Quick Start Guide

Read these instructions before using your Sure Cross® radios. Do not discard these instructions. For more detailed information about installing and using your Sure Cross products, download and read the instruction manual: Sure Cross Wireless I/O Network Manual (p/n 132607) or Sure Cross MultiHop Radio Instruction Manual (p/n 151317).

Set Up Your MultiHop Network

To set up and install your wireless MultiHop network, follow these steps:

1. If your radios have DIP switches, configure the DIP switches of all devices. For DIP switch configurations, refer to the product's datasheet.
2. Connect the sensors to the MultiHop radios if applicable. For available I/O, refer to the product's datasheet.
3. Apply power to all devices.
4. If your MultiHop radio has rotary dials, set the MultiHop Radio ID. If your MultiHop radio has no rotary dials, continue to the next step.
5. Form the wireless network by binding the server and repeater radios to the client radio.
6. Observe the LED behavior to verify the devices are communicating with each other.
7. Configure any I/O points to use the sensors connected to the Sure Cross devices.
8. Conduct a site survey between the MultiHop radios.
9. Install your wireless sensor network components.

For additional information, refer to one of the following documents:

- MultiHop Data Radio Quick Start Guide: 152653
- MultiHop Data Radio Instruction Manual: 151317
- MultiHop Register Guide: 155289

Configure the DIP Switches for Client, Repeater, or Server Mode

Before beginning operation, select one radio to be the client radio. Set the other MultiHop radios to operate as either repeaters (default setting) or servers.

1. Remove the top covers of the MultiHop radios.
2. Set one unit to be the client radio.
3. Set the other MultiHop radios to be repeaters or servers.
4. Set additional DIP switches now.

   (See the DIP switches section of your specific devices' datasheets for the positions and descriptions. Battery-powered radios may have different DIP switch settings than shown below.)

Device Settings	DIP Switches							
	1	2	3	4	5	6	7	8
Serial line baud rate 19200 OR User defined receiver slots	OFF [1]	OFF [1]						
Parity: None			OFF [1]	OFF [1]				
Transmit power 900 MHz radios: 1.00 Watt (30 dBm) 2.4 GHz radios: 0.065 Watts (18 dBm) and 60 ms frame					OFF [1]			
Application mode: Modbus						OFF [1]		
MultiHop radio setting: Repeater							OFF [1]	OFF [1]
MultiHop radio setting: Client							OFF	ON
MultiHop radio setting: Server							ON [2]	OFF [2]
MultiHop radio setting: Reserved							ON	ON

[1] Default configuration

[2] Default configuration for the E housing models only

Apply Power to the MultiHop Radio

Connecting power to the communication pins will cause permanent damage. For *Flex*Power devices, do not apply more than 5.5 V to the gray wire. The FlexPower radios will operate equally well when powered from the brown or gray wire. It is not necessary to supply both. The power for the sensors can be supplied by the radio's SPx terminals or from the 10 V DC to 30 V DC used to power the radio.

Original Instructions
23-Aug-24

© Banner Engineering Corp. All rights reserved.

152653_WEB
p/n: 152653_WEB Rev. D

ПРОМЭЛЕКТРОНИКА/ sales@prom-elec.com

	Pin	Wire Color	Models powered by 10 to 30 V dc with RS-485	FlexPower models with RS-485	FlexPower models with RS-232
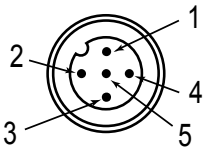	1	brown	10 V DC to 30 V DC	10 V DC to 30 V DC	10 V DC to 30 V DC
	2	white	RS-485 / D1 / B / +	RS-485 / D1 / B / +	RS-232 Tx
	3	blue	dc common (GND)	dc common (GND)	dc common (GND)
	4	black	RS-485 / D0 / A / -	RS-485 / D0 / A / -	RS-232 Rx
	5	gray	-	3.6 V DC to 5.5 V DC	3.6 V DC to 5.5 V DC

Bind a MultiHop Radio (with Rotary Dials)

To create your MultiHop network, bind the repeater and server radios to the designated client radio.

Before binding your radio, verify you have used the radio's rotary dials to assign a unique server ID to the radio.

1. Apply power to all MultiHop radios and place the MultiHop radios configured as servers or repeaters at least two meters away from the client radio.
2. Put the MultiHop client radio into binding mode.
   - For two-button client radios, triple-click button 2.
   - For one-button client radios, triple-click the button.

   For the two LED/button models, both LEDs flash red and the LCD shows *BINDNG and *client. For single LED/button models, the LED flashes alternatively red and green.
3. Put the MultiHop repeater or server radio into binding mode.
   - For two-button radios, triple-click button 2.
   - For one-button radios, triple-click the button.

   The child radio enters binding mode and searches for any client radio in binding mode. While searching for the client radio, the two red LEDs flash alternately. When the child radio finds the client radio and is bound, both red LEDs are solid for four seconds, then both red LEDs flash simultaneously four times. For M-GAGE Nodes, both colors of the single LED are solid (looks orange), then flash. After the server/repeater receives the binding code transmitted by the client, the server and repeater radios automatically exit binding mode.
4. Repeat step 3 for as many server or repeater radios as are needed for your network.
5. When all MultiHop radios are bound, exit binding mode on the client.
   - For two-button client radios, double-click button 2.
   - For one-button client radios, double-click the button.

   All radio devices begin to form the network after the client data radio exits binding mode.

Child Radios Synchronize to the Parent Radios

The synchronization process enables a Sure Cross® radio to join a wireless network formed by a client radio. After power-up, synchronization may take a few minutes to complete. First, all radios within range of the client data radio wirelessly synchronize to the client radio. These radios may be server radios or repeater radios.

After repeater radios are synchronized to the client radio, any radios that are not in sync with the client but can "hear" the repeater radio will synchronize to the repeater radios. Each repeater “family” that forms a wireless network path creates another layer of synchronization process. The table below details the process of synchronization with a parent. When testing the devices before installation, verify the radio devices are at least two meters apart or the communications may fail.

Server and Repeater LED Behavior

All bound radios set to server or repeater modes follow this LED behavior after powering up. The LEDs are located on the DXM's internal ISM radio,

		Two Button/LED Models		Single Button/LED Models
Process Steps	Response	LED 1	LED 2	LED
1	Power is supplied to the radio.	-	Solid amber (briefly)	Solid amber
2	The server/repeater searches for a parent device.	Flashes red	-	Flashes red (1 per 3 sec)
3	A parent device is detected. The server/repeater searches for other parent radios within range.	Solid red	-	Solid red
4	The server/repeater selects a suitable parent.	-	Solid amber	Solid amber
5	The server/repeater attempts to synchronize to the selected parent.	-	Solid red	Solid red
6	The server/repeater is synchronized to the parent.	Flashes green	-	Flashes green
7	The server/repeater enters RUN mode.	Solid green, then flashes green		Solid green, then flashes green

Continued on page 3

© Banner Engineering Corp. All rights reserved.

Continued from page 2

		Two Button/LED Models		Single Button/LED Models
Process Steps	Response	LED 1	LED 2	LED
	Serial data packets begin transmitting between the server/repeater and its parent radio.	-	Flashes amber	Flashes amber

Process Steps	Response	LED
1	Power is supplied to the radio.	Solid amber
2	The server/repeater searches for a parent device.	Flashes red (1 per 3 sec)
3	A parent device is detected. The server/repeater searches for other parent radios within range.	Solid red
4	The server/repeater selects a suitable parent.	Solid amber
5	The server/repeater attempts to synchronize to the selected parent.	Solid red
6	The server/repeater is synchronized to the parent.	Flashes green
7	The server/repeater enters RUN mode.	Solid green, then flashes green
	Serial data packets begin transmitting between the server/repeater and its parent radio.	Flashes amber

Client LED Behavior

All bound radios set to operate as clients follow this LED behavior after powering up.

		Two Button/LED Models		Single Button/LED Models
Process Steps	Response	LED 1	LED 2	LED
1	Power is supplied to the client radio	-	Solid amber	Solid amber
2	The client radio enters RUN mode.	Flashes green	-	Flashes green
	Serial data packets begin transmitting between the client and its children radios.	-	Flashes amber	Flashes amber

Conduct a Site Survey

A site survey analyzes the radio signal between a MultiHop child radio and its parent and reports the number of data packets missed or received at relative signal strengths.

Conduct a MultiHop Site Survey (from the LCD Menu System)

Perform the site survey before permanently installing your network to pre-screen a site for its radio communication potential, compare link quality in different locations in a factory, or assist with final antenna placement and aiming.

Site surveys can be conducted from either the client, repeater, or server radios. A client radio is always a parent and the server radios are always children radios within the radio communication relationship. A repeater radio, however, may be both a child radio to the client or another repeater and a parent radio to other repeater or server radios. For a more detailed description of the parent-child relationships, refer to the device datasheets.

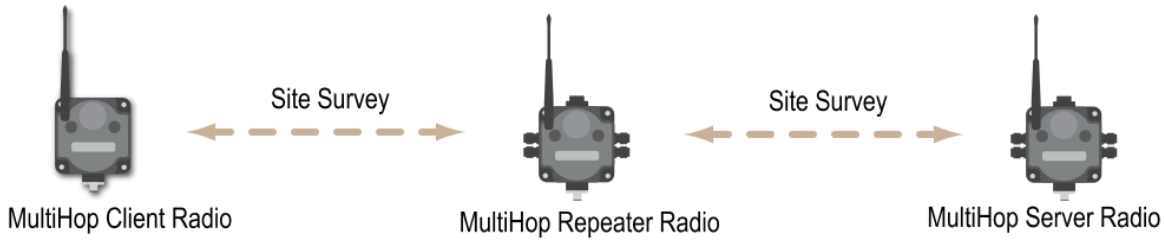

Other radios bound within the same network remain synchronized to the network, but are blocked from sending data while the site survey is running. The site survey analyzes the signal strength between the selected child and its parent radio only. Disable site survey on one radio before initiating it from another.

Radios in site survey mode have a solid green LED for the duration of the site survey and the LCD scrolls the results. Because the statistics represent the lesser of the round-trip results, one person can ascertain the link quality from either device.

Single-click button 2 to pause or resume autoscrolling the site survey results. While paused, button 1 single-step advances through the four signal strength categories: green, yellow, red, and missed. Double-click button 2 to exit the results display. (Refer to the datasheet for the menu structure.)

1. On a MultiHop radio, press button 1 until the display reads *SITE.

© Banner Engineering Corp. All rights reserved.

When the site survey runs, serial and I/O data radio communication between that parent and its children stops.

2. Single-click button 2 to enter the Site Survey menu.
   Client radio: The display reads CHLDRN. Repeater radio: The display reads PARENT. server radio: The display reads PARENT.
3. Select the MultiHop radio to analyze.

MultiHop Model	Select the radio to analyze:
From the client radio	Single-click button 2 to display the child radio's device address. (A radio's device address is displayed under its *RUN menu). Single click button 1 to scroll between all the client radio's children. When you reach the child radio you want to run the site survey with, single-click button 2.
From the repeater radio	Single-click button 1 to cycle between PARENT and CHLDRN. Single-click button 2 to select PARENT or CHLDRN. If conducting the site survey with one of the repeater's children, single-click button 1 to scroll among a repeater's child radios. (Each data radio's device address is displayed under its *RUN menu.) Single-click button 2 at the device address screen to select the child or parent and begin the site survey.
From the server radio	Single-click button 2 to display PARENT. Single-click button 2 to begin the site survey.

   The site survey begins. LED 2 on both the parent and child radios flash for every received RF packet. To indicate the parent is in site survey mode, LED 1 is a solid green. The data radio analyzes the quality of the signal between the parent and child by counting the number of data packets received and measuring the signal strength (green, yellow, and red).
4. Examine reception readings (G, Y, R, M) of the devices at various locations. M displays the percent of missed packets while G, Y, and R display the percent of received packets at those signal strengths. These values are continuously updated as long as the site survey is running.
   GRN = GREEN excellent signal strength; YEL = YELLOW good signal strength; RED = RED marginal signal strength; MIS = Percentage of missed packets. When possible, install all devices to optimize the percentage of YELLOW and GREEN data packets received.
5. While the site survey is in process, single-click button 2 to pause or resume autoscrolling the site survey results. While paused, button 1 single-step advances through the four signal strength categories: green, yellow, red, and missed. Double-click button 2 to exit the results display.
6. Double-click button 2 on either the child or the parent device.
   Site survey ends and the devices automatically resume operation.

Interpreting the MultiHop Site Survey Results

Site survey mode works by having two radios (one child and one parent) repeatedly exchange data packets. For every round-trip exchange of data, the child data radio keeps track of the weaker of the two paths. Both units report the statistics as a percentage on their LCD display.

The reports consists of sorting the data into one of four categories: Green, Yellow, Red, or Missed Packets.

- Green indicates strong signal,
- Yellow is less strong but still robust,
- Red means the packet was received but has a margin of less than 15 dB, and
- A missed packet means the data did not arrive or contained a checksum error. (During normal operation, missed packets are re-tried until they are received without errors. During a site survey, missed packets are not re-tried.)

For applications with only a few hops, the system can tolerate up to 40% missed packets without serious degradation, but situations with more missed packets should be reviewed for proper antenna selection and placement, cabling, and transmit power levels. If your application includes many hops, modify the installation and antenna placement to reduce the missed packet count.

Any radio can initiate a site survey. Other radios on the same network ID remain synchronized to the network, but are blocked from sending data while the site survey is running. In installations with multiple child radios, the site survey analyzes the signal strength between the selected child and its parent radio only. Disable site survey on one radio before initiating it from another.

Radios in site survey mode have a solid green LED for the duration of the site survey and the LCD display scrolls the results. Because the statistics represent the lesser of the round-trip results, one person can ascertain the link quality from either device.

Installing Your Sure Cross® Radios

Please refer to one of these instruction manuals to install your wireless network components.

- DX80 Performance Wireless I/O Network Instruction Manual: 132607
- MultiHop Data Radio Instruction Manual: 151317

© Banner Engineering Corp. All rights reserved.

MultiHop Configuration Software

Use Banner's MultiHop Configuration Software to view your MultiHop radio network and configure the radio and its I/O.

MultiHop Configuration Software Network and Device Overview screen

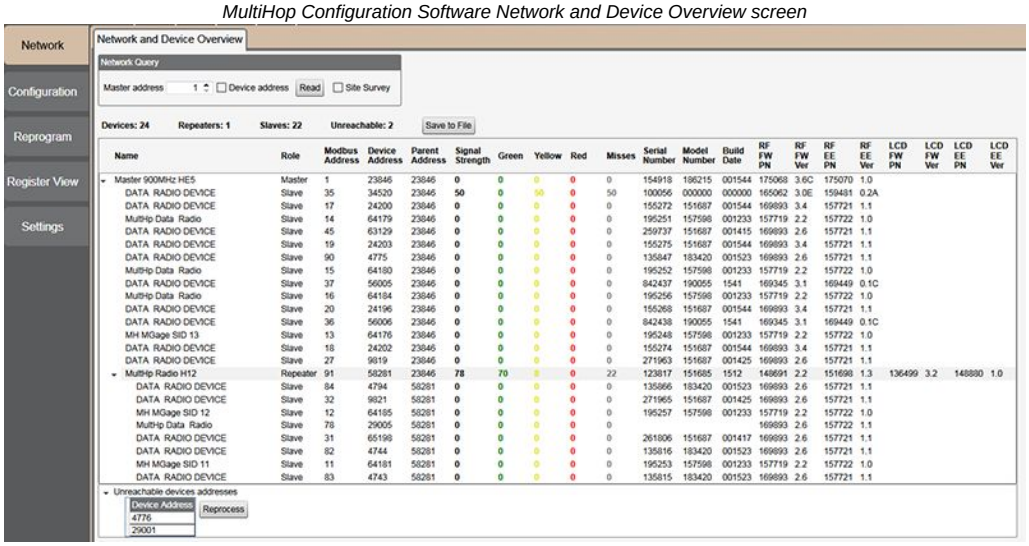

The software connects to a MultiHop client radio using one of four methods.

- Serial; using a USB to RS-485 (for RS-485 radios) or a USB to RS-232 (for RS-232 radios) converter cable.
- Modbus TCP; using an Ethernet connection to an Ethernet radio client.
- Serial DXM; using a USB cable to a DXM Controller to access a MultiHop client radio.
- TCP DXM: using an Ethernet connection to a DXM Controller to access a MultiHop client radio.

Banner recommends using **BWA-UCT-900**, an RS-485 to USB adapter cable with a wall plug that can power your radio while you configure it. The adapter cable is not required when connecting to a DXM Controller.

Download the most recent software revision from the Wireless Reference Library on Banner Engineering's website: www.bannerengineering.com.

© Banner Engineering Corp. All rights reserved.

Dimensions

MultiHop Radio, Low Profile Housing

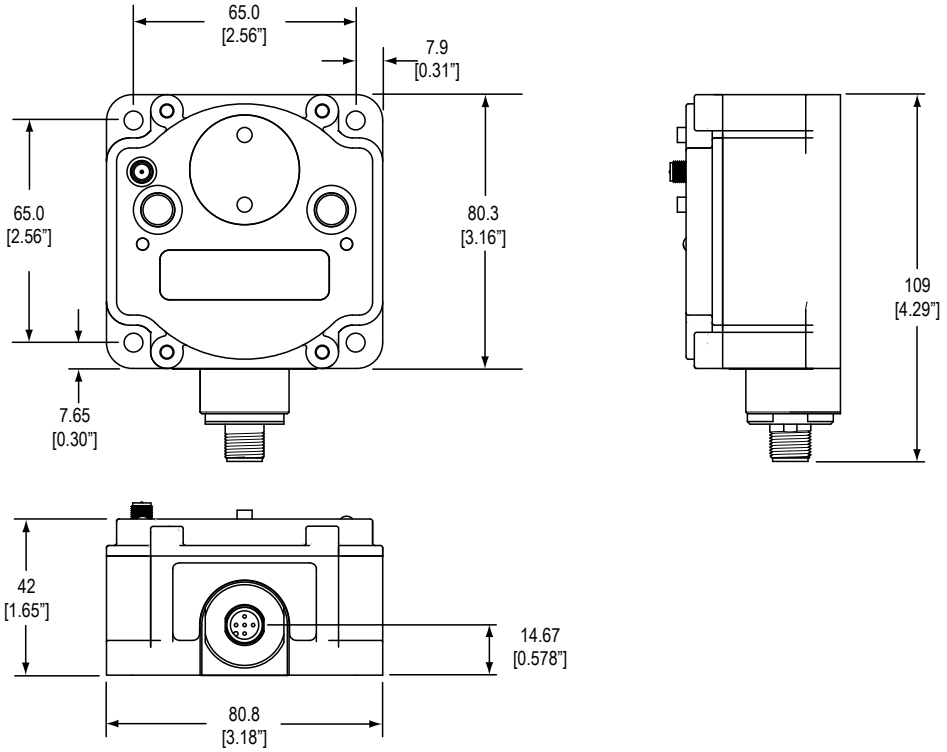

MultiHop Radio with I/O

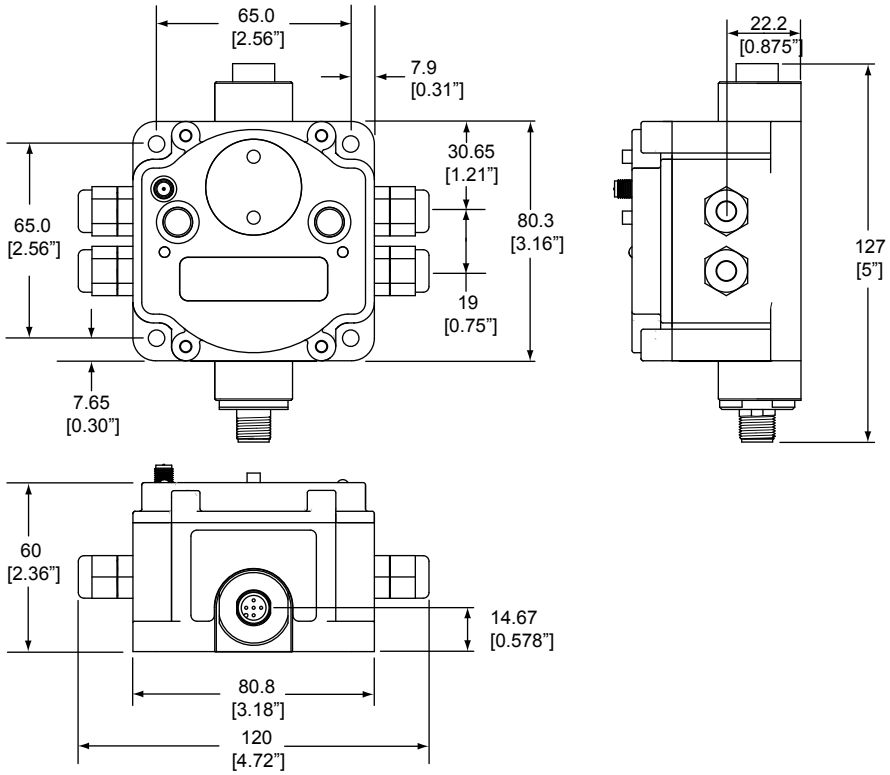

© Banner Engineering Corp. All rights reserved.

Warnings

WARNING:
- **Do not use this device for personnel protection**
- Using this device for personnel protection could result in serious injury or death.
- This device does not include the self-checking redundant circuitry necessary to allow its use in personnel safety applications. A device failure or malfunction can cause either an energized (on) or de-energized (off) output condition.

IMPORTANT: Please download the complete MultiHop Data Radio technical documentation, available in multiple languages, from www.bannerengineering.com for details on the proper use, applications, Warnings, and installation instructions of this device.

IMPORTANT: Por favor descargue desde www.bannerengineering.com toda la documentación técnica de los MultiHop Data Radio, disponibles en múltiples idiomas, para detalles del uso adecuado, aplicaciones, advertencias, y las instrucciones de instalación de estos dispositivos.

IMPORTANT: Veuillez télécharger la documentation technique complète des MultiHop Data Radio sur notre site www.bannerengineering.com pour les détails sur leur utilisation correcte, les applications, les notes de sécurité et les instructions de montage.

Install and properly ground a qualified surge suppressor when installing a remote antenna system. Remote antenna configurations installed without surge suppressors invalidate the manufacturer's warranty. Keep the ground wire as short as possible and make all ground connections to a single-point ground system to ensure no ground loops are created. No surge suppressor can absorb all lightning strikes; do not touch the Sure Cross® device or any equipment connected to the Sure Cross® device during a thunderstorm.

Exporting Sure Cross® Radios. It is our intent to fully comply with all national and regional regulations regarding radio frequency emissions. **Customers who want to re-export this product to a country other than that to which it was sold must ensure the device is approved in the destination country.** The Sure Cross wireless products were certified for use in these countries using the antenna that ships with the product. When using other antennas, verify you are not exceeding the transmit power levels allowed by local governing agencies. This device has been designed to operate with the antennas listed on Banner Engineering's website and having a maximum gain of 9 dBm. Antennas not included in this list or having a gain greater than 9 dBm are strictly prohibited for use with this device. The required antenna impedance is 50 ohms. To reduce potential radio interference to other users, the antenna type and its gain should be so chosen such that the equivalent isotropically radiated power (EIRP) is not more than that permitted for successful communication. Consult with Banner Engineering Corp. if the destination country is not on this list.

IMPORTANT:
- **Never operate a radio without connecting an antenna**
- Operating radios without an antenna connected will damage the radio circuitry.
- To avoid damaging the radio circuitry, never apply power to a Sure Cross® Performance or Sure Cross® MultiHop radio without an antenna connected.

IMPORTANT:
- **Electrostatic discharge (ESD) sensitive device**
- ESD can damage the device. Damage from inappropriate handling is not covered by warranty.
- Use proper handling procedures to prevent ESD damage. Proper handling procedures include leaving devices in their anti-static packaging until ready for use; wearing anti-static wrist straps; and assembling units on a grounded, static-dissipative surface.

Banner Engineering Corp Limited Warranty

Banner Engineering Corp. warrants its products to be free from defects in material and workmanship for one year following the date of shipment. Banner Engineering Corp. will repair or replace, free of charge, any product of its manufacture which, at the time it is returned to the factory, is found to have been defective during the warranty period. This warranty does not cover damage or liability for misuse, abuse, or the improper application or installation of the Banner product.

THIS LIMITED WARRANTY IS EXCLUSIVE AND IN LIEU OF ALL OTHER WARRANTIES WHETHER EXPRESS OR IMPLIED (INCLUDING, WITHOUT LIMITATION, ANY WARRANTY OF MERCHANTABILITY OR FITNESS FOR A PARTICULAR PURPOSE), AND WHETHER ARISING UNDER COURSE OF PERFORMANCE, COURSE OF DEALING OR TRADE USAGE.

This Warranty is exclusive and limited to repair or, at the discretion of Banner Engineering Corp., replacement. **IN NO EVENT SHALL BANNER ENGINEERING CORP. BE LIABLE TO BUYER OR ANY OTHER PERSON OR ENTITY FOR ANY EXTRA COSTS, EXPENSES, LOSSES, LOSS OF PROFITS, OR ANY INCIDENTAL, CONSEQUENTIAL OR SPECIAL DAMAGES RESULTING FROM ANY PRODUCT DEFECT OR FROM THE USE OR INABILITY TO USE THE PRODUCT, WHETHER ARISING IN CONTRACT OR WARRANTY, STATUTE, TORT, STRICT LIABILITY, NEGLIGENCE, OR OTHERWISE.**

Banner Engineering Corp. reserves the right to change, modify or improve the design of the product without assuming any obligations or liabilities relating to any product previously manufactured by Banner Engineering Corp. Any misuse, abuse, or improper application or installation of this product or use of the product for personal protection applications when the product is identified as not intended for such purposes will void the product warranty. Any modifications to this product without prior express approval by Banner Engineering Corp will void the product warranties. All specifications published in this document are subject to change; Banner reserves the right to modify product specifications or update documentation at any time. Specifications and product information in English supersede that which is provided in any other language. For the most recent version of any documentation, refer to: www.bannerengineering.com.

For patent information, see www.bannerengineering.com/patents.

© Banner Engineering Corp. All rights reserved.