Product Line Specifications

BANNER®

the photoelectric specialist

Q85 Series Sensors

Self-contained ac/dc and dc-only sensors with e/m relay or solid-state output and optional timing logic

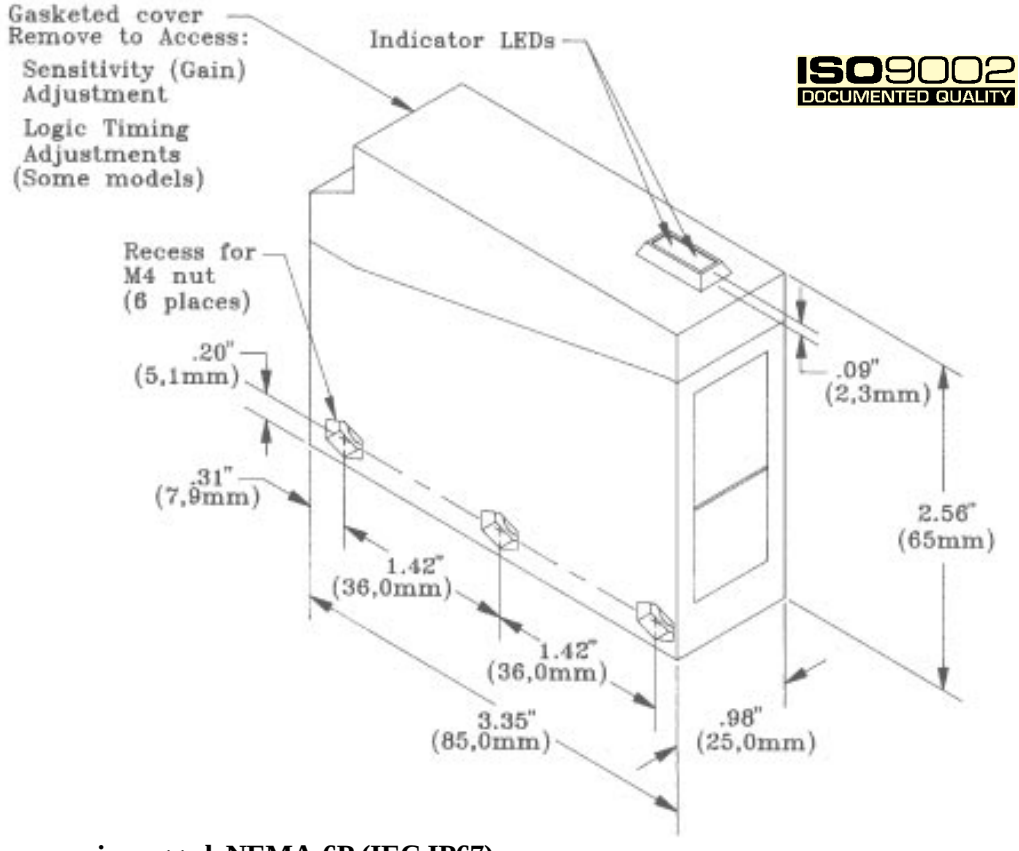

- **Economical sensors in rugged, NEMA-6P (IEC IP67) Cycolac® ABS housings; totally self-contained**
- **Models for 24 to 240V ac/12 to 240V dc with SPDT e/m relay or SPST solid-state output**
- **Models for 10 to 48V dc with solid-state NPN sinking and PNP sourcing outputs (switchable light/dark operate); special low-saturation sinking output for interfacing to TTL also provided**
- **Available with either basic on/off output or eight-function programmable timing logic**
- **Wiring chamber with two conduit entrances for wiring ease and mounting versatility**
- **LED indicators for OUTPUT ON and LIGHT SENSED (AID™ signal strength indicator system; see text)**
- **Models for opposed, short-range and long-range diffuse, and polarized retroreflective sensing modes**

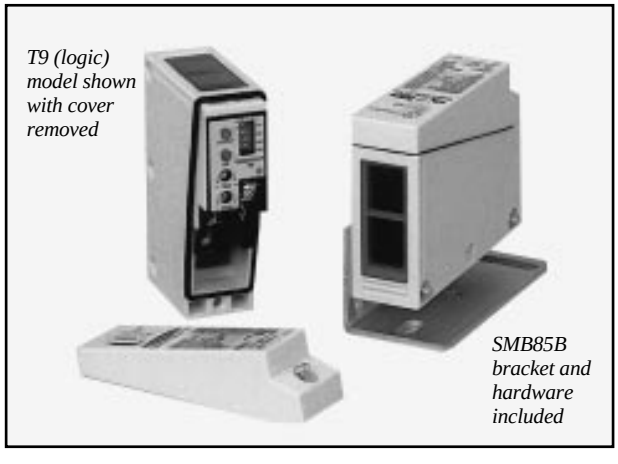

Printed in USA *P/N 32891A5A*

ПРОМЭЛЕКТРОНИКА/ sales@prom-elec.com

Q85 Series Sensors

Q85s are compact, economical, photoelectric sensors in rugged NEMA-6P rated ABS housings. They are ideally suited for conveyor control and similar applications. The timing logic functions offered in the "T9" models provide additional control capabilities over and above the ON/OFF (no delay) function of the basic models. Q85 Series sensors are available for the opposed, diffuse, and polarized retroreflective sensing modes. The special lens of the Q85 polarized retroreflective sensor polarizes the emitted light and filters out unwanted reflections, allowing its use in many applications that are otherwise unsuited to retroreflective sensing. All Q85 sensors feature a convenient wiring chamber with two conduit entrances for ease of wiring, positioning, and mounting.

Q85 Series sensors are available in models to operate either from 24-240V ac/12-240V dc or from 10-48V dc. AC/DC models are available with either an SPDT electromechanical output relay or an SPST solid-state switch. **Q85VR3 Series** electromechanical relay models are capable of switching 250V ac, 30V dc, 3 amps (maximum values, resistive load). **Q85BW13 Series** ac/dc solid-state output models switch up to 250V ac, 250V dc, 300 mA maximum.

Q85BB62 Series 10-48V dc-only models have switchable light/dark operate solid-state NPN (current sinking) and PNP (current sourcing) outputs, each capable of 150 mA maximum continuous load. Also included on dc-only models is an alternative low-saturation NPN output specially designed for direct interfacing to TTL and similar circuitry.

Q85 Series sensors are available with a choice of either ON/OFF or programmable timing output logic. Models with programmable timing logic ("T9" models) provide eight switch-selectable logic functions: ON/OFF (no delay), ON delay, OFF delay, ON/OFF delay, one-shot (pulse), on-delayed one-shot, limit timer, and on-delayed limit timer. The adjustable time range for delay functions and pulse length is 0.1 to 5 seconds (see pages 6 and 7).

Two top-mounted LED indicators are provided. A red indicator (Banner's exclusive, patented AID™ system*) lights whenever the sensor "sees" its modulated light source, and pulses at a rate proportional to the strength of the received light signal. A yellow output indicator lights whenever the Q85's output is energized.

Q85 Series sensors have rugged yellow Cycolac® ABS housings with ultrasonically-welded acrylic lenses. A gasketed ABS cover protects the wiring chamber and the timing and sensitivity adjustment controls. Two 1/2-14 NPSM conduit entrances are provided; a plug and gasket are included for sealing a possible unused entrance.

Q85 Series sensors are rated NEMA 1, 2, 3, 3S, 4, 4X, 6, 6P, 12, and 13 (IEC IP67). An 11-gauge plated steel mounting bracket and two plated mounting bolts and nuts (cover photo and drawing, page 5) are included.



Model listings and optical performance data are given on page 3. Complete specifications for Q85 sensors appear on pages 4 and 5. See pages 6 and 7 for hookup and logic programming information.

Generalized Features, Q85 Series Sensors

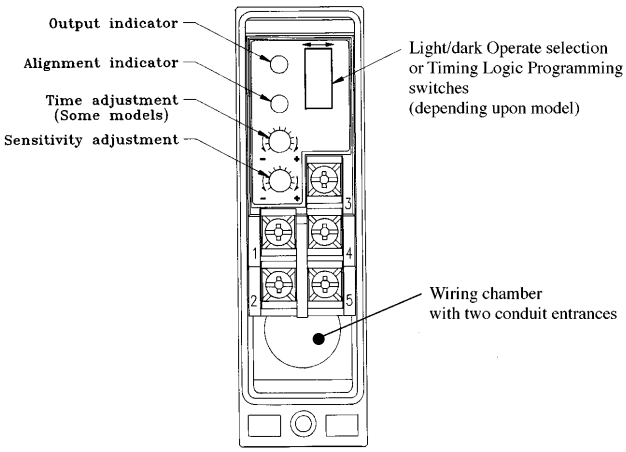

Cycolac® is a registered trademark of General Electric Co.

*Alignment Indicating Device system, US patent number 4356393

WARNING... Q85 Series photoelectric presence sensors do NOT include the self-checking redundant circuitry necessary to allow their use in personnel safety applications. A sensor failure or malfunction can result in *either* an energized or a de-energized sensor output condition.

Never use these products as sensing devices for personnel protection. Their use as a safety device may create an unsafe condition which could lead to serious injury or death. Only MACHINE-GUARD and PERIMETER-GUARD Systems, and other systems so designated, are designed to meet OSHA and ANSI machine safety standards for point-of-operation guarding devices. No other Banner sensors or controls are designed to meet these standards, and they must NOT be used as sensing devices for personnel protection.

Q85 Series Sensors: Optical Performance and Model Listing

Opposed Mode

Sensing range: 75 feet (23 meters)
Sensing beam: 680 nanometers, visible red
Effective beam diameter: 0.38 inches (9,6 mm)

Models for 24-240V ac/12-240V dc, SPDT electromechanical relay:

Q853E emitter	31648; use with either receiver, below
Q85VR3R receiver	31651; SPDT e/m relay, on/off output
Q85VR3R-T9 receiver	31650; SPDT e/m relay, programmable timer

Models for 24-240V ac/12-240V dc, SPST solid-state switch:

Q853E emitter	31648; use with either receiver, below
Q85BW13R receiver	35572; solid-state, on/off output
Q85BW13R-T9 receiver	35571; solid-state, programmable timer

Models for 10-48V dc, solid-state sinking and sourcing outputs :

Q8562E emitter	34262; use with either receiver, below
Q85BB62R receiver	34264; solid-state, on/off output
Q85BB62R-T9 receiver	34265; solid-state, programmable timer

Excess Gain Curve

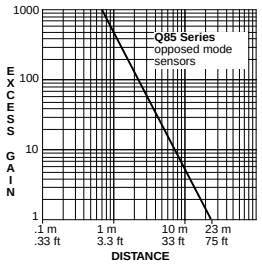

Beam Pattern

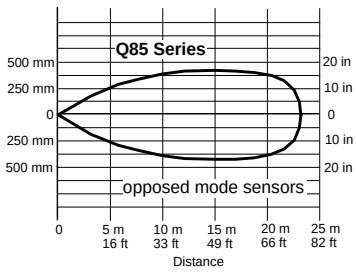

Polarized Retroreflective Mode

Sensing range: 3 inches (8 cm) to 15 feet (4,6 m)
when used with Banner model BRT-3 3-inch retroreflective target
Sensing beam: 680 nanometers, visible red (polarized)

Models for 24-240V ac/12-240V dc, SPDT electromechanical relay:

Q85VR3LP	31213; SPDT e/m relay, on/off output
Q85VR3LP-T9	30872; SPDT e/m relay, programmable timer

Models for 24-240V ac/12-240V dc, SPST solid-state switch:

Q85BW13LP	35564; solid-state, on/off output
Q85BW13LP-T9	35563; solid-state, programmable timer

Models for 10-48V dc, solid-state sinking and sourcing outputs :

Q85BB62LP	34255; solid-state, on/off output
Q85BB62LP-T9	34254; solid-state, programmable timer

Excess Gain Curve

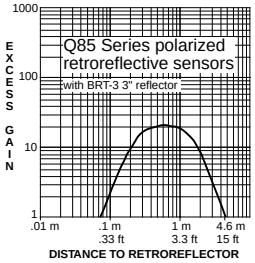

Beam Pattern

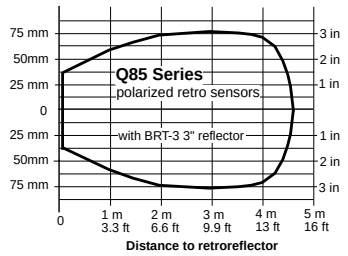

Short-range Diffuse Mode

Sensing range: 10 inches (250 millimeters)
referenced to a 90% reflectance white test card
Sensing beam: 880 nanometers, infrared

Models for 24-240V ac/12-240V dc, SPDT electromechanical relay:

Q85VR3D	31655; SPDT e/m relay, on/off output
Q85VR3D-T9	31654; SPDT e/m relay, programmable timer

Models for 24-240V ac/12-240V dc, SPST solid-state switch:

Q85BW13D	35576; solid-state, on/off output
Q85BW13D-T9	35575; solid-state, programmable timer

Models for 10-48V dc, solid-state sinking and sourcing outputs:

Q85BB62DL	34269; solid-state, on/off output
Q85BB62DL-T9	34268; solid-state, programmable timer

Excess Gain Curve

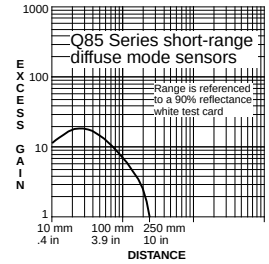

Beam Pattern

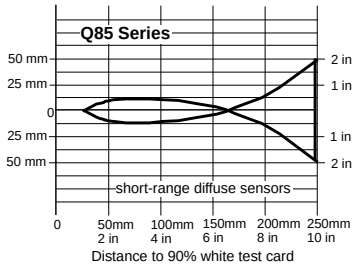

Long-range Diffuse Mode

Sensing range: 39 inches (1 meter)
referenced to a 90% reflectance white test card
Sensing beam: 880 nanometers, infrared

Models for 24-240V ac/12-240V dc, SPDT electromechanical relay:

Q85VR3DL	31539; SPDT e/m relay, on/off output
Q85VR3DL-T9	31537; SPDT e/m relay, programmable timer

Models for 24-240V ac/12-240V dc, SPST solid-state switch:

Q85BW13DL	35568; solid-state, on/off output
Q85BW13DL-T9	35567; solid-state, programmable timer

Models for 10-48V dc, solid-state sinking and sourcing outputs:

Q85BB62DL	34259; solid-state, on/off output
Q85BB62DL-T9	34258; solid-state, programmable timer

Excess Gain Curve

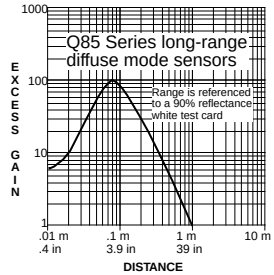

Beam Pattern

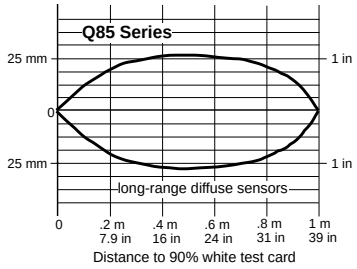

Q85 Series Sensors

Specifications, Q85VR3x Models

(24-240V ac or 12 to 240V dc, electromechanical output)

Sensing range: See sensor descriptions by mode (page 3).

Sensing beam: See sensor descriptions by mode (page 3).

Supply voltage: 24 to 240V ac, 50/60 Hz or 12 to 240V dc (2 watts maximum). No polarity for power supply hookup.

Outputs (all models except emitters):
Q85VR3x models = SPDT e/m relay, on/off output
Q85VR3x-T9 models = SPDT e/m relay, programmable timer

Output relay specifications:
Maximum switching power (resistive load): 90W, 750VA. Install transient suppressor (MOV) across contacts switching inductive loads.
Maximum switching voltage (resistive load): 250V ac or 30V dc.
Maximum switching current (resistive load): 3A.
Minimum voltage and current: 5V dc, 10 mA.
Mechanical life: 50,000,000 operations.
Electrical life at full resistive load: 100,000 operations.
Maximum switching speed: 25 operations per second.
Closure time (no timing logic in use): 20 milliseconds max.
Release time (no timing logic in use): 20 milliseconds max.
Repeatability (no timing logic in use): 1 millisecond.

All sensors are protected against false pulse on power-up. (False pulse protection circuit causes a 100 millisecond delay on power-up.) Models are available with either ON/OFF output or 8 switch-selectable output timing functions ("T9" model suffix).

Adjustments (all models except emitters):
Single-turn SENSITIVITY control potentiometer, accessible beneath the ABS wiring chamber cover. Timing logic (for T9 models) is configured at a DIP switch. Pulse length and delay are set by a single-turn potentiometer (under the wiring chamber cover). The adjustable time range for both functions is 0.1 to 5 seconds; both functions are automatically set to the same value. See page 6.

Response Time and Repeatability are independent of signal strength: see output relay specs. (above).

Status Indicators (all models except emitters):
Two LEDs, one red and one yellow, both top-mounted.
Red AID™ system (Alignment Indicating Device, US patent #4356393) LED lights whenever the sensor "sees" its own modulated light, and pulses at a rate proportional to the strength of the light signal.
Yellow indicator lights whenever the sensor's output is energized.

Construction: Yellow Cycolac® ABS housing, plated steel hardware. Acrylic lens. ABS cover for wiring/adjustments access. Rated NEMA 1, 2, 3, 3S, 4, 4X, 6, 6P, 12, and 13; IEC IP67. It is the customer's responsibility to maintain NEMA 6P integrity at the conduit entrance(s) in use. Maximum wire size (for connection to wiring terminals) is #14 AWG.

Vibration and Mechanical Shock: meets Mil. Std. 202F requirements. Method 201A (Vibration: frequency 10 to 55 Hz. max., double-amplitude 0.06-inch, maximum acceleration 10G). Method 213B Conditions H & I (Shock: 75G with unit operating; 100G for non-operation).

Operating temperature range: -25° to +55°C (-13° to +131°F).

Maximum relative humidity: 90% at 50°C (non-condensing).

Specifications, Q85BW13x Models

(24 to 240V ac/12 to 240V dc, solid-state output)

Sensing range: See sensor descriptions by mode (page 3).

Sensing beam: See sensor descriptions by mode (page 3).

Supply voltage: 24 to 240V ac (50/60 Hz) or 12 to 240V dc (2 watts maximum). No polarity for power supply hookup.

Outputs (all models except emitters):
Q85BW13x models = optically isolated solid-state switch (as described below), on/off output
Q85BW13x-T9 models = optically isolated solid-state switch (as described below), programmable timer

Optically-isolated SPST solid-state switch:
Maximum ratings: 250V ac, 250V dc, 300 mA.
Output saturation voltage: 3V at 300 mA, 2V at 15 mA.
Output leakage curent: <50 microamps.
Inrush current: 1 amp for 20 milliseconds, non-repetetive.
This output is not short-circuit protected.
Exercise care when making wiring connections.

All sensors are protected against false pulse on power-up: false pulse protection circuit causes a 100 millisecond delay on power-up. Models are available with either ON/OFF output or 8 switch-selectable output timing functions ("T9" model suffix).

Adjustments (all models except emitters):
Single-turn SENSITIVITY control potentiometer, accessible beneath the ABS wiring chamber cover. Timing logic (for T9 models) is configured at a DIP switch. Pulse length and delay are set by a single-turn potentiometer (under the wiring chamber cover). The adjustable time range for both functions is 0.1 to 5 seconds; both functions are automatically set to the same value. All models have a light/dark operate switch.

Response Time and Repeatability are independent of signal strength:

Q85BW13R	response time 6 ms on/3 ms off, repeatability 750 µs
Q85BW13R-T9*	response time 12 ms on/9 ms off , repeatability 1 ms
Q85BW13LP	response time 4 ms on/4 ms off, repeatability 1 ms
Q85BW13LP-T9*	response time 10 ms on/10 ms off, repeatability 1 ms
Q85BW13D	response time 4 ms on/4 ms off, repeatability 1 ms
Q85BW13D-T9*	response time 10 ms on/10 ms off, repeatability 1 ms
Q85BW13DL	response time 4 ms on/4 ms off, repeatability 1 ms
Q85BW13DL-T9*	response time 10 ms on/ 10 ms off, repeatability 1 ms

*on/off operation (no timing in use)

Status Indicators (all models except emitters):
LEDs, one red and one yellow, both top-mounted.
Red AID™ system (Alignment Indicating Device, US patent #4356393) indicator LED lights whenever the sensor "sees" its own modulated light, and pulses at a rate proportional to the strength of the received light signal.
Yellow indicator lights whenever the sensor's output is conducting.

Construction: Yellow Cycolac® ABS housing, plated steel hardware. Acrylic lens. ABS cover for wiring/adjustments access. Rated NEMA 1, 2, 3, 3S, 4, 4X, 6, 6P, 12, and 13; IEC IP67. It is the customer's responsibility to maintain NEMA 6P integrity at the conduit entrance(s) in use. Maximum wire size (for connection to wiring terminals) is #14 AWG.

Vibration and Mechanical Shock: meets Mil. Std. 202F requirements. Method 201A (Vibration: frequency 10 to 55 Hz. max., double-amplitude 0.06-inch, maximum acceleration 10G). Method 213B Conditions H & I (Shock: 75G with unit operating; 100G for non-operation).

Operating temperature range: -25° to +55°C (-13° to +131°F).

Maximum relative humidity: 90% at 50°C (non-condensing).

Q85 Series Sensors

Specifications, Q85BB62x Models

(10 to 48V dc, solid-state output)

Sensing range: See sensor descriptions by mode (page 3).

Sensing beam: See sensor descriptions by mode (page 3).

Supply voltage: 10 to 48V dc at 50 mA max., exclusive of load; Q8562E emitter requires 25 mA. All models reverse-polarity protected.

Outputs (all models except emitters):

Q85BB6x models = NPN sinking and PNP sourcing outputs (as described below), on/off output

Q85BB6x-T9 models = NPN sinking and PNP sourcing outputs (as described below), programmable timer

Standard outputs are solid-state, one NPN (sinking), one PNP (sourcing); 150 mA max. (at 25˚C, either output). Derate output by 1 mA/˚C above 25˚C. Leakage current <1 µA (off-state). Output saturation voltage <1V at 10 mA and <2V at 150 mA. Standard outputs reverse-polarity, overload, and short-circuit protected. The two standard outputs may be used simultaneously (max. load 150 mA each output).

Low-saturation voltage alternative NPN (sinking) output is provided for easy interfacing to TTL and similar circuitry. Output saturation voltage <200 millivolts at 10 mA and <1V at 150 mA. Maximum load 150 mA (derate by 1 mA/˚C above 25˚C). Overload and short circuit protected. *This output is not reverse polarity protected. Exercise care to ensure correct polarity of the load hookup when making wiring connections.*

All sensors are protected against false pulse on power-up. (False pulse protection circuit causes a 100 millisecond delay on power-up.)

Models are available with either ON/OFF output or 8 switch-selectable output timing functions ("T9" model suffix); see page 7.

Adjustments (all models except emitters):

Single-turn SENSITIVITY control potentiometer, accessible beneath the ABS wiring chamber cover. Timing logic (for T9 models) is configured at a DIP switch. Pulse length and delay are set by a single-turn potentiometer (under the wiring chamber cover). The adjustable time range for both functions is 0.1 to 5 seconds; both functions are automatically set to the same value. All models have a light/dark operate switch.

Response Time and Repeatability are independent of signal strength:

Q85BB62R	response time 1 ms, repeatability 125 µs
Q85BB62R-T9*	response time 8 ms, repeatability 1 ms
Q85BB62LP	response time 1 ms, repeatability 250 µs
Q85BB62LP-T9*	response time 8 ms, repeatability 1 ms
Q85BB62D	response time 1 ms, repeatability 250 µs
Q85BB62D-T9*	response time 8 ms, repeatability 1 ms
Q85BB62DL	response time 2 ms, repeatability 500 µs
Q85BB62DL-T9*	response time 8 ms, repeatability 1 ms

*on/off operation (no timing in use)

Status Indicators (all models except emitters):

LEDs, one red and one yellow, both top-mounted.

Red AID™ system (Alignment Indicating Device, US patent #4356393) indicator LED lights whenever the sensor "sees" its own modulated light, and pulses at a rate proportional to the strength of the received light signal. **Yellow** indicator lights whenever the sensor's output is energized.

Construction: Yellow Cycolac® ABS housing, plated steel hardware. Acrylic lens. ABS cover for wiring/adjustments access. Rated NEMA 1, 2, 3, 3S, 4, 4X, 6, 6P, 12, and 13; IEC IP67. It is the customer's responsibility to maintain NEMA 6P integrity at the conduit entrance(s) in use. Max. wire size (for connection to wiring terminals) is #14 AWG.

Vibration and Mechanical Shock: meets Mil. Std. 202F requirements. Method 201A (Vibration: frequency 10 to 55 Hz. max., double-amplitude 0.06-inch, maximum acceleration 10G). Method 213B Conditions H & I (Shock: 75G with unit operating; 100G for non-operation).

Operating temperature range: -25° to +55°C (-13° to +131°F).

Maximum relative humidity: 90% at 50°C (non-condensing).

Dimensions, Q85 Series Sensors (all models)

Top view

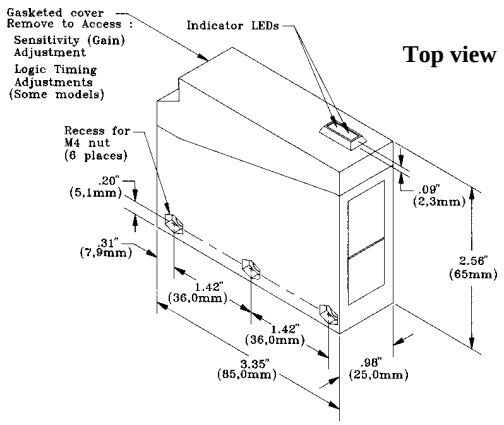

Bottom view

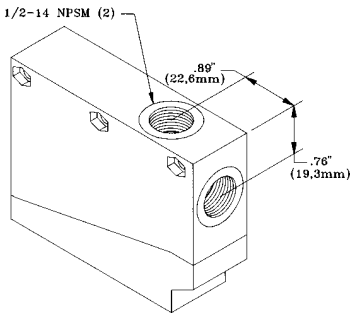

Shown with SMB85B mounting bracket (included)

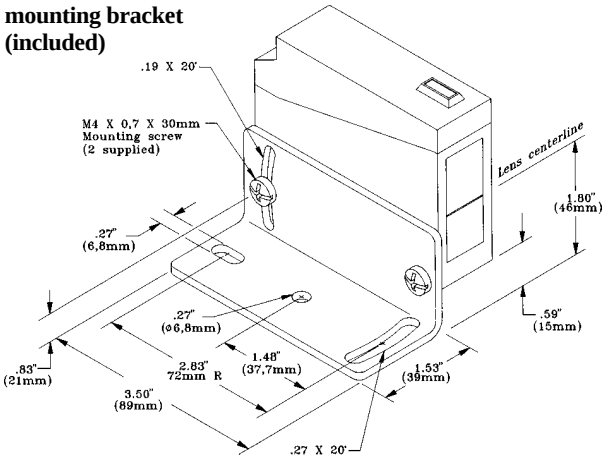

Shown with SMB85R mounting bracket (p/n 32798, order separately)

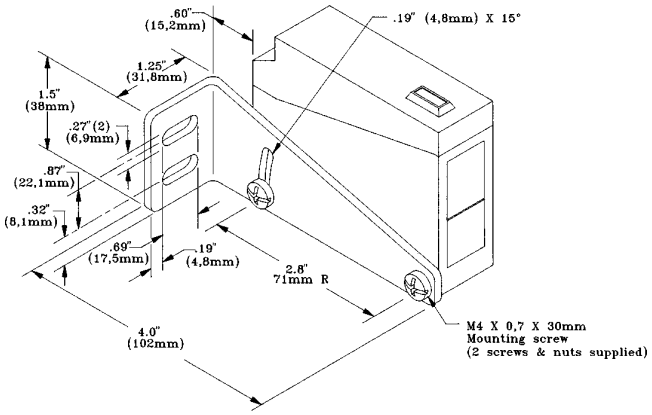

Q85 Series dc Sensors

Q85BB62x Series Hookup and Timing Logic Selection (solid-state output, 10-48V dc)

The output timing logic function (on sensor models with T9 model number suffix) is selected at the *timing logic programming switches*, according to the table (below). The output timing logic delays are set at the single-turn *time adjustment* potentiometer. When the timing function involves more than one time (as in ON and OFF delay, ON-delayed one-shot, and ON-delayed limit timer functions), the potentiometer sets both times to the same value between 0.1 and 5 seconds.

Logic function	Switch:	SW1	SW2	SW3
ON and OFF delays (both)		0	0	0
ON delay (only)		0	0	1
OFF delay (only)		0	1	0
No delays		0	1	1
ON delayed one-shot		1	0	0
ON delayed limit timer		1	0	1
One-shot		1	1	0
Limit timer		1	1	1

With the *light/dark operate switch* (all models) set to **light operate (L.O.)**, the sensor's outputs are energized when the sensor sees its own modulated light source (after any ON delay). In the **dark operate (D.O.)** position, the outputs are energized when the sensor does not see its modulated light source (after any ON delay). **Sensor sensitivity** is set at the single-turn *sensitivity* adjustment potentiometer.

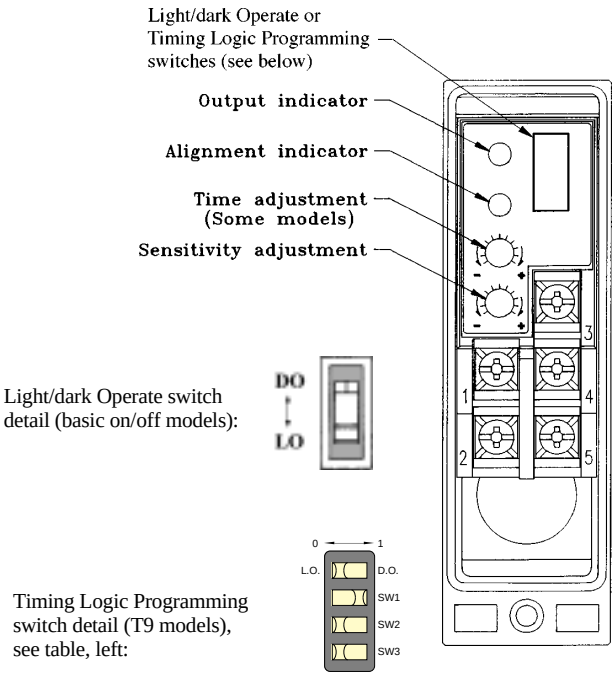

Hookup to dc power and the external load is made at the five screw terminals inside the wiring chamber.
DC power is connected at terminals #1 and #2. The three types of load hookup are diagrammed below.
Maximum continuous load in any hookup is 150 mA (derate per data in *Specifications* section).
Q8562E emitter hookup: +10 to 30V dc at terminal #1, dc common at terminal #2.

Standard Sinking (NPN) Hookup

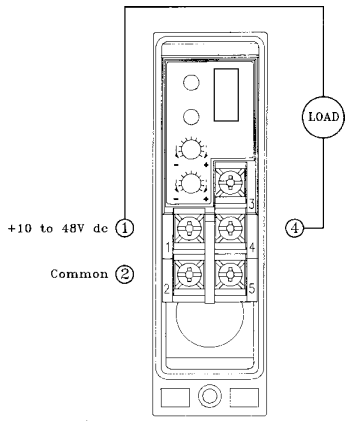

Connect dc power to the sensor at terminals #1 and #2. Power connections are reverse-polarity protected.

Connect the load between terminals #1 and #4.

Maximum continuous load is 150 mA.

Standard NPN and *standard* PNP hookups **may** be used simultaneously (maximum load is 150 mA each output).

Alternative Low Saturation Sinking (NPN) Hookup*

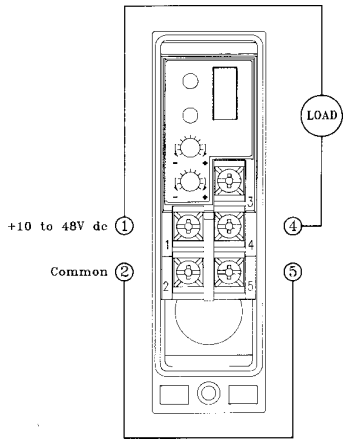

This hookup provides direct interfacing to TTL and similar circuits. Connect dc power at terminals #1 and #2. Power connections are reverse-polarity protected.

Connect the load between terminals #1 and #4. Connect a jumper between terminals #2 and #5. ***In this wiring configuration, the load hookup is NOT reverse-polarity protected. Double-check all wiring before applying power!**

Maximum continuous load is 150 mA.

Standard Sourcing (PNP) Hookup

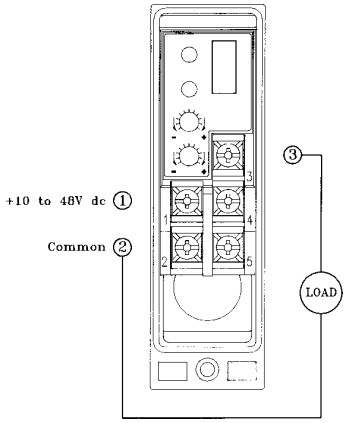

Connect dc power to the sensor at terminals #1 and #2. Power connections are reverse-polarity protected.

Connect the load between terminals #2 and #3.

Maximum continuous load is 150 mA.

Standard NPN and *standard* PNP hookups **may** be used simultaneously (maximum load is 150 mA each output).

Q85 Series ac/dc Sensors

Q85VR3x Series Hookup and Timing Logic Selection

(electromechanical relay output, 24-240V ac/12-240V dc)

Hookup to voltage supply and external load is made at the five terminals inside the wiring chamber (see drawing). There is no polarity for voltage supply hookup. Output is an SPDT electromechanical relay.

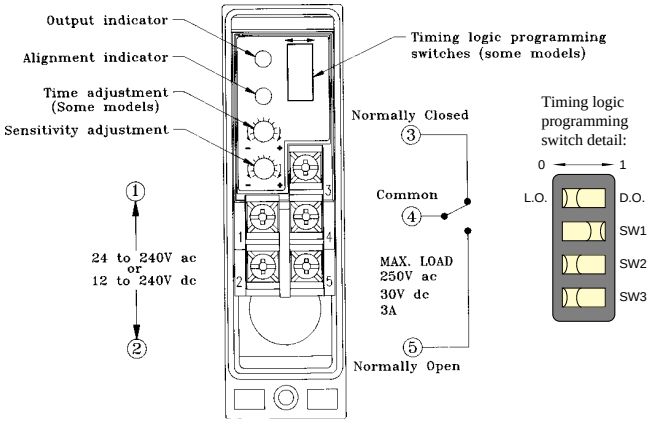

The **output timing logic function (on sensor models with T9 model number suffix)** is selected at the *timing logic programming switches*, according to the table (right). The output timing logic delays are set at the single-turn *time adjustment* potentiometer. When the timing function involves more than one time (as in ON and OFF delay, ON-delayed one-shot, and ON-delayed limit timer functions), the potentiometer sets both times to the same value between 0.1 and 5 seconds.

Logic function	Switch:	SW1	SW2	SW3
ON and OFF delays (both)		0	0	0
ON delay (only)		0	0	1
OFF delay (only)		0	1	0
No delays		0	1	1
ON delayed one-shot		1	0	0
ON delayed limit timer		1	0	1
One-shot		1	1	0
Limit timer		1	1	1

With the *light/dark operate switch* (T9 models) set to **light operate (L.O.)**, the sensor's electromechanical output relay is energized when the sensor sees its modulated light source (after any ON delay). In the **dark operate (D.O.)** position, the output is energized when the sensor does not see its modulated light source (after any ON delay).

Sensor sensitivity is set at the single-turn *sensitivity* adjustment potentiometer.

Q85BW13x Series Timing Logic Selection and Hookup

(solid-state relay output, 24-240V ac/12-240V dc)

The output timing logic function (on sensor models with T9 model number suffix) is selected at the *timing logic programming switches*, according to the table (below). The output timing logic delays are set at the single-turn *time adjustment* potentiometer. When the timing function involves more than one time (as in ON and OFF delay, ON-delayed one-shot, and ON-delayed limit timer functions), the potentiometer sets both times to the same value between 0.1 and 5 seconds.

Logic function	Switch:	SW1	SW2	SW3
ON and OFF delays (both)		0	0	0
ON delay (only)		0	0	1
OFF delay (only)		0	1	0
No delays		0	1	1
ON delayed one-shot		1	0	0
ON delayed limit timer		1	0	1
One-shot		1	1	0
Limit timer		1	1	1

With the *light/dark operate switch* (all models) set to **light operate (L.O.)**, the sensor's output is energized when the sensor sees its own modulated light source (after any ON delay). In the **dark operate (D.O.)** position, the output is energized when the sensor does not see its modulated light source (after any ON delay). **Sensor sensitivity** is set at the single-turn *sensitivity* adjustment potentiometer.

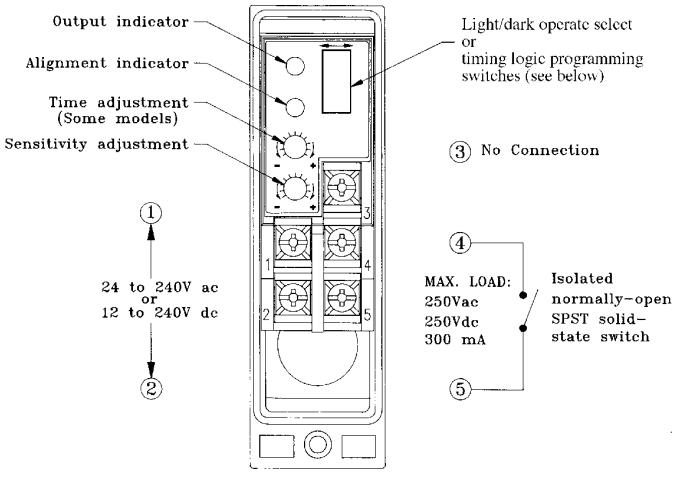

Light/dark Operate switch detail (basic on/off models):



Timing Logic Programming switch detail (T9 models), see table (left):

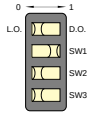



WARRANTY: Banner Engineering Corporation warrants its products to be free from defects for one year. Banner Engineering Corporation will repair or replace, free of charge, any product of its manufacture found to be defective at the time it is returned to the factory during the warranty period. This warranty does not cover damage or liability for the improper application of Banner products. This warranty is in lieu of any other warranty either expressed or implied.

Banner Engineering Corp. 9714 10th Avenue No., Minneapolis, MN 55441 Telephone: (612) 544-3164 FAX (applications): (612) 544-3573