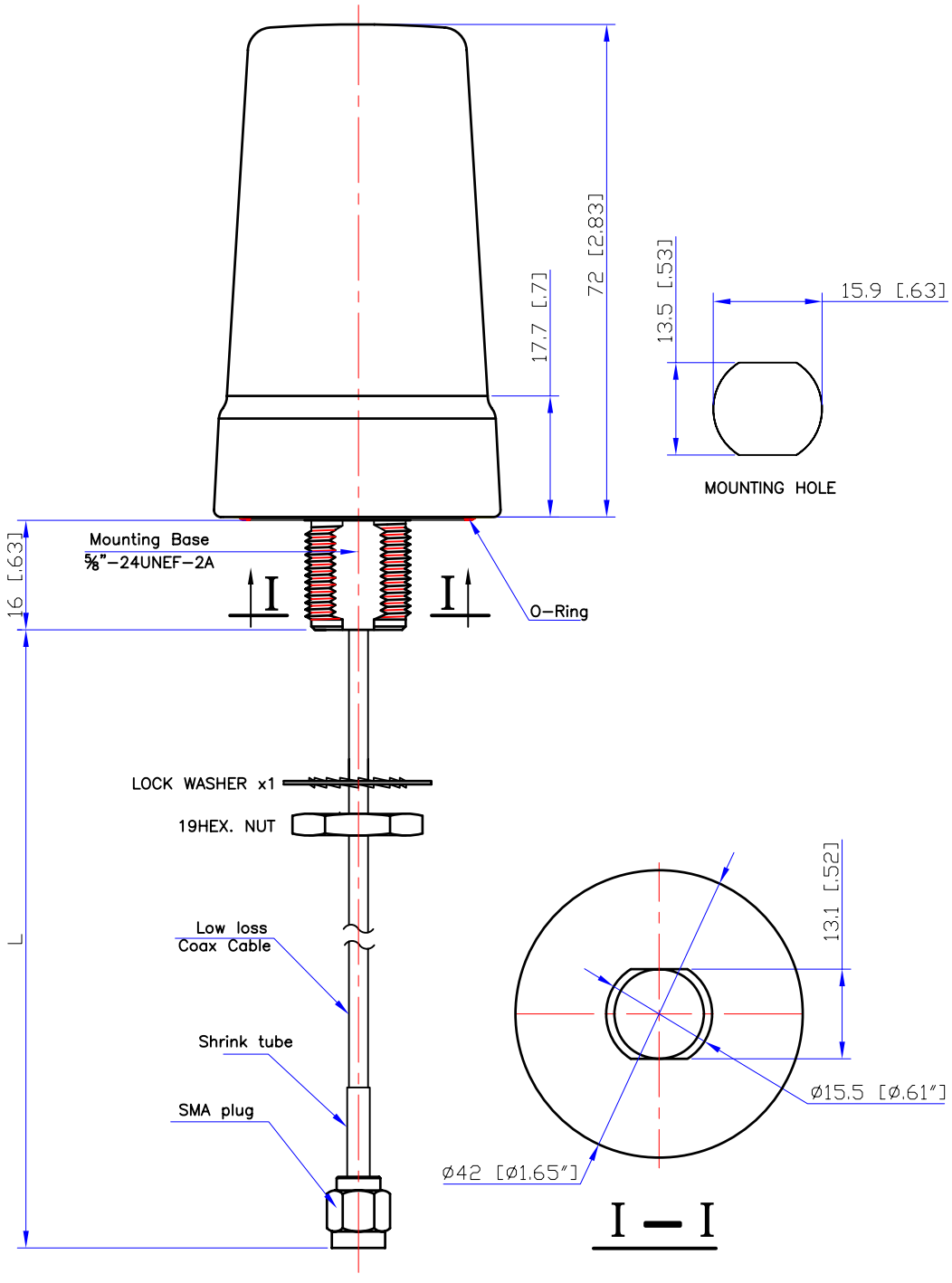

Series Part Numbers

Connector Code -XX-	Description	P / N
AM	SMA Plug	S765FL-L-AM-915
AH	SMA Plug Reverse Polarity	S765FL-L-AH-915
MM	MMCX Straigth Plug	S765FL-L-MM-915
RMM	MMCX Right Angle Plug	S765FL-L-RMM-915

Electrical Properties:

Frequency Range: 902~928 MHz
Impedance: 50Ω nominal
VSWR: <2.0:1
Gain: 2 dBi
Radiation: Omni
Polarization: Vertical

Mechanical Properties:

Cable: Low loss cable J100
Cable Length: L to be defined in inches
Connector: XX to be specified by customer
Material:
Body: ABS+PC (Black)
Base: Brass with Nickel plating
Operation Temp.: -20°C to +65°C
Storage Temp.: -30°C to +75°C

This is a RoHS compliant product.

TITLE	900 MHz External Antenna 765 Model	Rev. Date 01/03/11	SHEET 1 OF 1
UNIT mm(In.)	DWG. NO. S765FL-L-XX-915		
SCALE none	NEARSON		

All rights reserved NEARSON INC. Specification is subject to change without notice.

http://www.nearson.com

ПРОМЭЛЕКТРОНИКА/ sales@prom-elec.com