# EZ-LIGHT® Touch Gen 2 K30 Series Illuminated Multipurpose Buttons

## Features

*General Purpose Multicolor Indicator with Independent Momentary Touch Button Output*



- Excellent immunity to false triggering by water spray, detergents, oils, and other foreign materials
- Rugged, cost-effective, and easy-to-install multicolor indicator with touch button
- Waterproof construction for washdown environments
- Two or three independent colors in one unit: Color 3 overrides Colors 1 and 2, Color 2 overrides Color 1
- Available with PNP and NPN inputs/outputs, depending on the model
- Ergonomically designed to eliminate hand, wrist, and arm stresses associated with repeated switch operation; requires no physical force to operate
- Can be actuated with bare hands or gloves
- Five color options available
- 12 V DC to 30 V DC operation
- Terminal connection models available for panel wiring applications

## Models: 1 and 2 Colors

*Model Key*

| Family | Output State | Input/Output | Activation Method | Color 1: Power Applied | Color 2: Input Applied | Function | Connection[1] |
|---|---|---|---|---|---|---|---|
| K30 | A | P | T2 | G | R | F2 | Q |
| | A = Normally open<br>R = Normally closed | P = PNP<br>N = NPN | T2 = Touch | G = Green<br>R = Red<br>Y = Yellow<br>B = Blue<br>W = White<br>X = Not used | | F2 = Input activates Color 2. Touch changes output state. | Blank = 2 m (6.5 ft) integral PVC-jacketed cable<br>Q = Integral 4-pin M12 male quick-disconnect connector<br>QP = 150 mm (6 in) PVC-jacketed cable with a 4-pin M12 male quick-disconnect connector<br>T = Terminal screws |

*Sample Models*

| Model Name | Description |
|---|---|
| K30APT2XRF2Q | Normally open output state, with a momentary output function, and PNP input and output. Color 1: None. Color 2: Red input active, touch changes output state. Integral 4-pin M12 male quick-disconnect connector. |
| K30ANT2GRF2T | Normally open output state, with a momentary output function, and NPN input and output. Color 1: Green, power applied. Color 2: Red input active, touch changes output state. Terminal screws. |

## Models: 3 Color

*Model Key*

| Family | Output State | Input/Output | Activation Method | Color 1 | Color 2 | Color 3 | Function | Connection[1] |
|---|---|---|---|---|---|---|---|---|
| K30 | A | P | T2 | G | R | Y | F2 | Q |
| | A = Normally open<br>R = Normally closed | P = PNP | T2 = Touch | G = Green<br>R = Red<br>Y = Yellow<br>B = Blue<br>W = White<br>X = Not used | | | F2 = Inputs activate Colors 1, 2, and 3. Colors are independent of touch. | Blank = 2 m (6.5 ft) integral PVC-jacketed cable<br>Q = Integral 8-pin M12 male quick-disconnect connector<br>QP = 150 mm (6 in) PVC-jacketed cable with an 8-pin M12 male quick-disconnect connector |

*Sample Model*

| Model Name | Description |
|---|---|
| K30APT2GRYF2Q | Normally open output state, with a momentary output function, and PNP input and output. Color 1: Green. Color 2: Red. Color 3: Yellow. Color 3 overrides Colors 1 and 2, and Color 2 overrides Color 1. Touch changes output state. Integral 8-pin M12 male quick-disconnect connector. |

[1] Models with a quick-disconnect connector require a mating cordset.

Original Instructions
01-Oct-25

© Banner Engineering Corp. All rights reserved.
www.bannerengineering.com

189825
p/n: 189825 Rev. G

ПРОМЭЛЕКТРОНИКА/ sales@prom-elec.com

# Wiring

## 1 and 2 Color Models

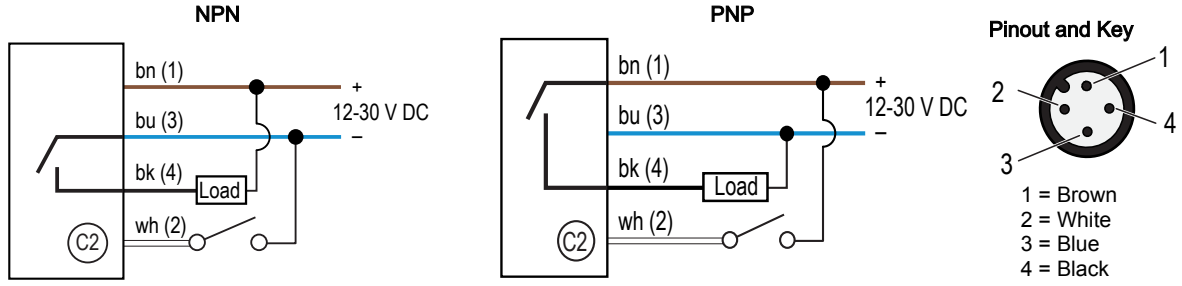


## 3 Color Model

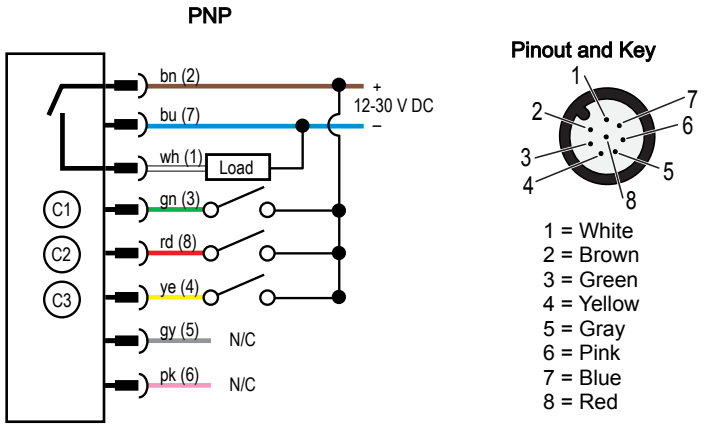


**NOTE:** Cabled wiring diagrams are shown. Quick disconnect wiring diagrams are functionally identical.

# Specifications

**Supply Voltage**

12 V DC to 30 V DC

**Supply Current**

55 mA max current (exclusive of load)

**Supply Protection Circuitry**

Protected against reverse polarity and transient voltages

**Touch Dwell Time**

If a touch dwells for longer than 60 seconds, the output will revert back to the untouched state.

**Output Rating**

Maximum Load: 150 mA

ON-state saturation voltage: < 2 V DC at 10 mA; <2.5 V DC at 150 mA

OFF-state leakage current: <10 µA at 30 V DC

**Storage Temperature**

–40 °C to +70 °C (–40 °F to +158 °F)

**Vibration and Mechanical Shock**

Vibration: 10 Hz to 55 Hz, 1.0 mm peak-to-peak amplitude per IEC 60068-2-6

Shock: 30G 11 ms duration, half sine wave per IEC 60068-2-27

**Output Response Time**

150 milliseconds On and Off

**Power-Up Delay**

300 milliseconds

**Connections**

Integral 4-pin or 8-pin M12 male quick-disconnect connector; 2 m (6.5 ft) PVC-jacketed integral cable; or 150 mm (6 in) PVC cable with a 4-pin or 8-pin M12 male quick-disconnect connector

**Environmental Rating**

Rated IP67, IP69K per ISO 20653

Cabled models also meet IP69K per ISO 20653 if the cable and cable entrance are protected from high-pressure spray. Indicator side of terminal models meet IP67, and IP69K per ISO 20653 when installed in an enclosure.

Screw connection points meet IEC IP00.

Meets UL type 4X and 13, when used in a suitable enclosure.

**Operating Conditions**

–40 °C to +50 °C (–40 °F to +122 °F)

90% at +50 °C maximum relative humidity (non-condensing)

**Construction**

Housing: polycarbonate

Translucent dome: polycarbonate

Mounting nut: PBT

**Mounting**

M22 × 1.5 Threaded base, max torque 2.25 N·m (20 in-lbf)


© Banner Engineering Corp. All rights reserved.
www.bannerengineering.com

### Indicator Characteristics

| Color | Dominant Wavelength (nm) or Color Temperature (CCT) | Lumen Output (Typical at 25 °C) |
|---|---|---|
| Green | 520 nm to 535 nm | 4.4 |
| Red | 620 nm to 630 nm | 1.7 |
| Yellow | 585 nm to 595 nm | 4.4 |
| Blue | 465 nm to 475 nm | 1 |
| White | 5665K to 9000K | 5 |

### Required Overcurrent Protection

**WARNING:** Electrical connections must be made by qualified personnel in accordance with local and national electrical codes and regulations.

Overcurrent protection is required to be provided by end product application per the supplied table.

Overcurrent protection may be provided with external fusing or via Current Limiting, Class 2 Power Supply.

Supply wiring leads < 24 AWG shall not be spliced.

For additional product support, go to www.bannerengineering.com.

| Supply Wiring (AWG) | Required Overcurrent Protection (A) | Supply Wiring (AWG) | Required Overcurrent Protection (A) |
|---|---|---|---|
| 20 | 5.0 | 26 | 1.0 |
| 22 | 3.0 | 28 | 0.8 |
| 24 | 2.0 | 30 | 0.5 |

### Certifications

Banner Engineering BV
Park Lane, Culliganlaan 2F bus 3
1831 Diegem, BELGIUM

## FCC Part 15 Class B for Unintentional Radiators

(Part 15.105(b)) This equipment has been tested and found to comply with the limits for a Class B digital device, pursuant to part 15 of the FCC Rules. These limits are designed to provide reasonable protection against harmful interference in a residential installation. This equipment generates, uses, and can radiate radio frequency energy and, if not installed and used in accordance with the instructions, may cause harmful interference to radio communications. However, there is no guarantee that interference will not occur in a particular installation. If this equipment does cause harmful interference to radio or television reception, which can be determined by turning the equipment off and on, the user is encouraged to try to correct the interference by one or more of the following measures:

- Reorient or relocate the receiving antenna.
- Increase the separation between the equipment and receiver.
- Connect the equipment into an outlet on a circuit different from that to which the receiver is connected.
- Consult the dealer or an experienced radio/TV technician for help.

(Part 15.21) Any changes or modifications not expressly approved by the party responsible for compliance could void the user's authority to operate this equipment.

## Industry Canada ICES-003(B)

This device complies with CAN ICES-3 (B)/NMB-3(B). Operation is subject to the following two conditions: 1) This device may not cause harmful interference; and 2) This device must accept any interference received, including interference that may cause undesired operation.

Cet appareil est conforme à la norme NMB-3(B). Le fonctionnement est soumis aux deux conditions suivantes : (1) ce dispositif ne peut pas occasionner d'interférences, et (2) il doit tolérer toute interférence, y compris celles susceptibles de provoquer un fonctionnement non souhaité du dispositif.

## Dimensions

All measurements are listed in millimeters [inches], unless noted otherwise. The measurements provided are subject to change.

### Quick-Disconnect Models

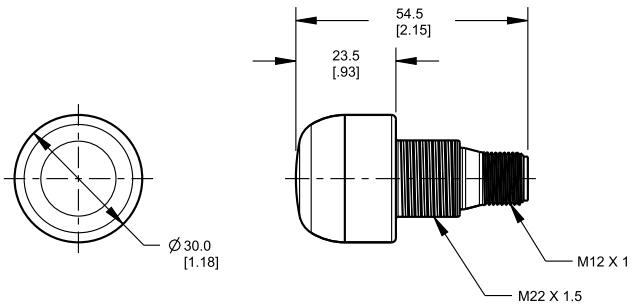


### Terminal Models

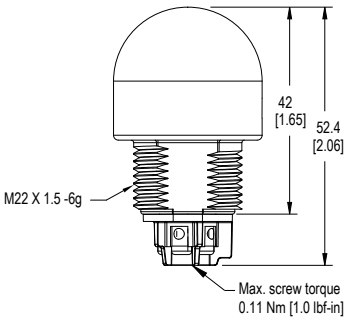



© Banner Engineering Corp. All rights reserved.
www.bannerengineering.com

# Accessories

## Cordsets

**4-Pin Single-Ended M12 Female Cordsets**

| Model | Length | Style | Dimensions | Pinout (Female) | |
|---|---|---|---|---|---|
| **MQDC-406** | 2 m (6.56 ft) | Straight | 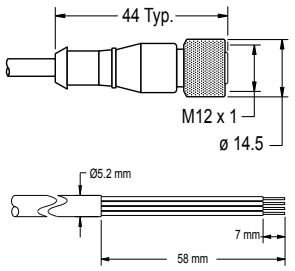 | 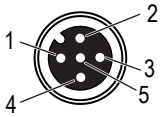 | 1 = Brown<br>2 = White<br>3 = Blue<br>4 = Black<br>5 = Not used<br>c UL us |
| **MQDC-415** | 5 m (16.4 ft) | | | | |
| **MQDC-430** | 9 m (29.5 ft) | | | | |
| **MQDC-450** | 15 m (49.2 ft) | | | | |
| **MQDC-406RA** | 2 m (6.56 ft) | Right-Angle | 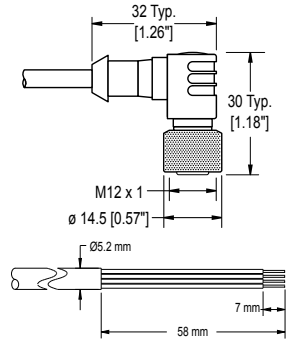 | 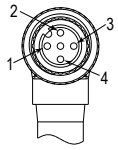 | |
| **MQDC-415RA** | 5 m (16.4 ft) | | | | |
| **MQDC-430RA** | 9 m (29.5 ft) | | | | |
| **MQDC-450RA** | 15 m (49.2 ft) | | | | |

**8-Pin Single-Ended M12 Female Open-Shielded Cordsets**

| Model | Length | Style | Dimensions | Pinout (Female) |
|---|---|---|---|---|
| **MQDC2S-806** | 2.04 m (6.7 ft) | Straight | 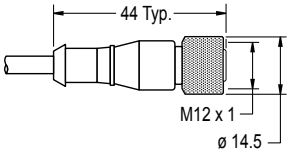 | 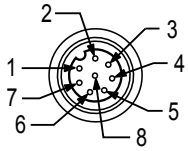<br>1 = White<br>2 = Brown<br>3 = Green<br>4 = Yellow<br>5 = Gray<br>6 = Pink<br>7 = Blue<br>8 = Red |
| **MQDC2S-815** | 5.04 m (16.54 ft) | | | |
| **MQDC2S-830** | 10.04 m (32.95 ft) | | | |
| **MQDC2S-850** | 16 m (52.49 ft) | | | |
| **MQDC2S-806RA** | 2 m (6.56 ft) | Right-Angle | 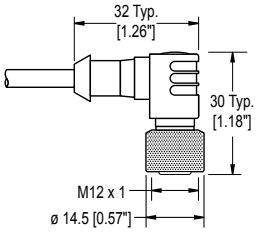 | |
| **MQDC2S-815RA** | 5 m (16.4 ft) | | | |
| **MQDC2S-830RA** | 10 m (32.81 ft) | | | |
| **MQDC2S-850RA** | 16 m (52.49 ft) | | | |

## Brackets

All measurements are listed in millimeters, unless noted otherwise. The measurements provided are subject to change.

**SMB22A**

- Right-angle bracket with curved slot for versatile orientation
- 12-ga. stainless steel
- Mounting hole for 22 mm sensor

**Hole center spacing:** A to B = 26.0
**Hole size:** A = ø 4.6, B = 4.6 x 16.9, C = 22.2

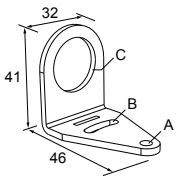



© Banner Engineering Corp. All rights reserved.
www.bannerengineering.com

**SMB22FVK**

- V-clamp, flat bracket and fasteners for mounting to pipe or extensions
- Clamp accommodates 28 mm diameter tubing or 1 in. square extrusions
- 22 mm hole for mounting sensor

**Hole size:** A = ø 22.5

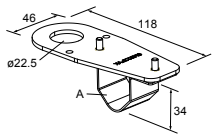


**SMB22RAVK**

- V-clamp, right-angle bracket and fasteners for mounting to pipe or extensions
- Clamp accommodates 28 mm diameter tubing or 1 in. square extrusions
- 22 mm hole for mounting sensor

**Hole size:** A = ø 22.5

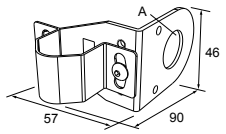


**SMBAMS22P**

- Flat SMBAMS series bracket with 22 mm hole for mounting sensors
- Articulation slots for 90+° rotation
- 12-ga. (2.6 mm) cold-rolled steel

**Hole center spacing:** A = 26.0, A to B = 13.0
**Hole size:** A = 26.8 x 7.0, B = ø 6.5, C = ø 22.5

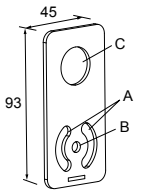


**SMBAMS22RA**

- Right-angle SMBAMS series bracket with 22 mm hole for mounting sensors
- Articulation slots for 90+° rotation
- 12-ga. (2.6 mm) cold-rolled steel

**Hole center spacing:** A = 26.0, A to B = 13.0
**Hole size:** A = 26.8 x 7.0, B = ø 6.5, C = ø 22.5

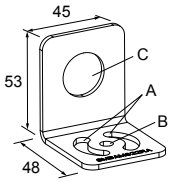


**TC-K30-CL**

- Touch cover

**Diameter:** A = 40.7 mm
**Height:** B = 31 mm

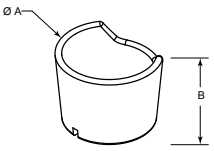


# Banner Engineering Corp Limited Warranty

Banner Engineering Corp. warrants its products to be free from defects in material and workmanship for one year following the date of shipment. Banner Engineering Corp. will repair or replace, free of charge, any product of its manufacture which, at the time it is returned to the factory, is found to have been defective during the warranty period. This warranty does not cover damage or liability for misuse, abuse, or the improper application or installation of the Banner product.

**THIS LIMITED WARRANTY IS EXCLUSIVE AND IN LIEU OF ALL OTHER WARRANTIES WHETHER EXPRESS OR IMPLIED (INCLUDING, WITHOUT LIMITATION, ANY WARRANTY OF MERCHANTABILITY OR FITNESS FOR A PARTICULAR PURPOSE), AND WHETHER ARISING UNDER COURSE OF PERFORMANCE, COURSE OF DEALING OR TRADE USAGE.**

This Warranty is exclusive and limited to repair or, at the discretion of Banner Engineering Corp., replacement. **IN NO EVENT SHALL BANNER ENGINEERING CORP. BE LIABLE TO BUYER OR ANY OTHER PERSON OR ENTITY FOR ANY EXTRA COSTS, EXPENSES, LOSSES, LOSS OF PROFITS, OR ANY INCIDENTAL, CONSEQUENTIAL OR SPECIAL DAMAGES RESULTING FROM ANY PRODUCT DEFECT OR FROM THE USE OR INABILITY TO USE THE PRODUCT, WHETHER ARISING IN CONTRACT OR WARRANTY, STATUTE, TORT, STRICT LIABILITY, NEGLIGENCE, OR OTHERWISE.**

Banner Engineering Corp. reserves the right to change, modify or improve the design of the product without assuming any obligations or liabilities relating to any product previously manufactured by Banner Engineering Corp. Any misuse, abuse, or improper application or installation of this product or use of the product for personal protection applications when the product is identified as not intended for such purposes will void the product warranty. Any modifications to this product without prior express approval by Banner Engineering Corp will void the product warranties. All specifications published in this document are subject to change; Banner reserves the right to modify product specifications or update documentation at any time. Specifications and product information in English supersede that which is provided in any other language. For the most recent version of any documentation, refer to: www.bannerengineering.com.

For patent information, see www.bannerengineering.com/patents.


© Banner Engineering Corp. All rights reserved.
www.bannerengineering.com