K30LI and K50LI Intrinsically Safe Indicators

Features

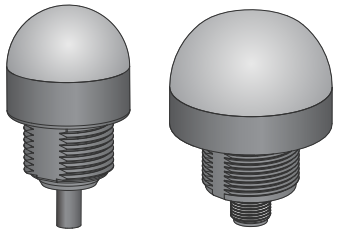

- For use in hazardous areas with suitable zener barriers or galvanic isolators
- ATEX, CSA c/us, and IECEx
- Fully sealed and rated to IP67/IP69K per DIN 40050-9
- 1-, 2-, or 3-color models available with 5 available colors

Models

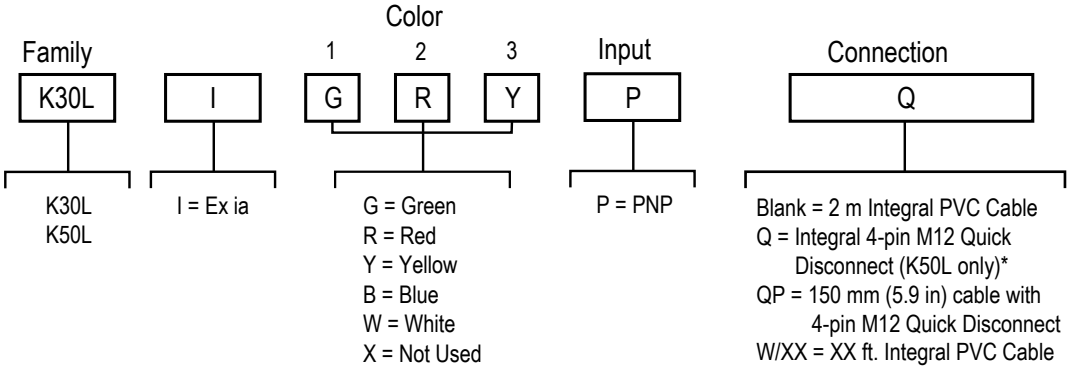

*Models with a quick disconnect require a mating cordset

K30L Models

Model	LED Function
K30LIGXXPQP	1 Color: Green
K30LIYXXPQP	1 Color: Yellow
K30LIRXXPQP	1 Color: Red
K30LIBXXPQP	1 Color: Blue
K30LIWXXPQP	1 Color: White
K30LIGRXPQP	2 Color: Green, Red
K30LIGYXPQP	2 Color: Green, Yellow
K30LIRYXPQP	2 Color: Red, Yellow
K30LIGRYPQP	3 Color: Green, Red, Yellow

K50L Models

Model[1]	LED Function
K50LIGXXPQ	1 Color: Green
K50LIYXXPQ	1 Color: Yellow
K50LIRXXPQ	1 Color: Red
K50LIBXXPQ	1 Color: Blue
K50LIWXXPQ	1 Color: White
K50LIGRXPQ	2 Color: Green, Red
K50LIGYXPQ	2 Color: Green, Yellow
K50LIRYXPQ	2 Color: Red, Yellow
K50LIGRYPQ	3 Color: Green, Red, Yellow

[1] To order the 150 mm (6 in) PVC cable model with a 4-pin M12 quick disconnect, replace the suffix "Q" with "QP" in the model number. For example, K50LIGXXPQP. Models with a quick disconnect require a mating cordset.

Original Instructions
08-Jun-26

© Banner Engineering Corp. All rights reserved.
www.bannerengineering.com

172445
p/n: 172445 Rev. H

ПРОМЭЛЕКТРОНИКА/ sales@prom-elec.com

Installation Instructions

Ex/HazLoc Applications

WARNING:
- **Explosive Atmospheres/Hazardous Locations**
- It is the user's responsibility to ensure that all local, state, and national laws, rules, codes, or regulations relating to the installation and use of this device in any particular application are satisfied. This device must be installed by a Qualified Person[2], in accordance with this document and applicable regulations.

WARNING:
- **Explosion Hazard**
- Do not disconnect equipment unless the power has been switched off or the area is known to be non-hazardous.

WARNING:
- **Electrostatic Discharge (ESD) Specific Conditions for Safe Use**
- Parts of the enclosure are non-conducting and can generate an ignition-capable level of ESD.
- To reduce the risk of ignition due to electrostatic discharge, avoid contact with the equipment while an explosive atmosphere is present.
- Clean the equipment with only a damp cloth.

Specific Conditions for Use and General Notes

- See Specifications and Wiring Diagrams for important information concerning entity parameters, permissible locations, electrical connections and certifications.
- In addition to the warning above concerning user responsibility, the installation must comply with the following:
  - All installations must comply with all manufacturer's instructions.
  - U.S. Installations: The relevant requirements of the National Electrical Code® (ANSI/NFPA-70 (NEC®) and when appropriate ANSI/ISA-RP12.06.01 Installation of Intrinsically Safe Systems for Hazardous (Classified) Locations.
  - Canadian Installations: The relevant requirements of the Canadian Electrical Code (CSA C22.1).
  - ATEX and IECEx Installations: The relevant requirements of EN IEC 60079-14 and applicable National regulations.
  - For quick disconnect (QD) models only: Use Banner **MQDC-4##** cordsets (see "Cordsets" on page 6), or suitable M12 quick disconnect cordsets with threaded retaining nut (see Specifications). The cordset must be securely fastened using the M12×1 quick disconnect retaining nut to prevent disconnection. Maximum connector torque: 6 ft·lbs.
- Do not attempt any repairs to this device; it contains no field-replaceable parts or components. Tampering and/or replacement with non-factory components may adversely affect the safe use of the system.
- Approved Apparatus entity parameters must meet the following requirements:
  - V_{oc} or $V_t \leq V_{max}$
  - $C_a \geq C_i + C_{cable}$
  - I_{sc} or $I_t \leq I_{max}$
  - $La \geq L_i + L_{cable}$
- Device and Cable Entity Parameters: See Wiring and "Configuration" on page 3
- The ambient operating temperature range of the device:
  - EPL Ga & Ma:
    - Pi = 2.8W: Ta = –40 °C to +50 °C (–40 °F to +122 °F)
    - Pi = 3.4W: Ta = –40 °C to +40 °C (–40 °F to +104 °F)
  - EPL Da:
    - Pi = 2.2W: Ta = –40 °C to +50 °C (–40 °F to +122 °F)
    - Pi = 2.7W: Ta = –40 °C to +40 °C (–40 °F to +104 °F)
- For intrinsically safe installations, device must be used with certified intrinsically safe switching amplifiers and barriers (Approved Apparatus) with intrinsically safe circuits that limit supply voltage and current in the event of failures.
- Intrinsic safety ground, if required for the Associated Apparatus, shall be less than 1 ohm.
- The ingress protection (for example, IP rating) of enclosures/panels may be invalidated by the installation of the EZ-LIGHT(s). The installation of the EZ-LIGHT(s) in a particular enclosure/panel is subject to the evaluation/acceptance of the applicable approval agency.
- The nonconducting materials of this device may be susceptible to ignition-capable level of electrostatic charging and precautions must be taken to avoid this. The user/installer shall ensure that the equipment is not installed in a location where it may be subjected to external conditions (such as high-pressure steam) which are conducive to creating a build-up of electrostatic charges.
- Clean with a damp cloth only.
- If the equipment is likely to come into contact with aggressive substances[3], then it is the responsibility of the user to take suitable precautions[4] that prevent it from being adversely affected, thus ensuring that the type of protection is not compromised.

---

[2] A Qualified Person is a person who, by possession of a recognized degree or certificate of professional training, or who, by extensive knowledge, training and experience, has successfully demonstrated the ability to solve problems relating to the subject matter and work.
[3] Aggressive substances—for example, acidic liquids or gases that may attack metals, or solvents that may affect polymeric materials.
[4] Suitable precaution—for example, regular checks as part of routine inspections or establishing from the materials data sheet that it is resistant to specific chemicals.

© Banner Engineering Corp. All rights reserved.
www.bannerengineering.com

- For indicators with multiple colors, only one color is intended to be on at a time.
- When more than one intrinsically safe supply (e.g. two or three barriers) is connected to an LED indicator (input) the combined electrical parameters of the supply must remain intrinsically safe.

Wiring

The device is intrinsically safe ONLY when used with certified intrinsically safe switching amplifiers and barriers (Approved Apparatus) with intrinsically safe circuits.

Banner does not manufacture such devices; however, Banner applications engineers can refer you to suppliers of certified devices that will interface with the Banner device.

The user is responsible for proper installation and maintenance of this equipment, and must conform with the certification requirements relating to barriers and to maximum allowable capacitance and inductance of the field wiring. If in doubt about these requirements, Banner applications engineers can refer you to the appropriate authority.

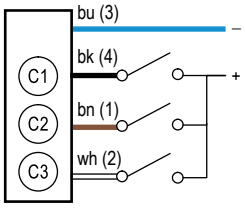

Wiring Key
1 = Brown
2 = White
3 = Blue
4 = Black
Color Key
C1 = Color 1
C2 = Color 2
C3 = Color 3

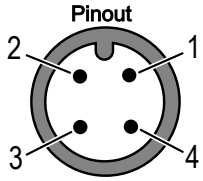

See "Configuration" on page 3 for hazardous area wiring and installation notes.

Configuration

Control Drawing 1-Color Configuration

One Color Configuration

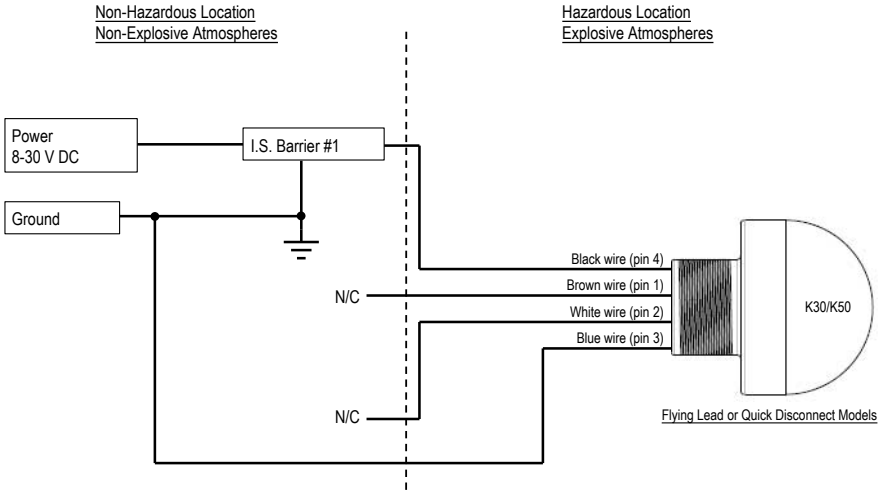

I.S. Barrier Installation Notes

1. Safety parameters are as follows:
Ui/Vmax = 30 V DC
Ii/Imax = 1 A
EPL Ga & Ma:
Pi = 3.4 W (Ta = -40 °C to +40 °C)
Pi = 2.8 W (Ta = -40 °C to +50 °C)
Ci = 0
Li = 0
EPL Da:
Pi = 2.7 W (Ta = -40 °C to +40 °C)
Pi = 2.2 W (Ta = -40 °C to +50 °C)
Ci = 0
Li = 0

2. Choose approved barriers such that the following conditions are met with all barriers combined
Ui / Vmax ≥ Uo / Voc
Ii / Imax ≥ Io / Isc
Pi / Pmax ≥ Po
Co / Ca ≥ Ci + Ccable
Lo /La ≥ Li + Lcable

3. Install I.S. barriers in accordance with manufacturers instructions and local codes

4. Suggested I.S. barriers are as follows
MTL 7715+ (15 V / 100 Ω)
MTL 7715P+ (15 V / 50 Ω)
Turck MZB15PX (15 V / 50 Ω)

	IIC	IIB	IIA
Ccable	66 nF	0.56 µF	1.82 µF
Lcable	35 µH	140 µH	280 µF

© Banner Engineering Corp. All rights reserved.
www.bannerengineering.com

Control Drawing 2-Color Configuration

Two Color Configuration

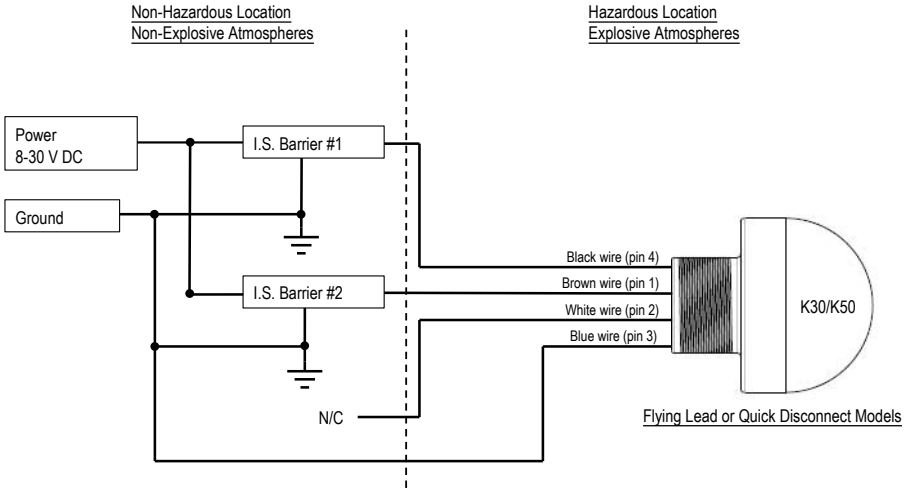

I.S. Barrier Installation Notes

1. Safety Parameters are as follows:
Ui / Vmax = 30 V DC
Ii / Imax = 1 A
EPL Ga & Ma:
Pi = 3.4 W (Ta = -40 °C to +40 °C)
Pi = 2.8 W (Ta = -40 °C to +50 °C)
Ci = 0
Li = 0
EPL Da:
Pi = 2.7W (Ta = -40 °C to +40 °C)
Pi = 2.2W (Ta = -40 °C to +50 °C)
Ci = 0
Li = 0

2. Choose approved barriers such that the following conditions are met with all barriers combined
Ui / Vmax ≥ Uo / Voc
Ii / Imax ≥ Io / Isc
Pi / Pmax ≥ Po
Co / Ca ≥ Ci + Ccable
Lo /La ≥ Li + Lcable

3. Install I.S. barriers in accordance with manufacturers instructions and local codes

4. Suggested I.S. barriers are as follows
MTL 7715+ (15 V / 100 Ω)
MTL 7715P+ (15 V / 50 Ω)
Turck MZB15PX (15 V / 50 Ω)

	IIC	IIB	IIA
Ccable	66 nF	0.56 µF	1.82 µF
Lcable	35 µH	140 µH	280 µH

Control Drawing 3-Color Configuration

Three Color Configuration

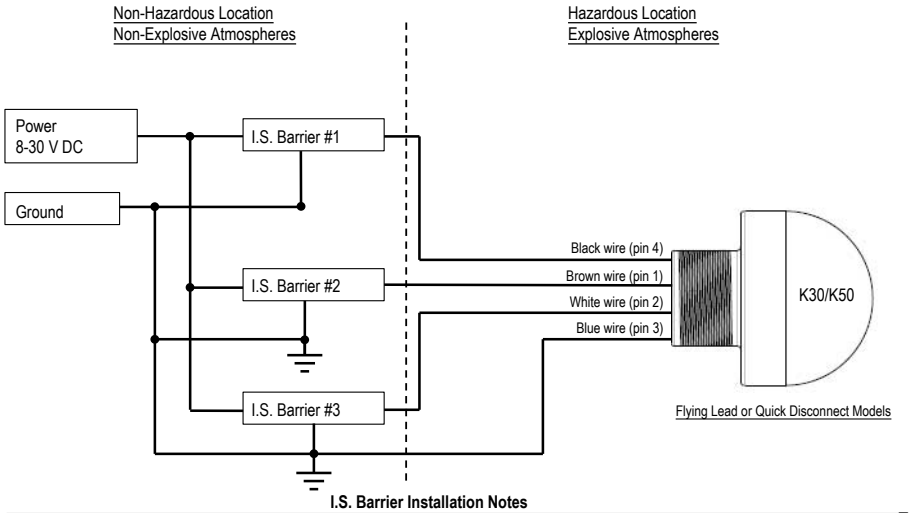

I.S. Barrier Installation Notes

1. Safety Parameters are as follows:
Ui / Vmax = 30 V DC
Ii / Imax = 1 A
EPL Ga & Ma:
Pi = 3.4 W (Ta = -40 °C to +40 °C)
Pi = 2.8 W (Ta = -40 °C to +50 °C)
Ci = 0
Li = 0
EPL Da:
Pi = 2.7 W (Ta = -40 °C to +40 °C)
Pi = 2.2 W (Ta = -40 °C to +50 °C)
Ci = 0
Li = 0

2. Choose approved barriers such that the following conditions are met with all barriers combined
Ui / Vmax ≥ Uo / Voc
Ii / Imax ≥ Io / Isc
Pi / Pmax ≥ Po
Co / Ca ≥ Ci + Ccable
Lo /La ≥ Li + Lcable

3. Install I.S. barriers in accordance with manufacturers instructions and local codes

4. Suggested I.S. barriers are as follows
MTL 7715+ (15 V / 100 Ω)
MTL 7715P+ (15 V / 50 Ω)
Turck MZB15PX (15 V / 50 Ω)

	IIC	IIB	IIA
Ccable	66 nF	0.56 µF	1.82 µF
Lcable	35 µH	140 µH	280 µH

Specifications

Supply Voltage and Current

See Configuration for safety parameters

Indicators

© Banner Engineering Corp. All rights reserved.
www.bannerengineering.com

Entire translucent diffuser or dome provides indication. LEDs are independently selected: Green, Red, or Amber; 2 or 3 colors, depending on model. For other colors/combinations, contact Banner Engineering for availability.

Environmental Rating

IP67/IP69K per DIN 40050-9

Approvals

CSA-c/us

Gas and Vapors: Class I Zone 0 AEx/Ex ia IIC T4 Ga / Class I Div 1 Groups ABCD

Dust: Zone 20 AEx/Ex ia IIIC T130°C Da / Class II Div 1 Groups EFG / Class III Div 1

CSA14CA2679646X

ATEX/IECEx

Gas and Vapors: II 1 G Ex ia IIC T4 Ga (Group IIC Zone 0)

Dust: II 1 D Ex ia IIIC T_{200} 130°C Da (Group IIIC Zone 20)

Mines: I M1 Ex ia I Ma (Methane)

Sira 13ATEX2058X

IECEx SIR 13.0020X

ATEX: EN IEC 60079-0:2018 & EN 60079-11:2012

IECEx: IEC 60079-0:2017 Ed.7 & IEC 60079-11:2011 Ed.6

Construction

Base: polycarbonate

Translucent dome: polycarbonate

Connections

Maximum cable length 29 m per parameters list in "Configuration" on page 3.

Connecting 4-pin M12 QD Cordsets (see "Cordsets" on page 6): Female single-ended Multiconductor cable (at minimum): UL Style 2517, 24 AWG wire, rated ≥ 80 °C; M12 quick disconnect connector: per IEC 61076-2-101, must have threaded M12 × 1 retaining nut.

K30: 2 m (6.5 ft) PVC integral cable, or 150 mm (5.9 in) PVC cable with 4-pin M12 quick disconnect connector

K50: 4-pin M12 integral quick disconnect connector, 2 m (6.5 ft) PVC integral cable, or 150 mm (5.9 in) PVC cable with 4-pin M12 quick disconnect connector

Operating Conditions

EPL Ga & Ma:

- Pi = 2.8W: Ta = –40 °C to +50 °C (–40 °F to +122 °F)
- Pi = 3.4W: Ta = –40 °C to +40 °C (–40 °F to +104 °F)

EPL Da:

- Pi = 2.2W: Ta = –40 °C to +50 °C (–40 °F to +122 °F)
- Pi = 2.7W: Ta = –40 °C to +40 °C (–40 °F to +104 °F)

See "Configuration" on page 3

Certifications

2809

Banner Engineering BV
Park Lane | Culliganlaan 2F bus 3 | 1831 Diegem, BELGIUM

IEC IECEx SIR 13.0020X
ATEX Sira 13ATEX2058X
CSA CoC 2679646

K30L Product Label



K50L Product Label



Dimensions

All measurements are listed in millimeters [inches], unless noted otherwise. The measurements provided are subject to change.

K30L Cabled Models

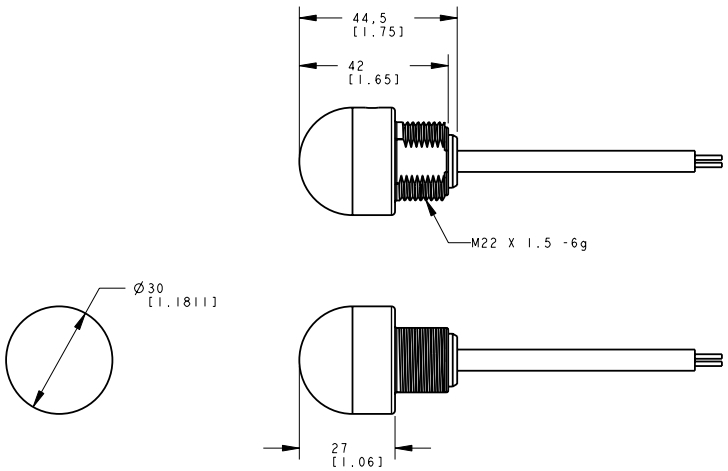

© Banner Engineering Corp. All rights reserved.
www.bannerengineering.com

K50L Quick Disconnect Models

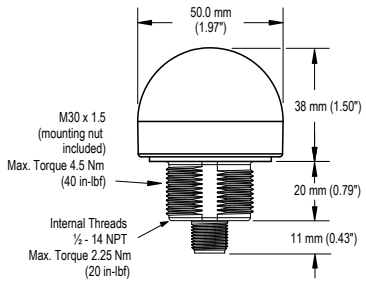

K50L Cabled Models

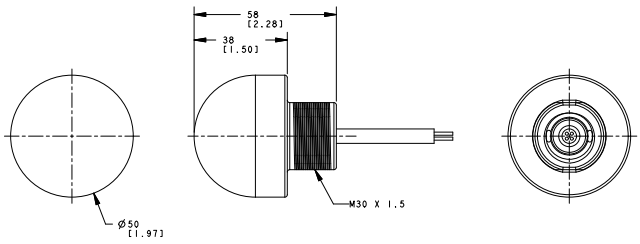

Accessories

Cordsets

4-Pin Single-Ended M12 Female Cordsets					
Model	**Length**	**Style**	**Dimensions**	**Pinout (Female)**	
MQDC-406	2 m (6.56 ft)	Straight	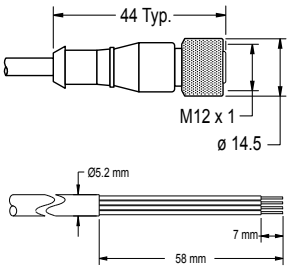	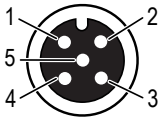	1 = Brown 2 = White 3 = Blue 4 = Black 5 = Not used c UL us
MQDC-415	5 m (16.4 ft)				
MQDC-430	9 m (29.5 ft)				
MQDC-450	15 m (49.2 ft)				
MQDC-406RA	2 m (6.56 ft)	Right-Angle	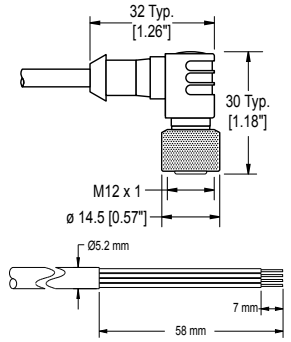	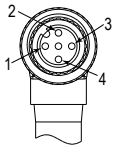	
MQDC-415RA	5 m (16.4 ft)				
MQDC-430RA	9 m (29.5 ft)				
MQDC-450RA	15 m (49.2 ft)				

Repairs and Translations (No Field-Replaceable Parts)

English

Contact Banner Engineering for troubleshooting of this device. **Do not attempt any repairs to this Banner device; it contains no field-replaceable parts or components.** If the device, device part, or device component is determined to be defective by a Banner Applications Engineer, they will advise you of Banner's RMA (Return Merchandise Authorization) procedure.

```
IMPORTANT: If instructed to return the device, pack it with care. Damage that occurs in return shipping is
not covered by warranty.
```

Obtain assistance with product repairs by contacting your local Banner Engineering Corp distributor or by calling Banner directly at (763) 544-3164. Access literature translated into your native language on the Banner website at www.bannerengineering.com or contact Banner directly at (763) 544-3164.

© Banner Engineering Corp. All rights reserved.
www.bannerengineering.com

Deutsch

Wenden Sie sich zur Fehlerbehebung dieses Geräts an Banner Engineering. **Versuchen Sie nicht, Reparaturen an diesem Banner-Gerät vorzunehmen. Das Gerät enthält keine am Einsatzort auszuwechselnden Teile oder Komponenten.** Wenn ein Banner-Anwendungstechniker zu dem Schluss kommt, dass dieses Gerät, ein Teil oder eine Komponente davon defekt ist, erhalten Sie von dem Techniker Erläuterungen zu Banners RMA-Verfahren (Return Merchandise Authorization) für die Warenrückgabe.

WICHTIG: Wenn Sie der Techniker anweist, das Gerät zurückzusenden, verpacken Sie es bitte sorgfältig. Transportschäden bei der Rücksendung werden von der Garantie nicht abgedeckt.

Unterstützung bei Produktreparaturen erhalten Sie von Ihrem örtlichen Banner Engineering Corp Händler oder direkt von Banner unter Tel. (763) 544-3164. Die in Ihre Muttersprache übersetzte Literatur finden Sie auf der Banner-Website unter www.bannerengineering.com oder kontaktieren Sie Banner direkt unter Tel. (763) 544-3164.

Français

Pour plus d'informations sur le dépannage du produit, contactez Banner Engineering. **Ne tentez pas de réparer ce dispositif Banner. Il ne contient aucun composant ou pièce qui puisse être remplacé sur place.** Si un ingénieur de Banner conclut que le dispositif ou l'une de ses pièces ou composants est défectueux, il vous informera de la procédure à suivre pour le retour des produits (RMA).

Important : Si vous devez retourner le dispositif, emballez-le avec soin. Les dégâts occasionnés pendant le transport de retour ne sont pas couverts par la garantie.

Pour vous aider lors de la réparation de produits, contactez votre distributeur Banner local our appelez directement Banner au (763) 544-3164. La documentation traduite dans votre langue est disponible sur le site internet de Banner www.bannerengineering.com ou contactez directement Banner au (763) 544-3164.

Italiano

Per le procedure di individuazione e riparazione dei guasti di questo dispositivo, contattare Banner Engineering. **Non tentare di riparare questo dispositivo Banner, in quanto non contiene parti o componenti sostituibili dall'utente.** Se il dispositivo, una parte del dispositivo o un componente del dispositivo viene riscontrato difettoso da un tecnico Banner, il nostro personale vi comunicherà la procedura da seguire per ottenere l'autorizzazione al reso.

Importante: Se si ricevono istruzioni di rispedire il dispositivo al produttore, imballarlo con cura. I danni dovuti al trasporto non sono coperti dalla garanzia.

Per assistenza nelle riparazioni dei prodotti, contattare il distributore locale Banner Engineering Corp o contattare direttamente Banner al numero (763) 544-3164. È possibile accedere alla documentazione tradotta nella propria lingua madre sul sito Web Banner all'indirizzo www.bannerengineering.com o contattare direttamente Banner al numero (763) 544-3164.

Español

Comuníquese con Banner Engineering para solucionar de problemas de este dispositivo. **No intente ninguna reparación a este dispositivo de Banner, contiene piezas o componente que no se pueden cambiar en terreno.** Si algún ingeniero de aplicaciones de Banner determina que el dispositivo, alguna de las piezas o alguno de los componentes del dispositivo está defectuoso, le informará el procedimiento de autorización de devolución de mercancía (RMA, por sus siglas en inglés) de Banner.

Importante: Si se le solicita devolver el dispositivo, empáquelo con cuidado. Puede haber daños durante el envío de devolución que no estén cubiertos por la garantía.

Para reparaciones de productos, por favor contacte a su distribuidor local de Banner Engineering o llame a Banner directamente al 00 1 (763) 544-3164. Vea la literatura traducida en su idioma en el sitio web Banner en www.bannerengineering.com o comuníquese con Banner directamente al 00 1 (763) 544-3164.

中国人

如需对本装置进行故障排查，请联系邦纳。**请勿尝试自行维修该邦纳装置；本装置不包含任何可在现场更换的部件或组件。** 若经邦纳应用工程师确认设备、设备部件或组件存在缺陷，他们将告知您邦纳退货授权 (RMA) 流程。

重要注意事项： 如被要求退回装置，请妥善包装后寄回。退货运输过程中发生的损坏不在保修范围内。

请联系当地的 Banner Engineering Corp 经销商或直接致电 Banner +1 (763) 544-3164，以获得产品维修帮助。请访问邦纳网站 www.bannerengineering.com 或直接拨打 +1 (763) 544-3164 联系邦纳，获取翻译成您母语的资料。

한국인

이 장치의 문제를 해결하려면 Banner Engineering에 문의하십시오. **이 Banner 장치에는 현장에서 교체할 수 있는 부품 또는 구성품이 없으므로 수리를 시도하지 마십시오.** Banner 애플리케이션 엔지니어가 장치, 장치 부품 또는 장치 구성품에 결함이 있는 것으로 판정하면, Banner의 RMA(제품 반송 승인)절차에 대해 안내해 드립니다.

중요: 제품을 반송하도록 안내 받으셨다면 잘 포장해주십시오. 반송 도중에 발생한 손상은 보증 서비스가 적용되지 않습니다.

제품 수리에 대한 지원은 지역 Banner Engineering Corp 대리점에 문의하거나 Banner에 직접 (763) 544-3164로 문의하실 수 있습니다. 사용자의 모국어로 번역된 자료는 Banner 웹사이트 www.bannerengineering.com에서 액세스하거나 Banner에 직접 (763) 544-3164로 문의하실 수 있습니다.

© Banner Engineering Corp. All rights reserved.
www.bannerengineering.com

日本語

この装置のトラブルシューティングについては、バナーエンジニアリングにお問い合わせください。**このバナー装置には、現場では交換できない部品またはコンポーネントが含まれているため、修理を試みてはいけません。** バナーのアプリケーションエンジニアが装置、装置の部品、または装置のコンポーネントに欠陥があると判断した場合、バナーのRMA（返品承認）手続きについてお知らせします。

> **重要 ：** 返品を指示された場合は、装置を丁寧に梱包してください。返品時に発生した破損は保証の対象外となります。

製品の修理については、最寄りのBanner Engineering Corp代理店にお問い合わせいただくか、米国+1 (763) 544-3164まで直接お電話でお問い合わせください。バナーのウェブサイト（www.bannerengineering.com）でお客様の言語に翻訳された資料にアクセスするか、米国+1 (763) 544-3164まで直接お電話でお問い合わせください。

čeština

Pro řešení problémů se zařízením kontaktujte společnost Banner Engineering. **Neprovádějte žádné opravy zařízení Banner. Neobsahují žádné komponenty nebo části, které by byly vyměnitelné.** Pokud je zařízení, jeho část nebo díl označen technikem společnosti Banner jako poškozený, bude Vám doporučeno vyplnit reklamační RMA protokol.

> **Důležité:** Pokud byl vydán požadavek na vrácení zařízení, pečlivě ho zabalte. Poškození vzniklé při dopravě není považováno za záruční opravu.

Pokud produkt potřebuje opravu, vyžádejte si pomoc od místního distributora společnosti Banner Engineering Corp nebo přímo na telefonním čísle (763) 544-3164. Dokumentaci přeloženou do vašeho jazyka si vyhledejte na webových stránkách společnosti Banner na adrese www.bannerengineering.com nebo se obraťte přímo na společnost Banner na telefonním čísle (763) 544-3164.

Polski

W celu rozwiązania problemów z urządzeniem należy skontaktować się z działem technicznym firmy Banner Engineering. **Pod żadnym pozorem nie próbuj naprawiać tego urządzenia firmy Banner; nie zawiera ono części ani elementów, które można wymieniać samodzielnie.** Jeśli urządzenie, jego część lub element zostaną uznane za wadliwe przez inżyniera technicznego Banner, poinformuje on użytkownika o firmowej procedurze zwrotu towaru (RMA) firmy Banner.

> **Ważne:** Jeśli urządzenie ma zostać zwrócone, należy je starannie zapakować. Uszkodzenia powstałe podczas odsyłki nie są objęte gwarancją.

Aby uzyskać pomoc w zakresie naprawy produktu, należy skontaktować się z lokalnym dystrybutorem Banner Engineering Corp lub zadzwonić bezpośrednio do firmy Banner pod numer (763) 544-3164. Dostęp do literatury przetłumaczonej na swój język ojczysty można uzyskać na stronie internetowej firmy Banner pod adresem www.bannerengineering.com lub kontaktując się bezpośrednio z firmą Banner pod numerem (763) 544-3164.

Português

Entre em contato com a Engenharia da Banner para a solução de problemas deste dispositivo. **Não tente fazer nenhum reparo neste dispositivo Banner; ele não contém peças ou componentes substituíveis em campo.** Se um técnico de aplicações da Banner determinar que o dispositivo, peça ou componente do dispositivo está com defeito, ele o informará sobre o procedimento de RMA (Autorização de Devolução de Mercadoria) da Banner.

> **Importante:** Se for instruído a devolver o dispositivo, embale-o com cuidado. Os danos ocorridos no transporte de devolução não são cobertos pela garantia.

Obtenha assistência para reparos do produto entrando em contato com o distribuidor local da Banner Engineering Corp ou ligando diretamente para a Banner no telefone (763) 544-3164. Acesse a literatura traduzida para seu idioma nativo no site da Banner em www.bannerengineering.com ou entre em contato diretamente com a Banner pelo telefone (763) 544-3164.

Türkçe

Bu cihazda sorun giderme işlemleri için Banner Engineering ile iletişime geçin. **Bu Banner cihazını onarmaya çalışmayın; cihaz sahada değiştirilebilir parça veya bileşen içermez.** Bir Banner Uygulama Mühendisi tarafından cihazın, cihazın bir parçasının veya bir cihaz bileşeninin kusurlu olduğu tespit edilirse, Banner RMA (İade Mal Yetkilendirme) prosedürü hakkında bilgilendirilirsiniz.

> **ÖNEMLİ:** İade etmeniz istenirse, cihazı dikkatli bir şekilde paketleyin. İade nakliyesinde meydana gelecek hasarlar garanti kapsamında değildir.

Yerel Banner Engineering Corp distribütörünüzle iletişime geçerek veya doğrudan (763) 544-3164 numaralı telefondan Banner'ı arayarak ürün onarımlarıyla ilgili yardım alın. Ana dilinize çevrilmiş dokümanlara www.bannerengineering.com adresindeki Banner web sitesinden erişebilir veya (763) 544-3164 numaralı telefondan doğrudan Banner ile iletişime geçebilirsiniz.

Banner Engineering Corp Limited Warranty

Banner Engineering Corp. warrants its products to be free from defects in material and workmanship for one year following the date of shipment. Banner Engineering Corp. will repair or replace, free of charge, any product of its manufacture which, at the time it is returned to the factory, is found to have been defective during the warranty period. This warranty does not cover damage or liability for misuse, abuse, or the improper application or installation of the Banner product.

THIS LIMITED WARRANTY IS EXCLUSIVE AND IN LIEU OF ALL OTHER WARRANTIES WHETHER EXPRESS OR IMPLIED (INCLUDING, WITHOUT LIMITATION, ANY WARRANTY OF MERCHANTABILITY OR FITNESS FOR A PARTICULAR PURPOSE), AND WHETHER ARISING UNDER COURSE OF PERFORMANCE, COURSE OF DEALING OR TRADE USAGE.

This Warranty is exclusive and limited to repair or, at the discretion of Banner Engineering Corp., replacement. **IN NO EVENT SHALL BANNER ENGINEERING CORP. BE LIABLE TO BUYER OR ANY OTHER PERSON OR ENTITY FOR ANY EXTRA COSTS, EXPENSES, LOSSES, LOSS OF PROFITS, OR ANY INCIDENTAL, CONSEQUENTIAL OR SPECIAL DAMAGES RESULTING FROM ANY PRODUCT DEFECT OR FROM THE USE OR INABILITY TO USE THE PRODUCT, WHETHER ARISING IN CONTRACT OR WARRANTY, STATUTE, TORT, STRICT LIABILITY, NEGLIGENCE, OR OTHERWISE.**

Banner Engineering Corp. reserves the right to change, modify or improve the design of the product without assuming any obligations or liabilities relating to any product previously manufactured by Banner Engineering Corp. Any misuse, abuse, or improper application or installation of this product or use of the product for personal protection applications when the product is identified as not intended for such purposes will void the product warranty. Any modifications to this product without prior express approval by Banner Engineering Corp will void

© Banner Engineering Corp. All rights reserved.
www.bannerengineering.com

the product warranties. All specifications published in this document are subject to change; Banner reserves the right to modify product specifications or update documentation at any time. Specifications and product information in English supersede that which is provided in any other language. For the most recent version of any documentation, refer to: www.bannerengineering.com.

For patent information, see www.bannerengineering.com/patents.

© Banner Engineering Corp. All rights reserved.