DUO-TOUCH Run Bar with STB Buttons

DUO-TOUCH Features

Self-checking ergonomic actuating devices



-RB1 without E-Stop

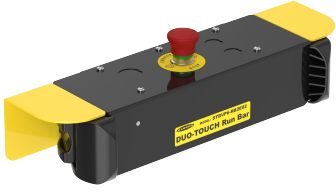

-RB1E02 with E-Stop

- Ergonomic design for reduced hand, wrist, and arm stresses associated with repeated switch operation; requires no physical pressure to operate
- Designed to minimize the possibility of defeat and accidental actuation
- Designed to comply with ANSI B11.19 and ISO 13851
- Robust 13 gauge (0.090 in) cold-rolled steel construction
- Models available with IP20 or IP65 construction
- Two diverse-redundant microcontroller-based photoelectric STB self-checking touch buttons:
  - Continuous internal self-checking operation
  - Immunity to ambient light, EMI and RFI interference
  - High excess gain to cut through heavy contamination
  - LED power, output, and fault indicators
- Emergency stop button on some models
- Designed to be interfaced with DUO-TOUCH SG two-hand control modules or other control systems that comply, at minimum, with ANSI NFPA 79 or IEC 60204-1 two-hand control requirements (for example, anti-tie down)
- Accessory EZ-LIGHT™ with blue, red, green, and amber LEDs available
- Accessory brackets and telescoping floor-mounted stands are available

WARNING:

- **Not a stand-alone safeguarding device**
- Failure to properly safeguard hazards according to a risk assessment, local regulations, and applicable standards might lead to serious injury or death.
- This Banner Engineering Corp. device is considered complementary equipment that is used to augment safeguarding that limits or eliminates an individual's exposure to a hazard without action by the individual or others.

DUO-TOUCH Models

Models	Run Bar Description	E-Stop Button	Touch Button Description	Connections
STBVP6-RB1	DUO-TOUCH Run Bar, IP20 metal construction	Not included	Two model STBVP6 optical touch buttons (solid-state complementary PNP outputs, polyetherimide upper housing)	Terminal strip connection
STBVP6-RB1E02		Model SSA-EBM-02L E-stop button (two N.C. safety contacts)		
STBVP6-RB1Q8		Not included		8-pin Mini-style QD
STBVP6-RB2	DUO-TOUCH Run Bar, IP65 metal construction	Not included		Terminal strip connection
STBVP6-RB2E02		Model SSA-EBM-02L E-stop button (two N.C. safety contacts)		
STBVP6-RB2Q8		Not included		8-pin Mini-style QD
DUO-TOUCH® Run Bar Kits	Call for assistance and availability			

NOTE: Models are available with relay outputs. To order a run bar with STBVR81 units, replace the "VP6" with "VR81" in the model number.

Important . . . Read This Before Proceeding!

In the United States, the functions that the Banner DUO-TOUCH Two-Hand Control Module is intended to perform are regulated by the Occupational Safety and Health Administration (OSHA). Whether or not any particular DUO-TOUCH Two-Hand Control Module installation meets all applicable OSHA requirements depends upon factors that are beyond the control of Banner Engineering Corp. These factors include the specific ways the safety module is applied, installed, wired, operated, and maintained.

Banner Engineering Corp. has attempted to provide complete application, installation, operation, and maintenance instructions. In addition, we suggest that any questions regarding the use or installation of this two-hand control safety system be directed to the factory applications department at the telephone numbers or address shown on the back cover of this manual.

The user of this Two-Hand Control safety module must ensure that all machine operators, maintenance personnel, electricians, and supervisors are thoroughly familiar with and understand all instructions regarding the installation, maintenance, and use of this system, and with the machinery upon which it is installed.

© Banner Engineering Corp. All rights reserved.

ПРОМЭЛЕКТРОНИКА/ sales@prom-elec.com

The user and any personnel involved with the installation and use of this safety module must be thoroughly familiar with all applicable OSHA regulations and ANSI standards. The regulations and standards, listed below, directly address the use of two-hand control systems. Banner Engineering Corp. makes no claim regarding a specific recommendation of any organization, the accuracy or effectiveness of any information provided, or the appropriateness of the provided information for a specific application.

The user has the responsibility to ensure that all local, state, and national laws, rules, codes, and regulations relating to the use of this Two-Hand Control module are satisfied. Extreme care is urged that all legal requirements are met and that all installation and maintenance instructions contained in this manual are followed.

US Standards Applicable for Use of Two-Hand Control Systems

ANSI B11 Standards for Machine Tools "Safety Requirements for the Construction, Care and Use"

Available from: Safety Director AMT – The Association for Manufacturing Technology 7901 Westpark Drive McLean, VA 22102 Tel.: 703-893-2900 Fax: 703-893-1151

NFPA79 "Electrical Standard for Industrial Machinery"

Available from: National Fire Protection Association 1 Batterymarch Park, P.O. Box 9101 Quincy, MA 02269-9101 Tel.: 800-344-3555

ANSI/RIA R15.06 "Safety Requirements for Industrial Robot and Robot Systems"

Available from: Robotic Industries Association 900 Victors Way, P.O. Box 3724 Ann Arbor, MI 48106 Tel.: 734-994-6088

International/European Standards

ISO 12100 Safety of Machinery – General Principles for Design – Risk Assessment and Risk Reduction

EN 60204-1 Electrical Equipment of Machines Part 1: General Requirements

ISO 13849-1 Safety of Machinery – Safety-Related Parts of Control Systems – Part 1: General Principles for Design

EN 13855 (EN 999) The Positioning of Protective Equipment in Respect to Approach Speeds of Parts of the Human Body

ISO 13851 Two-Hand Control Devices – Principles for Design and Selection

(also request a type C standard for your specific machinery.)

DUO-TOUCH Overview

The DUO-TOUCH® Run Bar with STB Self-Checking Optical Touch Buttons is designed to satisfy the ergonomic principles found in ANSI B11.TR1 to reduce the hand, wrist, and arm stresses associated with mechanical push buttons. The rugged 13-gauge steel housing is designed to prevent objects (such as loose clothing or debris) from inadvertently actuating the switch, which might accidentally block the sensing beam.

The STB Touch Buttons are touch-activated photoelectric devices designed to replace capacitive touch switches and mechanical push buttons. Their outputs activate when a finger is present in the yoke (touch area) of the switch, interrupting the button's infrared sensing beam. These buttons require no physical pressure to operate, and are immune to EMI, RFI, and ambient light interference.

The STB button's internal design incorporates dual microcontrollers, allowing a connection to a Banner DUO-TOUCH SG Two-Hand Control Safety Module (or other two-hand control systems designed to meet Type IIIC requirements per ISO 13851, and ISO 13849-1 category 4 requirements).

The microcontrollers in the STB buttons perform a continuous self-check: the emitter is continuously pulsed and receiver response is checked accordingly by the microcontrollers. STB touch buttons are designed to immediately detect any internal component failure, go into lockout mode, and indicate the failure with a flashing red Fault LED.

STB Series Touch Button LED Indicators	
Power On (green)	Steady ON when power is applied
Output, Fault (green)	Steady ON when button is activated OFF when button is not activated Flashing when a fault condition is detected

DUO-TOUCH Applications

The DUO-TOUCH Run Bar is intended for use as the initiation device in a two-hand control system for most powered machinery, when machine cycling is controlled by an individual.

The two-hand control system makes the operator a hostage while the hazard is present, thus limiting or preventing exposure of that operator to the hazard. The two-hand control actuators must be located in a way that hazardous motion is completed or stopped before the operator can release one or both of the buttons and reach the hazard (see Separation Distance).

© Banner Engineering Corp. All rights reserved.

Two-hand control systems must meet requirements found in several U.S. and international standards. See the machine-specific standard (for example, C-level in ISO/EN standards), ANSI NFPA 79, IEC 60204-1, ISO 13851, and ANSI B11.19 for complete information. Some of the requirements are:

- Simultaneous use of both hands (synchronous action): both buttons must be actuated within 500 ms of one another, even under single-fault conditions. Whenever this time is exceeded, both actuating devices must be released. This requirement reduces the possibility of intentional defeat and unintended initiation.
- Continuous actuation of both buttons during the hazardous situation. Releasing one or both buttons must cause the ceasing of the hazardous situation, and before the machine cycle can continue, both buttons must be released.
- When used in single-cycle or single-stroke mode, the machine control must provide an anti-repeat feature so that the operator must release the two-hand control actuators after each machine cycle, before a new cycle can be initiated.
- The actuating devices must be protected from accidental or unintended operation.
- When used for safeguarding, the interfacing must be at an appropriate level of safety circuit integrity as determined by a risk assessment. In the U.S., the required level of integration is Control Reliability (see ANSI B11.19). In many situations governed by ISO/IEC and EN regulations, the required integration for Type IIIC per ISO 13851 is Category 4 per ISO 13849-1.

To assist in complying with these requirements, Banner Engineering recommends interfacing the STB buttons of the run bar with a DUO-TOUCH SG Two-Hand Control Module, such as the model AT-FM-10K, AT-..M-13A, or other Type IIIC-compliant two-hand control system.

WARNING:

- **Use adequate point-of-operation guarding**
- Failure to properly guard hazardous machinery can result in a dangerous condition that could lead to serious injury or death.
- When properly installed, a two-hand control safety device provides protection only for the hands of the machine operator. It might be necessary to install additional safeguarding, such as safety light curtains, additional two-hand controls, and/or hard guards, to protect all individuals from hazardous machinery.

CAUTION:

- **Avoid installing hand controls in contaminated environments**—Severe contamination or other environmental influences could cause a slow response or false on condition of mechanical or ergonomic buttons.
- A slow response or false on condition could result in exposure to a hazard.
- The environment in which hand controls are installed must not adversely affect the means of actuation.

DUO-TOUCH Mechanical Installation

Mount the DUO-TOUCH Run Bar to maximize its ergonomic design and minimize the possibility of defeat.

To minimize the possibility of defeat, ISO 13851 recommends that the hand controls should be arranged on a horizontal (or nearly horizontal) surface, 1100 mm (43.3 in) above the floor. The Run Bar makes this installation easy.

To maximize ergonomics, ANSI B11.TR1 recommends that for the light to normally work the position should be 50 mm to 100 mm (2 in to 4 in) above or below elbow height. Elbow height should be determined and adjusted for each individual operator. Anthropometric tables provide a range for guidance (see ANSI B11.TR1 Annex A):

Tilting the run bar (using the bracket's multiple-hole adjustment) allows for varying operator heights while maintaining a neutral wrist position. This rotation should not exceed ±30º, especially when an emergency stop button is mounted on the top of the run bar. Hand and wrist posture is considered to be neutral when the hand is neither flexed nor extended beyond about 15º of the normally relaxed position.

© Banner Engineering Corp. All rights reserved.

Run Bar Location

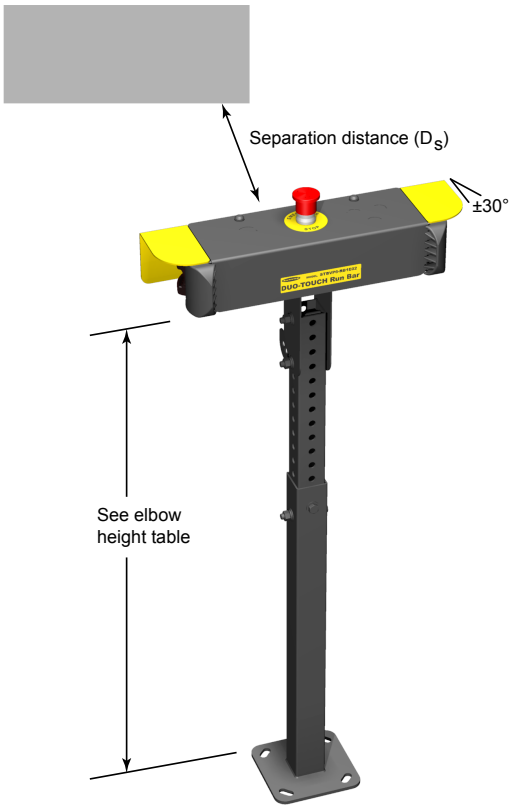

Torque Spec for RB2

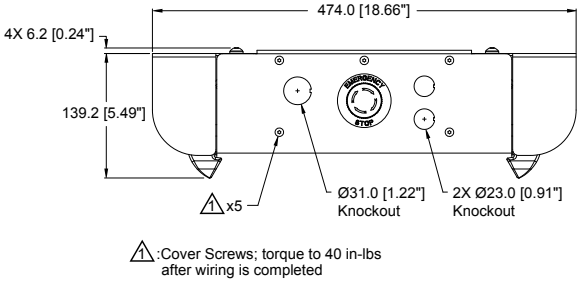

1 :Cover Screws; torque to 40 in-lbs after wiring is completed

Elbow Height (to floor, without shoes)	5%	95%
	Male/Female	Male/Female
Inches	39.2 / 36.5	45.4 / 42.3
Millimeters	995 / 926	1153 / 1074

Per ANSI B11.TR1, the most desirable location for controls used by a standing operator is a position directly in front of the operator, and at a height between chest and waist level. Frequent reaches should nominally be made within 350 mm to 450 mm (14 in to 18 in) from the center of the shoulder to the run bar. Only occasional reaches should be made within 550 mm to 650 mm (22 in to 26 in); avoid reaches farther than 650 mm (26 in).

ANSI BII.TR1 Recommended Maximum Reach Distances

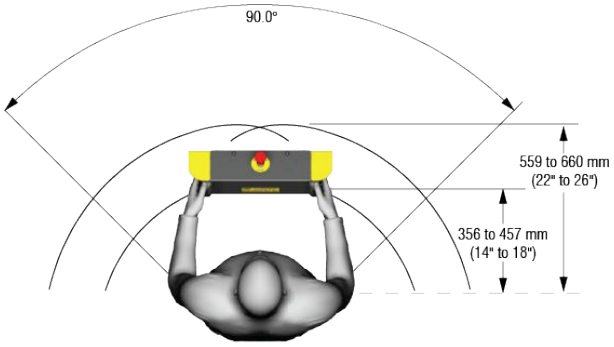

© Banner Engineering Corp. All rights reserved.

WARNING:
- **Mount hand controls at a safe distance from moving machine parts**
- Failure to establish and maintain the safety distance (minimum distance) could result in serious injury or death.
- Mount hand controls as determined by the applicable standard. The operator or other non-qualified persons must not be able to relocate the hand controls.

Two-Hand Control Separation (Safety) Distance

Both hand controls must be located far enough away from the nearest hazard point that the operator cannot reach the hazard with a hand or other body part before the hazardous motion ceases. This is the separation distance (or safety distance), and may be calculated as follows. The formulas differ slightly between U.S. and EU-Certified installations, but the concepts are similar.

Formulas for U.S. Installations	Formula for EU-Certified Installations
For Part-Revolution Clutch Machinery where the machine and its controls allow the machine to stop motion during the hazardous portion of the machine cycle, use the following formula: $D_s = K \times (T_s + T_r + T_h)$ ***For Full-Revolution Clutch Machinery*** where the machine and its controls are designed to complete a full machine cycle, once activated, use the following formula: $D_s = K \times (T_m + T_r + T_h)$	The formula used to calculate the minimum safety distance (S) from the nearest actuator to the danger zone is: $S = (K \times T) + C$

In all cases, where:

D_s = the separation (safety) distance in inches
S = the minimum safety distance in millimeters
K = OSHA/ANSI and ISO 13855 hand speed constant of 1600 mm/s (63 inches/second) (NOTE 1 below)
T = the overall stop time of the machine, measured from the actuation of the sensing function to the final ceasing of all motion.
T_s = the stop time (in seconds) of the machine, measured from the application of the stop”signal to the final ceasing of all motion, including stop times of all relevant control elements, and measured at maximum machine velocity (see NOTE 2)
T_r = 0.035 seconds (the response time of the Module as measured from the time either hand disengages a hand control.
T_h = the response time of the slowest hand control (from the time when a hand disengages that control until the switch opens; see NOTE 3)

T_m = the maximum time (in seconds) the machine takes to cease all motion after it has been tripped. For full-revolution clutch presses with only one engaging point, T_m is equal to the time necessary for one and one-half revolutions of the crankshaft. For full-revolution clutch presses with more than one engaging point, T_m is calculated as follows:

$$T_m = (1/2 + 1/N) \times T_{cy}$$

where:

N = number of clutch engaging points per revolution
T_{cy} = time (in seconds) necessary to complete one revolution of the crankshaft
C = the added distance due to depth penetration factor: 250 mm, per ISO 13855. The ISO 13855 **C** factor can be reduced to 0 if the risk of encroachment is eliminated, but the safety distance must always be 100 mm or greater.

NOTES:

1. The hand-speed constant (K) has been determined by various studies, and although these studies indicate speeds of 1600 mm/s (63 inches/second), 2000 mm/s (79 inches/second), to more than 2540 mm/s (100 inches/second), they are not conclusive determinations. The employer should consider all factors, including the physical ability of the operator, when determining the value of K to be used.
2. T_s is usually measured by a stop-time measuring device. If the specified machine stop time is used, add at least 20% as a safety factor to account for brake system deterioration. If the stop-time of the two redundant machine control elements is unequal, the slower of the two times must be used for calculating the separation distance.
3. T_h is usually insignificant for purely mechanical switches. However, Th should be considered for safety distance calculation when using electronic or electromechanical (in essence, powered) hand controls. For Banner Self-checking Touch Buttons (STBs), response time = 0.02 seconds.

Separation Distance (D_s) Calculation

The following example illustrates the use of the formula to calculate separation distance for a part-revolution clutch machine. This example uses 0.50 seconds as a typical value for T_s and 0.02 seconds for T_h:

K = 63 inches/second,
T_s = 0.50 seconds (measured by a stop-time measuring device)
T_r = 0.035 seconds
T_h = 0.02 seconds

© Banner Engineering Corp. All rights reserved.

$D_S = K \times (T_S + T_r + T_h)$

= 63 in (0.50 + 0.035 + 0.02)
= 35 in

In this example, both hand controls must be located no closer than 36 in from the nearest hazard point.

DUO-TOUCH Electrical Installation

Electrical installation of hand controls, the DUO-TOUCH SG Safety Module, and the interconnection to the machine control must be made by qualified personnel and must comply with NEC (National Electrical Code), ANSI/NFPA 79 or IEC 60204-1, and all applicable local standards.

It is not possible to give exact wiring instructions for a Safety Module that interfaces to a multitude of machine control configurations. The following guidelines are general in nature.

WARNING:

- **Risk of electric shock**
- Use extreme caution to avoid electrical shock. Serious injury or death could result.
- Always disconnect power from the safety system (for example, device, module, interfacing, etc.), guarded machine, and/or the machine being controlled before making any connections or replacing any component. Lockout/tagout procedures might be required. Refer to OSHA 29CFR1910.147, ANSI Z244-1, or the applicable standard for controlling hazardous energy.
- Make no more connections to the device or system than are described in this manual. Electrical installation and wiring must be made by a Qualified Person[1] and must comply with the applicable electrical standards and wiring codes, such as the NEC (National Electrical Code), NFPA 79, or IEC 60204-1, and all applicable local standards and codes.

Terminal Strip Connections

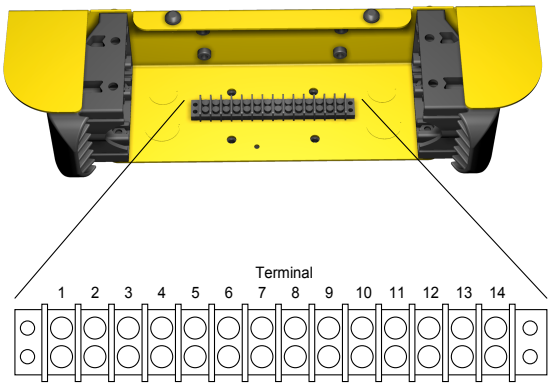

Terminal	Connection
1	STB 1 N.O. (black)
2	STB 1 COM (yellow, if used)
3	STB 1 N.C. (white)
4	STB +24 V DC (brown)
5	STB 0 V DC (blue)
6	STB 2 N.O. (black)
7	STB 2 COM (yellow, if used)
8	STB 2 N.C. (white)

NOTE: The STBVP6 hand control buttons are pre-wired to terminals 1, 3, 4, 5, 6, and 8. Terminals 2 and 7 are reserved for use of STBVR81 buttons.

Use the slots in the run bar housing to hold the cover for the terminal connection

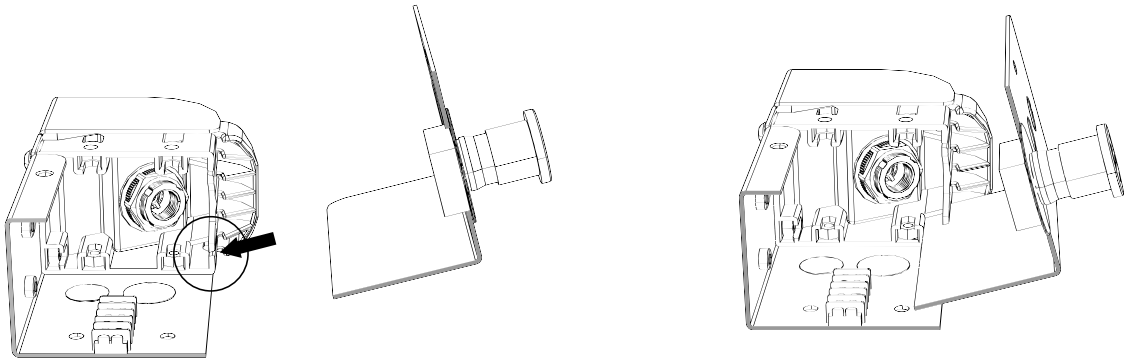

[1] A person who, by possession of a recognized degree or certificate of professional training, or who, by extensive knowledge, training and experience, has successfully demonstrated the ability to solve problems relating to the subject matter and work.

© Banner Engineering Corp. All rights reserved.

8-Pin Mini-Style Output QD Connector Male Face View	Mating Cable: QDS-8..C			SAE H1738-2 Alternate Color [1]
	Pin	Color	Function	
8-pin Mini-style QD Connection 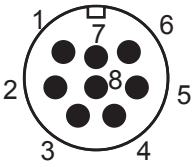	1	brown	+24 V DC	orange
	2	orange/black	N.O. STB2	blue
	3	orange	N.C. STB2	white/black
	4	white	N.C. STB1	black
	5	black	N.O. STB1	white
	6	blue	0 V DC	red
	7	green/yellow	Gnd/PE	green
	8	violet	Not Connected (future use)	red/black

Connection of STB Touch Buttons

To maintain a Type IIIC / Category 4 connection, both the normally open and the normally closed outputs of each STB button must be connected to a two-hand control system or module (for example, Banner model AT-FM-10K, AT-..M-13A, or Banner Safety Controllers) that meets the requirements listed in the Applications section and monitors the STB outputs such that if they are not in a complementary state (one open/non-conducting and one closed/conducting) the system will lock out and prevent further operation until the fault is repaired.

The +24 V DC supply power for the STB buttons must be the same supply that powers the two-hand control system or module. If a DUO-TOUCH SG safety module is used, use terminals Z1 and Z2 for supply voltage for the STB buttons.

STB Touch Button Block Diagram

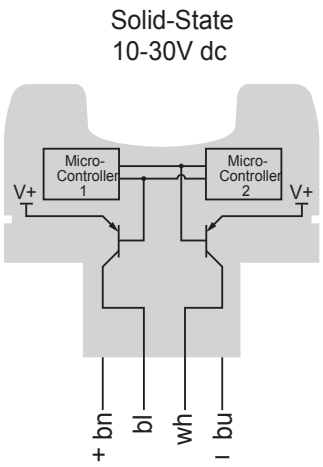

Connection to Two STB Touch Buttons with PNP Outputs

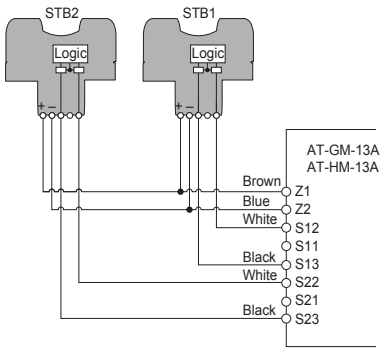

Connection of Two STB Buttons to the Banner Safety Controller

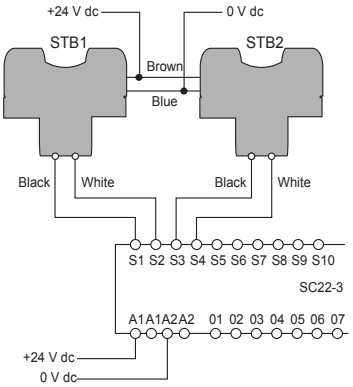

Connection of Emergency Stop Button

For models with an E-stop button, make the e-stop button connection at the screw terminals on the contact element mounted on the mounting adapter.

[1] Listed as a customer courtesy. Verify suitability of these cables for each application.

© Banner Engineering Corp. All rights reserved.

E-Stop wiring terminals



E-Stop wiring diagram

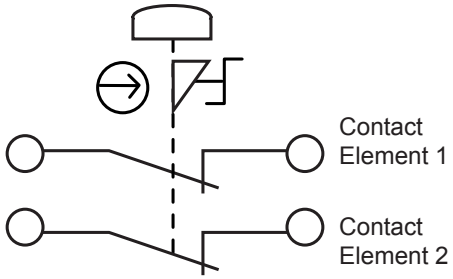

WARNING:

- **Connect Multiple E-Stop Switches in Series**
- Connecting the contacts of multiple e-stop switches in parallel to the e-stop safety module inputs defeats the switch contact monitoring ability of the safety module and creates an unsafe condition that could result in serious injury or death.
- When two or more e-stop switches are connected to the same e-stop safety module, connect the contacts of both switches together in series. Wire this series combination to the respective safety module input. Never connect the contacts of multiple e-stop switches in parallel to the e-stop safety module inputs.

Checkout Procedures

Checkout procedures are dependent on what two-hand control system or module is interfaced with the DUO-TOUCH Run Bar. At a minimum, the procedure should include the requirements listed in the Applications section and the following steps.

WARNING:

- **Do not use the system until the checkouts are verified**
- Attempts to use the guarded/controlled machine before these checks are verified could result in serious injury or death.
- If all these checks cannot be verified, do not attempt to use the safety system that includes the Banner Engineering Corp. device and the guarded/controlled machine until the defect or problem has been corrected.

1. Verify that all point-of-operation guards are in place and operating properly.
2. Verify the two actuating devices must be simultaneously engaged to actuate the machine (within ½ second).
3. **For single-cycle machines**: Verify that maintained engagement of the two actuating devices results in only one machine cycle.
4. **For part-revolution clutch machines**: Verify that release of either actuating device results in the immediate arrest of the machine motion.
5. Verify that the distance from each actuating device to the closest hazard point is not closer than the calculated safety distance.

Checkout procedures should be accomplished at installation (in essence, commissioning) and at periodic intervals, such as:

- Daily Checkout, to be performed at every power-up, shift change, and machine setup change, and to be performed by a designated person, appointed and identified in writing by the employer.
- Semi-Annual Checkout, to be performed at six-month intervals. This semi-annual checkout must be performed by a qualified person.* A copy of test results should be kept on or near the machine.

* Qualified person: A person who, by possession of a recognized degree or certificate of professional training, or who, by extensive knowledge, training, and experience, has successfully demonstrated the ability to solve problems relating to the installation, maintenance and use of the Two-Hand Control System.

Repairs

Contact Banner Engineering for troubleshooting of this device. **Do not attempt any repairs to this Banner device; it contains no field-replaceable parts or components.** If the device, device part, or device component is determined to be defective by a Banner Applications Engineer, they will advise you of Banner's RMA (Return Merchandise Authorization) procedure.

© Banner Engineering Corp. All rights reserved.

Obtain assistance with product repairs by contacting your local Banner Engineering Corp distributor or by calling Banner directly at (763) 544-3164. Access literature translated into your native language on the Banner website at www.bannerengineering.com or contact Banner directly at (763) 544-3164.

Para reparaciones de productos, por favor contacte a su distribuidor local de Banner Engineering o llame a Banner directamente al 00 1 (763) 544-3164. Vea la literatura traducida en su idioma en el sitio web Banner en www.bannerengineering.com o comuníquese con Banner directamente al 00 1 (763) 544-3164.

Pour vous aider lors de la réparation de produits, contactez votre distributeur Banner local our appelez directement Banner au (763) 544-3164. La documentation traduite dans votre langue est disponible sur le site internet de Banner www.bannerengineering.com ou contactez directement Banner au (763) 544-3164.

请联系当地的 Banner Engineering Corp 经销商或直接致电 Banner +1 (763) 544-3164，以获得产品维修帮助。请访问邦纳网站 www.bannerengineering.com 或直接拨打 +1 (763) 544-3164 联系邦纳，获取翻译成您母语的资料。

제품 수리에 대한 지원은 지역 Banner Engineering Corp 대리점에 문의하거나 Banner에 직접 (763) 544-3164로 문의하실 수 있습니다. 사용자의 모국어로 번역된 자료는 Banner 웹사이트 www.bannerengineering.com에서 액세스하거나 Banner에 직접 (763) 544-3164로 문의하실 수 있습니다.

IMPORTANT: If instructed to return the device, pack it with care. Damage that occurs in return shipping is not covered by warranty.

WARNING:

- **Do not abuse the module after failure**—If an internal fault has occurred and the module will not reset, do not tap, strike, or otherwise attempt to correct the fault with a physical impact to the housing.
- Failure to follow these instructions could result in serious injury or death.
- An internal relay might have failed in such a manner that its replacement is required. If the module is not immediately replaced or repaired, multiple simultaneous failures might accumulate such that the safety function cannot be guaranteed.

DUO-TOUCH Run Bar with STB Specifications

Power

Supply Voltage and Current: 10 V DC to 30 V DC

Power Consumption: approx. 1.8 W at 24 V DC (with no output load), for each STB

Supply Protection Circuitry: Protected against reverse polarity and transient voltages

Connections

Models STBVP6-RB1/-RB2 and -RB1E02/-RB2E02: Terminal strip connections inside run bar housing (STBs are pre-wired). E-stop button and EZ-LIGHT indicator (if used) are wired separately.

Models STBVP6-RB1Q8/-RB2Q8: 8-pin Mini-style quick-disconnect fitting

Construction

STB Buttons: Totally encapsulated, non-metallic enclosure; black polyetherimide yoke housing (see Application Note below); fiber-reinforced polyester base; electronics fully epoxy-encapsulated.

E-Stop Button: Polyamide red button with metal base.

Run Bar Housing: 13 ga (0.090 in) cold rolled steel with powder coat paint; polypropylene copolymer STB mount.

Ambient Light Immunity

Up to 100,000 lux

EMI/RFI Immunity

Immune to EMI and RFI noise sources, per IEC 947-5-2.

Application Notes

The STB's polyetherimide upper housing will become brittle with prolonged exposure to outdoor sunlight. Window glass effectively filters longer wavelength ultraviolet light and provides excellent protection from sunlight. Avoid contact with strong alkalis, hydrocarbons and fuels. Clean periodically using mild soap solution and a soft cloth. (Polycarbonate STB models are also available for use with the Run Bar; contact Factory for assistance.)

STB Indicators - 2 Green LEDs

Power: ON – power applied

Output/fault: ON – button is activated

Output/fault: OFF – button is deactivated

Output/fault: Flashing – internal fault or blocked button on power-up detected

Outputs

Configuration: Complementary PNP (sourcing) open-collector transistors

Protection Circuitry: Protected against false pulse on power-up; overload and short-circuit protection.

Response Time: 20 milliseconds ON/OFF

Output Rating

Maximum load: 150 mA

On-state saturation voltage: Less than or equal to 15 V at full load

Off-state leakage current: Less than 1 µA

Environmental Rating

STBVP6-RB1 Run Bar Models meet IP20

STBVP6-RB2 Run Bar Models meet IP65

Operating Conditions

Temperature: 0 °C to +50 °C (+32 °F to +122 °F)

90% at +50 °C maximum relative humidity (non-condensing)

© Banner Engineering Corp. All rights reserved.

STB Button Certifications

Banner Engineering BV
Park Lane, Culliganlaan 2F bus 3
1831 Diegem, BELGIUM

Turck Banner LTD Blenheim House
Blenheim Court
Wickford, Essex SS11 8YT
GREAT BRITAIN

STBVP6-RB2...Run Bar Certifications

Banner Engineering BV
Park Lane, Culliganlaan 2F bus 3
1831 Diegem, BELGIUM

Turck Banner LTD Blenheim House
Blenheim Court
Wickford, Essex SS11 8YT
GREAT BRITAIN

STBVP6-RB1E02 Dimensions

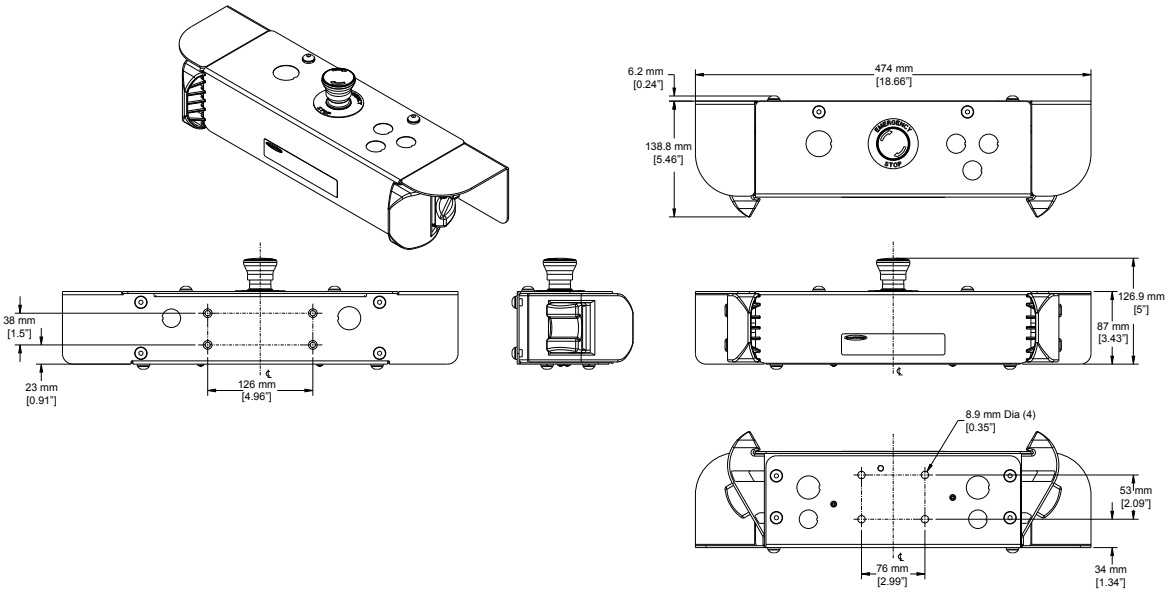

STBVP6-RB2E02 Dimensions

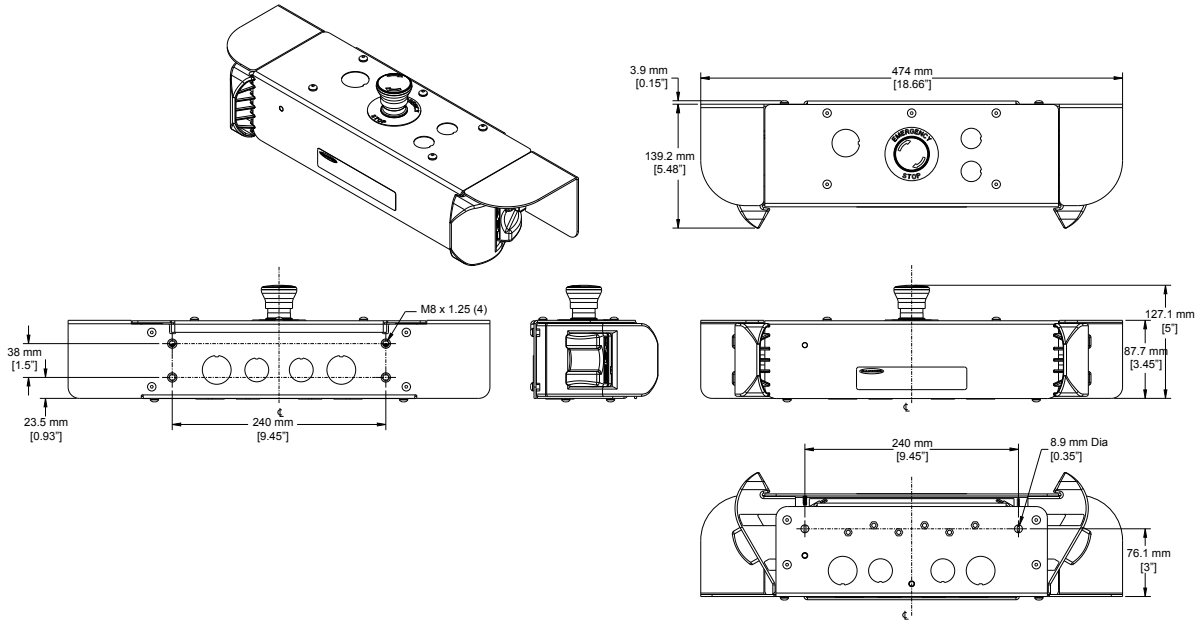

© Banner Engineering Corp. All rights reserved.

DUO-TOUCH Accessories

Mounting Brackets for the STBVP6-RB1 Run Bar

Model	Description	
STBA-RB1-MB1	• Pair of wall-mount brackets; run bar hangs on vertical surface • Slotted holes for vertical adjustment • Made of 12 ga cold-rolled steel with black powdercoat paint	
STBA-RB1-MB2	• Universal-mount bracket; allows run bar to mount to vertical stand or surface • Slotted holes for adjustment • Made of 12 ga cold-rolled steel with black powdercoat paint	
STBA-RB1-MB3	• Swivel-mount bracket; mounts to telescoping stands below • Holes for radial adjustment, 0°–30° in 10° increments • Made of 12 ga cold-rolled steel with black powder coat paint • Replacement part; included with telescoping stands STBA-RB1-S1 and STBA-RB1-S2	

Mounting Brackets for the STBVP6-RB2 Run Bar

Model	Description	
STBA-RB2-MB1	• Pair of wall-mount brackets; run bar hangs on vertical surface • Slotted holes for vertical adjustment • Made of 12 ga cold-rolled steel with black powdercoat paint	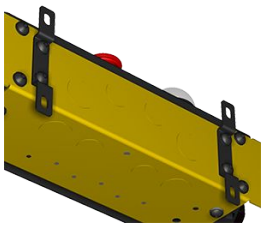
STBA-RB2-MB2	• Universal-mount bracket; allows run bar to mount to vertical stand or surface • Slotted holes for adjustment • Made of 12 ga cold-rolled steel with black powdercoat paint	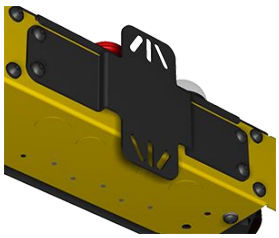
STBA-RB2-MB3	• Swivel-mount bracket; mounts to telescoping stands below • Holes for radial adjustment, 0°–30° in 10° increments • Made of 12 ga cold-rolled steel with black powdercoat paint • Replacement part; included with telescoping stands STBA-RB2-S1 and STBA-RB2-S2	

© Banner Engineering Corp. All rights reserved.

Telescoping Stands

Model	Description	
STBA-RB1-S1 **STBA-RB2-S1**	• Floor-mounted, telescoping stand; locates touch buttons 800 mm to 1232 mm (31.5 in to 48.5 in) above the floor surface • 150 mm (5.9 in) square stationary floor base with 4 mounting holes in corners • Telescoping square tubes made of 12 ga cold-rolled steel; base 1/4 in cold-rolled steel; black powdercoat paint • STBA-RB1-S1 includes swivel-mount bracket STBA-RB1-MB3 to mount STBVP6-RB1... Run Bars • • STBA-RB2-S1 includes swivel-mount bracket STBA-RB2-MB3 to mount STBVP6-RB2... Run Bars • See datasheet 135635 for more information on STBA-RB1-S1 • See datasheet 145295 for more information on STBA-RB2-S1	
STBA-RB1-S2 **STBA-RB2-S2**	• Free-standing, telescoping stand; locates touch buttons 800 mm to 1232 mm (31.5 in to 48.5 in) above the floor surface • 610 mm x 610 mm (24 in x 24 in) movable H-shaped floor base with mounting holes 560 mm (22 in) apart • Telescoping square tubes made of 12 ga cold-rolled steel; U-channel feet are 2 in W x 1 in H x 1/8 in thick cold-rolled steel; black powdercoat paint • STBA-RB1-S2 includes swivel-mount bracket STBA-RB1-MB3 to mount STBVP6-RB1... Run Bars • • STBA-RB2-S2 includes swivel-mount bracket STBA-RB2-MB3 to mount STBVP6-RB2... Run Bars • See datasheet 135635 for more information on STBA-RB1-S2 • See datasheet 145295 for more information on STBA-RB2-S2	

EZ-Light for Two-Hand Control

Model	Description	
T30GRYB11P (shown on left) **K50LGRYB11**P (shown on right)	• EZ-LIGHT for Two-Hand Control • Four-color indication: red, blue, green, and yellow • See data sheet 134100 for more information	

EZ-LIGHT Wiring Table					
LED Function	**Brown Wire**	**Gray Wire**	**Black Wire**	**White Wire**	**Typical Function**
Red ON	+V DC	-	-	-	Stop and/or Not Ready
Blue ON	+V DC	+V DC	-		Stopped, but Ready/ Enabled
Green ON	+V DC	+V DC	+V DC	-	Go
Yellow ON	+V DC	+V DC	+V DC	+V DC	Mute Condition
Red Flashing	Any other hookup combination				Abnormal State

NOTES:

- Blue wire connected to 0 V DC
- Supply Voltage and Current = 10 to 30 V DC, 60 mA max.

DUO-TOUCH® SG Two-Hand Control Modules, STB Compatible

N.C. = Normally Closed, N.O. = Normally Open

© Banner Engineering Corp. All rights reserved.

Model	Supply Voltage	Inputs	Safety Outputs	Output Rating	Auxiliary Outputs	Muting	Terminals
AT-FM-10K	24 V AC/DC	2 STB	2 N.O.	6 amps	-	-	Removable
AT-GM-13A	115 V AC/24 V DC		4 N.O.		1 NPN, 1 PNP, and 1 N.C.	-	
AT-HM-13A	230 V AC/24 V DC						

Safety Controllers

Safety Controllers provide a fully configurable, software-based safety logic solution for monitoring safety and non-safety devices.

For additional models and XS26 expansion modules, see instruction manual p/n 174868.

Safety controller models

Non-Expandable Models	Expandable Models	Description
SC26-2	**XS26-2**	26 convertible I/O and 2 redundant solid-state safety outputs
SC26-2d	**XS26-2d**	26 convertible I/O and 2 redundant solid-state safety outputs with display
SC26-2e	**XS26-2e**	26 convertible I/O and 2 redundant solid-state safety outputs with Ethernet
SC26-2de	**XS26-2de**	26 convertible I/O and 2 redundant solid-state safety outputs with display and Ethernet
SC10-2roe		10 inputs, 2 redundant relay safety outputs (3 contacts each) (ISD and Ethernet compatible)
	XS26-ISDd	26 inputs, 2 redundant solid-state safety outputs with display, Ethernet, and 8 ISD channels

DUO-TOUCH Cordsets

8-Pin 7/8-in Female Cordsets					
Model	**Length**	**Style**	**Dimensions**	**Pinout (Female)**	
QDS-815C	4.572 m (15 ft)	Straight	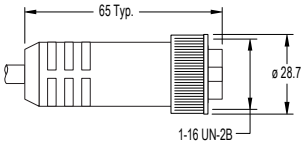	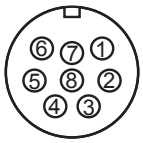	
QDS-825C	7.620 m (25 ft)				
QDS-850C	15.24 m (50 ft)				
QDS-875C	22.86 m (75 ft)			1 = Brown 2 = Or/Bk 3 = Orange 4 = White	5 = Black 6 = Blue 7 = Gn/Ye 8 = Violet

STB Self-Checking Touch Button Replacement Parts

Model	Description	Product
STBVP6-78574	• Solid-state complementary PNP outputs • Polyetherimide upper housing • 300 mm (12 inches), 4-wire PVC-jacketed cable	

E-Stop Push-Button Components Replacement Parts

IMPORTANT: Model numbers have been updated. 8-LM2T replacement parts are not compatible with LPS/LPX models. Please contact Banner Engineering with any questions.

© Banner Engineering Corp. All rights reserved.

SSA-EBM-02L Metal E-stop button with 2 normally closed (N.C.) contacts	
LPSB6644 • 22.5 mm metal button (mounting adapter sold separately) • Twist to release, mechanical latching ISO 13850 (EN 418) compliant • Diameter 40 mm (without mounting adapter).	
LPXAU120M Metal mounting adapter for metal button	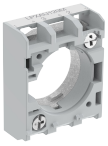
LPXC01 • Normally closed (N.C.) positively driven contact element • Direct (positive) opening operation per IEC/EN 60947-5-1	
LPXC10 Normally open (N.O.) auxiliary contact element	
LPXAU115 • 60 mm diameter • Non-adhesive plastic legend with “Emergency Stop” inscription	

Telescoping Stand Replacement Parts

Models	Description	Product
STBA-RB1-SGP	Quick-release gravity pin to allow rotation of Run Bar on the telescoping stand. (Can also be used for quick height adjustment of stand.)	

© Banner Engineering Corp. All rights reserved.

Banner Engineering Corp Limited Warranty

Banner Engineering Corp. warrants its products to be free from defects in material and workmanship for one year following the date of shipment. Banner Engineering Corp. will repair or replace, free of charge, any product of its manufacture which, at the time it is returned to the factory, is found to have been defective during the warranty period. This warranty does not cover damage or liability for misuse, abuse, or the improper application or installation of the Banner product.

THIS LIMITED WARRANTY IS EXCLUSIVE AND IN LIEU OF ALL OTHER WARRANTIES WHETHER EXPRESS OR IMPLIED (INCLUDING, WITHOUT LIMITATION, ANY WARRANTY OF MERCHANTABILITY OR FITNESS FOR A PARTICULAR PURPOSE), AND WHETHER ARISING UNDER COURSE OF PERFORMANCE, COURSE OF DEALING OR TRADE USAGE.

This Warranty is exclusive and limited to repair or, at the discretion of Banner Engineering Corp., replacement. **IN NO EVENT SHALL BANNER ENGINEERING CORP. BE LIABLE TO BUYER OR ANY OTHER PERSON OR ENTITY FOR ANY EXTRA COSTS, EXPENSES, LOSSES, LOSS OF PROFITS, OR ANY INCIDENTAL, CONSEQUENTIAL OR SPECIAL DAMAGES RESULTING FROM ANY PRODUCT DEFECT OR FROM THE USE OR INABILITY TO USE THE PRODUCT, WHETHER ARISING IN CONTRACT OR WARRANTY, STATUTE, TORT, STRICT LIABILITY, NEGLIGENCE, OR OTHERWISE.**

Banner Engineering Corp. reserves the right to change, modify or improve the design of the product without assuming any obligations or liabilities relating to any product previously manufactured by Banner Engineering Corp. Any misuse, abuse, or improper application or installation of this product or use of the product for personal protection applications when the product is identified as not intended for such purposes will void the product warranty. Any modifications to this product without prior express approval by Banner Engineering Corp will void the product warranties. All specifications published in this document are subject to change; Banner reserves the right to modify product specifications or update documentation at any time. Specifications and product information in English supersede that which is provided in any other language. For the most recent version of any documentation, refer to: www.bannerengineering.com.

For patent information, see www.bannerengineering.com/patents.

Document title: DOU-TOUCH Run Bar with STB Buttons
Part number: 131634
Revision: H
Original Instructions
© Banner Engineering Corp. All rights reserved.

131634

© Banner Engineering Corp. All rights reserved.