SLU4 Slot Sensor

Instruction Manual

Original Instructions
230091 Rev. A
7 September 2022
© Banner Engineering Corp. All rights reserved

230091

ПРОМЭЛЕКТРОНИКА/ sales@prom-elec.com

Contents

1 Product Description 3
1.1 Models 3
1.2 Features and Indicators 3
1.2.1 Display 3
1.2.2 Buttons 4
2 Installation 5
2.1 Mount the Sensor 5
2.2 Wiring 5
3 Sensor Setup 6
3.1 Sensor Menu 6
3.2 TEACH Procedures 7
3.2.1 Gap TEACH 8
3.2.2 Two-Point TEACH 8
3.2.3 Dynamic TEACH 9
3.3 Remote Input 9
4 Specifications 10
4.1 Dimensions 11
5 Accessories 12
5.1 Cordsets 12
6 Product Support 13
6.1 Cleaning and Maintenance 13
6.2 Contact Us 13
6.3 Banner Engineering Corp. Limited Warranty 13

1 Product Description

Ultrasonic Label Sensors for Detection of Clear Labels



- Ultrasonic label sensor for reliable detection of clear and opaque labels
- Rugged anodized aluminum housing with removable stainless steel gap plate
- Fast, highly accurate and precise label detection
- OLED Alphanumeric display for easy configuration and monitoring

WARNING:
- **Do not use this device for personnel protection**
- Using this device for personnel protection could result in serious injury or death.
- This device does not include the self-checking redundant circuitry necessary to allow its use in personnel safety applications. A device failure or malfunction can cause either an energized (on) or de-energized (off) output condition.

1.1 Models

Model	Supply Voltage	Output Type	Connection
SLU4-PN-2M	12 V DC to 30 V DC	Bipolar NPN/PNP	1.8 m (6 ft) unterminated 5-wire PVC cable
SLU4-PN-Q8			Integral 5-pin M12 male quick-disconnect connector
SLU4-PN-Q7			Integral 4-pin M8 male quick-disconnect connector
SLU4-BM-Q7		Selectable NPN or PNP	

1.2 Features and Indicators

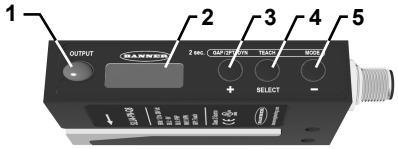

1. Output indicator
2. Display
3. (GAP/2PT/DYN)(+)
4. (TEACH)(SELECT)
5. (MODE)(-)

1.2 Output Indicator

- Amber LED illuminates when outputs are ON
- Flashes when short circuit or overload detected

1.2.1 Display

Use the display to view menu options and other information.

Figure 1. Display in Run Mode

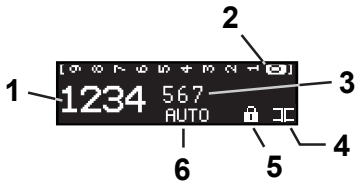

1. Signal strength
2. Contrast indicator (0 to 9)
3. Threshold number
4. Output in gap or on label
5. Button lock or unlock
6. Auto adjust on/off (AUTO)

1.2.2 Buttons

Use the sensor buttons to program the sensor.

(GAP/2PT/DYN)(+)

- Press and hold for 2 seconds to access and select different TEACH methods
- Press to increase the contrast threshold value
- Scroll through settings in the menu
- Manually adjust the threshold number while in Run mode

(TEACH)(SELECT)

- Press and hold for 2 seconds to initiate the TEACH process
- Select settings in MENU options

(MODE)(-)

- Press and hold for 2 seconds to access the menu
- Scroll through settings in the menu
- Manually adjust the threshold number while in Run mode

2 Installation

2.1 Mount the Sensor

Mount the SLU4 directly and securely using the clearance holes on the side of the sensor (bolts not included).

To lessen the effects of web flutter, position the bottom fork of the sensor slightly above the path of the web so that the web can glide over the bottom of the fork with slight tension.

2.2 Wiring

Figure 2. M8 Models—bimodal with remote input

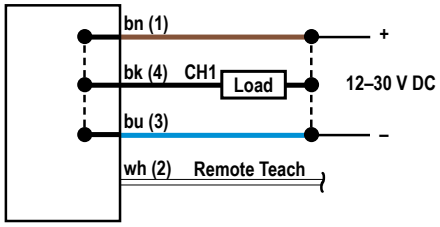

The black wire is selectable NPN or PNP via the menu. This selection causes the remote input to be active low or active high.

Figure 3. M8 model, bipolar

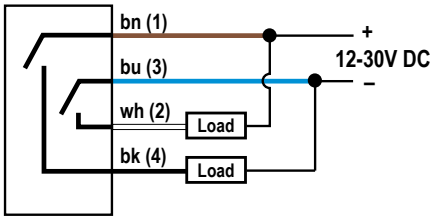

Figure 4. M8 Male Connector



1. Brown
2. White
3. Black
4. Blue

Figure 5. M12 and cabled models—bipolar with remote input

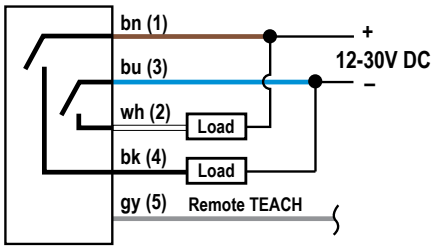

Figure 6. M12 Male Connector

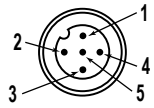

1. Brown
2. White
3. Blue
4. Black
5. Gray

3 Sensor Setup

Use the following images and instructions to program the sensor for use.

The default TEACH mode is Gap TEACH. In this mode, the sensor is looking for a gap between the labels.

3.1 Sensor Menu

Access the menu from run mode by pressing and holding **MODE** for 2 seconds.

Use **+** and **–** buttons to navigate through the menu. Press **SELECT** to select a menu option and access the submenus. Use **+** and **–** to navigate through the submenus. Press **SELECT** to select a submenu option and return to the top menu or press and hold **SELECT** for longer than 2 seconds to select a submenu option and return immediately to run mode.

To exit Setup mode and return to Run mode, navigate to End and press **SELECT.**

Figure 7. Menu Map

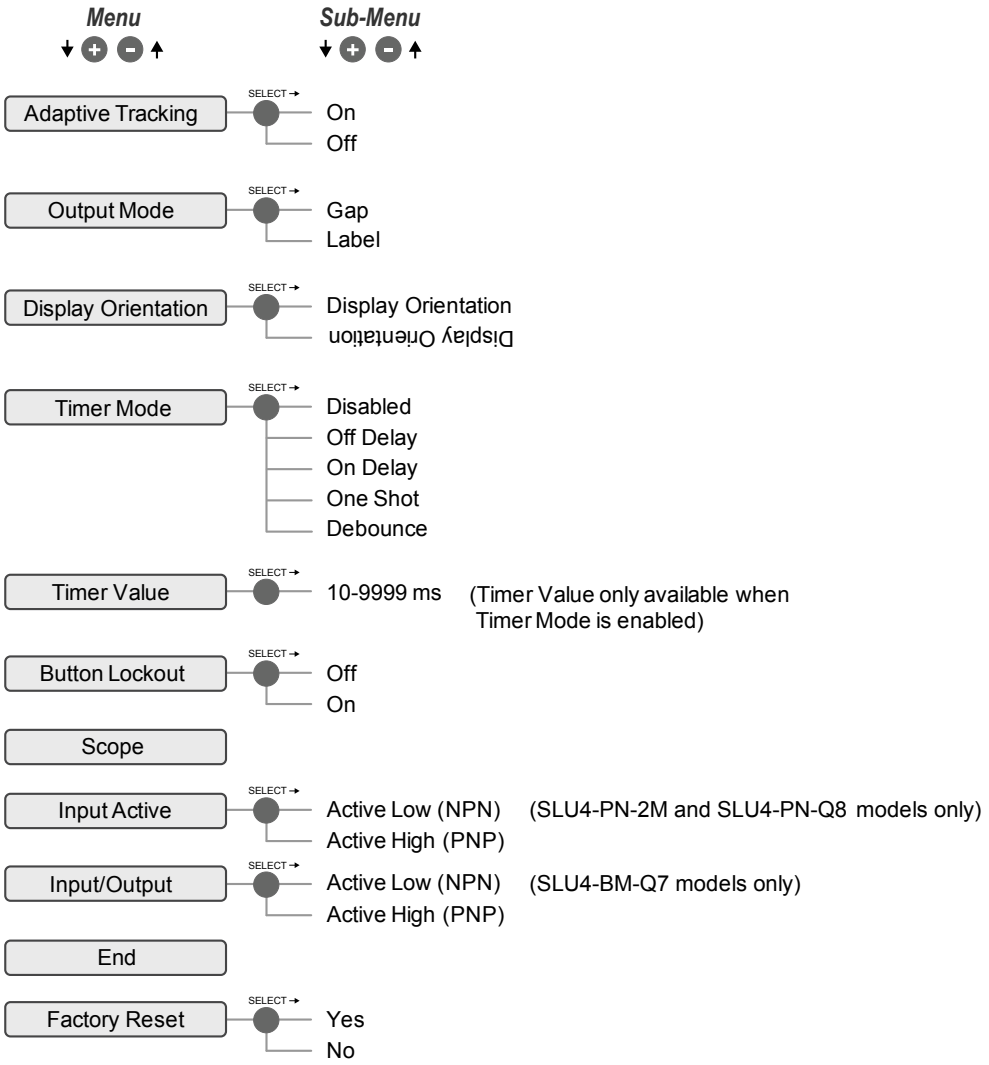

The following are menu options:

Adaptive Tracking

Evaluates signal levels and makes automatic adjustments to keep the sensor in optimum response levels.

Output Mode

Change from GAP ( ) to LABEL ( ). GAP means the output will be on when the label is not present under the transducer. LABEL means the output will be on when the label is under the transducer.

= Outputs on the Label

= Outputs in the Gap

Display Orientation

Toggles the orientation of the display.

Timer Mode

Selects the output timing delay to be set:

Off Delay—Outputs stay on for set time after duration of input.

On Delay—Outputs turn on when input exceeds set time.

One Shot—Outputs turn on for set time when triggered by input.

Debounce—Output changes immediately when a change in detect state occurs. Then, a timer prevents the output from switching again until the timer expires. This behavior occurs on both the leading and trailing edges of the object.

Figure 8. Output Timing Delays

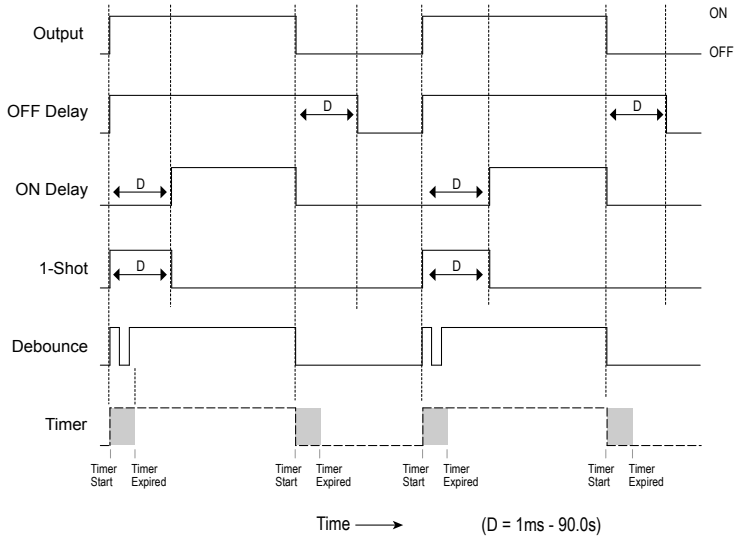

Timer Value

Sets the delay timer. This menu item is available only if a Timer Mode has been selected. The range is 1 ms to 9999 ms.

Button Lockout

Locks the sensor for tamper-free operation.

The sensor can be taught if it is locked. To unlock the sensor, toggle from Lock (🔒) to Unlock (no symbol).

Scope

Allows the operator to visually inspect the current setup for repeatability. The sensor scope also reveals any nominal setup issues or sensitivities to label or gap thickness changes. To shorten the time between signals, press **+**. To lengthen the time between signals, press **–**.

Input Active (SLU4-PN-2M and SLU4-PN-Q8 models only)

Sets the remote input to either Active High or Active Low to dictate the type of signal needed to program the sensor remotely. For more details, see Remote Input on page 9.

Input/Output (SLU4-BM-Q7 model only)

Sets the output to either NPN or PNP. Also sets the remote input to either Active High or Active Low to dictate the type of signal needed to program the sensor remotely. For more details, see Remote Input on page 9.

End

Returns to run mode.

Factory Reset

Resets the sensor to factory defaults.

3.2 TEACH Procedures

To change between TEACH modes, press and hold the **GAP/2PT/DYN** button for 2 seconds.

Use the **+/-** buttons to navigate through the menu. When the desired TEACH mode is on the screen, press the **SELECT** button to confirm.

3.2.1 Gap TEACH

The sensor sets a threshold based on the gap between two labels.

1. Place the label web so that it is centered on the arrow.

Figure 9. Align Label to Arrow

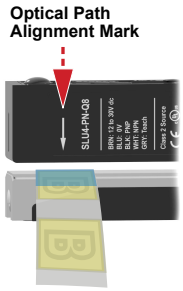

2. Position the gap between the labels in the center of the sensor using the alignment line as shown.
   When viewing from the top of the sensor, use the output LED to center the gap between the labels.

Figure 10. Align Gap to Line

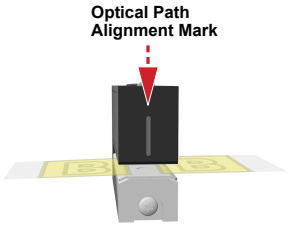

Note: For a simpler TEACH, remove one label to create a larger gap.

3. Place label webbing so that it slides along the bottom of the sensor gap plate.

Figure 11. Gentle Tension

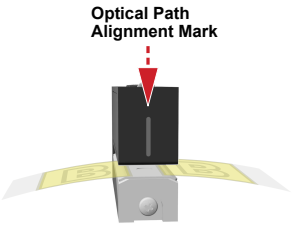

   This ensures a more consistent setup and performance.
4. Press and hold the **TEACH** button for 2 seconds.
   The display shows "Gap Set", then returns to Run mode.

The + and - buttons can be used to manually fine tune the sensor to the application.

3.2.2 Two-Point TEACH

The sensor sets a threshold based on the gap and label of the web.

1. Position the gap between the alignment markers on the sensor.

Note: For a simpler TEACH, remove one label to create a larger gap.

2. Press and hold the **TEACH** button for 2 seconds.
   The display shows "Tap to Begin Gap Set".
3. Press the **TEACH** button.
   The display shows "Gap Set" then "Tap to Begin Label Set".
4. Position the label under the alignment marker on the sensor.

5. Press the **TEACH** button.
   The display shows "Label Set", then returns to Run mode.

3.2.3 Dynamic TEACH

The sensor sets a threshold during machine run conditions.

1. Position the labels under the alignment markers on the sensor and set the labels in motion.
2. Press and hold the **TEACH** button for 2 seconds.
   The display shows "Dynamic Set: Tap Teach to End".
3. Press the **TEACH** button.
   The sensor returns to Run mode.

3.3 Remote Input

Use the remote input to program the sensor remotely.

The remote input provides limited programming options. The remote input is either Active High (PNP) or Active Low (NPN) depending on the Input Active setting. For Active High (PNP), connect the white wire to 24 V DC with a remote switch connected between the wire and 24 V DC. For Active Low, connect the white wire to ground (0 V DC) with a remote switch connected between the wire and ground. Pulse the remote input according to the diagram and the instructions provided in this manual.

The length of the individual programming pulses is equal to the value **T: 0.04 seconds ≤ T ≤ 0.4 seconds**.

Remote Input Signals

Note: Waveforms shown correspond to PNP input mode.

Figure 12. Gap Set



Pulse once, 40 ms to 400 ms.

Figure 13. Label Set



Pulse twice, 40 ms to 400 ms, with 40 ms to 400 ms idle time between pulses.

Figure 14. Dynamic Set



Hold the remote input on for more than 750 ms, while pulling the labels and gaps through the sensor, then release the remote input line. The sensor returns to Run mode.

4 Specifications

Supply Voltage and Current
12 V DC to 30 V DC
Polarity Protected

Note: For use in Class 2 circuits

95 mA at 12 V DC, 45 mA at 30 V DC

Digital Outputs
(1) NPN and (1) PNP open collector output 150mA maximum; <2 V residual voltage
On SLU4-BM-Q7, NPN & PNP are user-selectable
Protected against output short-circuit

Remote TEACH Input
Momentary sinking or sourcing input;1.2 mA maximum; software selectable

Hysteresis
Dynamic, adjusted by TEACH

Response Time
200 µs

Repeatability
125 µs

Threshold Set
1-Point, 2-Point, or Dynamic TEACH; manually or remotely

Threshold Adjust
Manual or AUTO adjust

Output Timers
On Delay, Off Delay, One Shot, or Debounce

Slot Width
4 mm

Indicators
Display: Includes contrast indicator, numerical display, set point and trigger point, and all sensor options and modes
Amber LED output indicator: Illuminates when the sensor's output transistors are ON

Note: Note: If output LED flashes on power up, a short circuit condition exists.

Construction
Chemical resistant, high impact aluminum housing
Conforms to heavy industry grade CE requirements

Connection
Integral 5-pin M12 male quick-disconnect connector, Integral 4-pin M8 male quick-disconnect connector, or 1.8 m (6 ft) unterminated 5-wire PVC cable, depending on model

Environmental Rating
NEMA 4X, NEMA 6P, and IP65

Ambient Temperature
+4 °C to +50 °C (+39 °F to +122 °F)

Certifications
RoHS compliant

c UL us LISTED

CE

Banner Engineering Europe
Park Lane, Culliganlaan 2F
bus 3, 1831 Diegem,
BELGIUM

UK CA

Turck Banner LTD Blenheim House, Blenheim Court,
Wickford, Essex SS11 8YT,
Great Britain

4.1 Dimensions

All measurements are listed in millimeters [inches], unless noted otherwise.

M12 Quick Disconnect Models

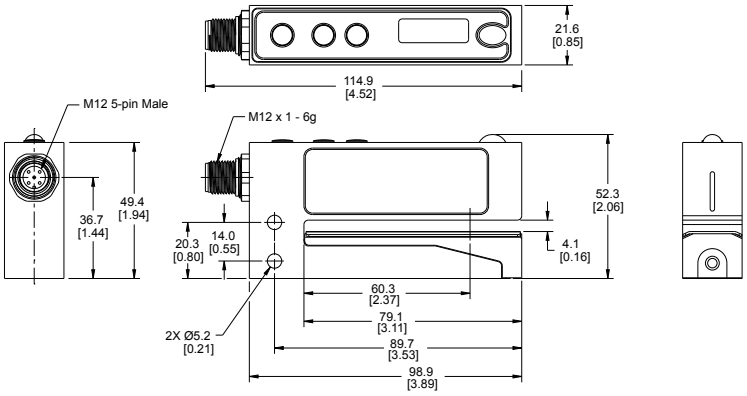

M8 Quick Disconnect Models

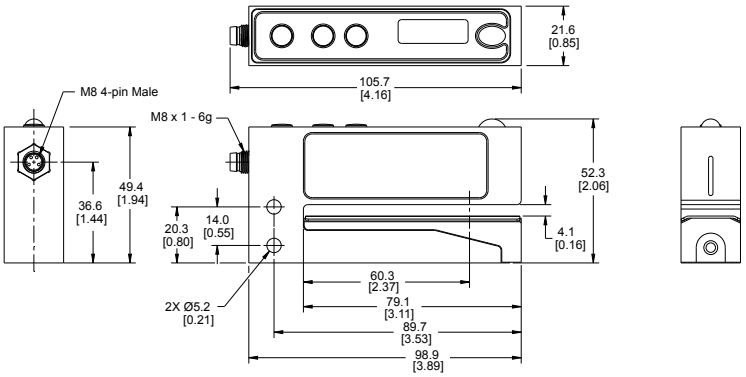

Cable Models

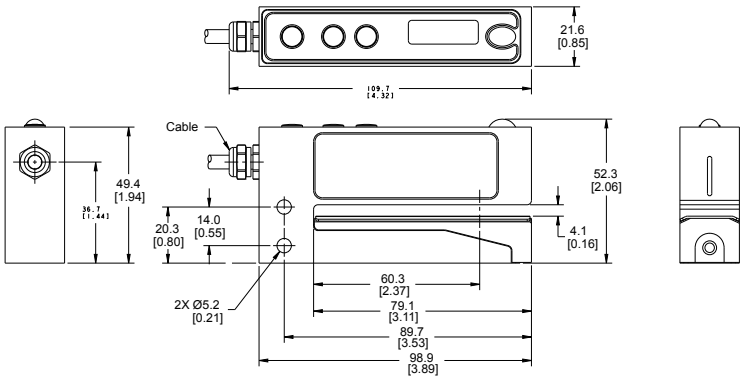

5 Accessories

5.1 Cordsets

4-Pin Threaded M8 Cordsets—Single Ended					
Model	**Length**	**Style**	**Dimensions**	**Pinout (Female)**	
PKG4M-2	2.04 m (6.68 ft)	Straight	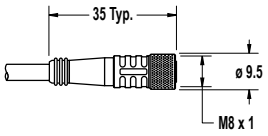	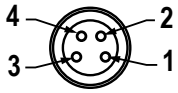	1 = Brown 2 = White 3 = Blue 4 = Black
PKG4M-5	5 m (16.4 ft)				
PKG4M-9	9.04 m (29.6 ft)				
PKW4M-2	2 m (6.56 ft)	Right Angle	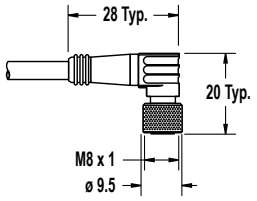	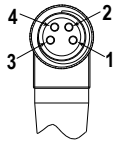	
PKW4M-5	5 m (16.4 ft)				
PKW4M-9	9 m (29.5 ft)				

5-Pin Threaded M12 Cordsets—Single Ended				
Model	**Length**	**Style**	**Dimensions**	**Pinout (Female)**
MQDC1-501.5	0.5 m (1.5 ft)	Straight	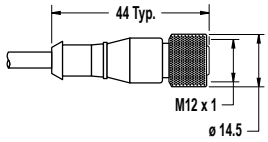	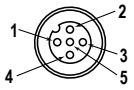 1 = Brown 2 = White 3 = Blue 4 = Black 5 = Gray
MQDC1-503	0.9 m (2.9 ft)			
MQDC1-506	2 m (6.5 ft)			
MQDC1-515	5 m (16.4 ft)			
MQDC1-530	9 m (29.5 ft)			
MQDC1-560	18 m (59 ft)			
MQDC1-506RA	2 m (6.5 ft)	Right-Angle	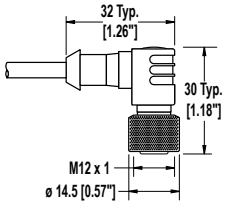	
MQDC1-515RA	5 m (16.4 ft)			
MQDC1-530RA	9 m (29.5 ft)			
MQDC1-560RA	19 m (62.3 ft)			

6 Product Support

6.1 Cleaning and Maintenance

Clean the sensor when soiled and use with care.

Handle the sensor with care during installation and operation. Sensor windows soiled by fingerprints, dust, water, oil, etc. may create stray light that may degrade the peak performance of the sensor. Blow the window clear using filtered, compressed air, then clean as necessary using only water and a lint-free cloth.

6.2 Contact Us

Banner Engineering Corp. headquarters is located at:

9714 Tenth Avenue North
Minneapolis, MN 55441, USA
Phone: + 1 888 373 6767

For worldwide locations and local representatives, visit www.bannerengineering.com.

6.3 Banner Engineering Corp. Limited Warranty

Banner Engineering Corp. warrants its products to be free from defects in material and workmanship for one year following the date of shipment. Banner Engineering Corp. will repair or replace, free of charge, any product of its manufacture which, at the time it is returned to the factory, is found to have been defective during the warranty period. This warranty does not cover damage or liability for misuse, abuse, or the improper application or installation of the Banner product.

THIS LIMITED WARRANTY IS EXCLUSIVE AND IN LIEU OF ALL OTHER WARRANTIES WHETHER EXPRESS OR IMPLIED (INCLUDING, WITHOUT LIMITATION, ANY WARRANTY OF MERCHANTABILITY OR FITNESS FOR A PARTICULAR PURPOSE), AND WHETHER ARISING UNDER COURSE OF PERFORMANCE, COURSE OF DEALING OR TRADE USAGE.

This Warranty is exclusive and limited to repair or, at the discretion of Banner Engineering Corp., replacement. **IN NO EVENT SHALL BANNER ENGINEERING CORP. BE LIABLE TO BUYER OR ANY OTHER PERSON OR ENTITY FOR ANY EXTRA COSTS, EXPENSES, LOSSES, LOSS OF PROFITS, OR ANY INCIDENTAL, CONSEQUENTIAL OR SPECIAL DAMAGES RESULTING FROM ANY PRODUCT DEFECT OR FROM THE USE OR INABILITY TO USE THE PRODUCT, WHETHER ARISING IN CONTRACT OR WARRANTY, STATUTE, TORT, STRICT LIABILITY, NEGLIGENCE, OR OTHERWISE.**

Banner Engineering Corp. reserves the right to change, modify or improve the design of the product without assuming any obligations or liabilities relating to any product previously manufactured by Banner Engineering Corp. Any misuse, abuse, or improper application or installation of this product or use of the product for personal protection applications when the product is identified as not intended for such purposes will void the product warranty. Any modifications to this product without prior express approval by Banner Engineering Corp will void the product warranties. All specifications published in this document are subject to change; Banner reserves the right to modify product specifications or update documentation at any time. Specifications and product information in English supersede that which is provided in any other language. For the most recent version of any documentation, refer to: www.bannerengineering.com.

For patent information, see www.bannerengineering.com/patents.

Index

2PT 4

A

adaptive tracking 6

C

cleaning 13

D

DYN 4

G

GAP 4

L

lockout 6

M

maintenance 13
menu map 6
mode
    output 6
    timer 6
MODE 4

O

output indicator 3
output mode 6

S

SELECT 4

T

TEACH 4
timer mode 6