SGSA-S Series Enclosures

Datasheet

SGSA-S Series Enclosures for the mounted protection of SGS Grid Sensors and mirrors

- Eight models available: four with corner mirrors, four to house SGS Grid Sensors
- Models meet ANSI/RIA 15.06 and ISO 13855 standards for beam spacing
- Robust aluminum housing with a tough safety yellow finish
- Independently adjustable mirrors to simplify alignment
- Circular bubble level on top of enclosure with three leveling screws in base
- Base allows enclosure to rotate up to 20°

Banner SGSA-S Series Enclosures are designed specifically for use with Banner SGS Grid models. The enclosures are constructed of a powder coated extruded aluminum housing with an anodized aluminum top plate and mounting base. The enclosures have leveling and rotational positioning capabilities. Units with mirrors have three adjustment screws per mirror to optimize beam direction. The enclosures are available in eight different models to accommodate ANSI/RIA 15.06 and ISO 13855 beam spacing standards. The rear-surfaced glass mirrors are rated at 85% efficiency per mirror and reduce maximum range by 8% per mirror.

Important: Reduced Sensing Range—Sensing range is reduced to 85% efficiency per mirror (8% range per mirror).

WARNING:

- **Maintain the required separation distance**
- Failure to calculate this distance correctly and to maintain minimum separation distance can result in serious injury or death.
- The light screen produced by the optical safety system sensors must be placed at a minimum safe distance from the dangerous motion of the machine being guarded. This necessary minimum distance is called the separation distance and is discussed in the appropriate Grid manuals.

Models

Models	SGS Grid Models	Number of Windows	Enclosure Height L1	Protected Height	Distance From Floor to Bottom Window L2	Distance Between Beams L3	Application Standard
SGSA4-S300 **SGSA4-S300-M**	SGSxx4-300Qxx	4	1543 mm (60.75 in)	900 mm (35.4 in)	300 mm (11.8 in)	300 mm (11.8 in)	ANSI/RIA R15.06 ISO 13855
SGSA3-S400 **SGSA3-S400-M**	SGSxx3-400Qxx	3	1238 mm (48.78 in)	800 mm (31.5 in)	300 mm (11.8 in)	400 mm (15.8 in)	ANSI/RIA R15.06 ISO 13855
SGSA4-S400 **SGSA4-S400-M**	SGSxx4-400Qxx	4	1618 mm (63.69 in)	1200 mm (47.2 in)	300 mm (11.8 in)	400 mm (15.8 in)	ANSI/RIA R15.06 ISO 13855
SGSA2-S500 **SGSA2-S500-M**	SGSxx2-500Qxx	2	1035 mm (40.75 in)	500 mm (19.7 in)	400 mm (15.8 in)	500 mm (19.7 in)	ANSI/RIA R15.06 ISO 13855

Model numbers with suffix **-M** include vertical mirrors for perimeter-guarding applications. For L1, L2, and L3 locations, see *Figure 1* on page 1.

Install the Enclosure

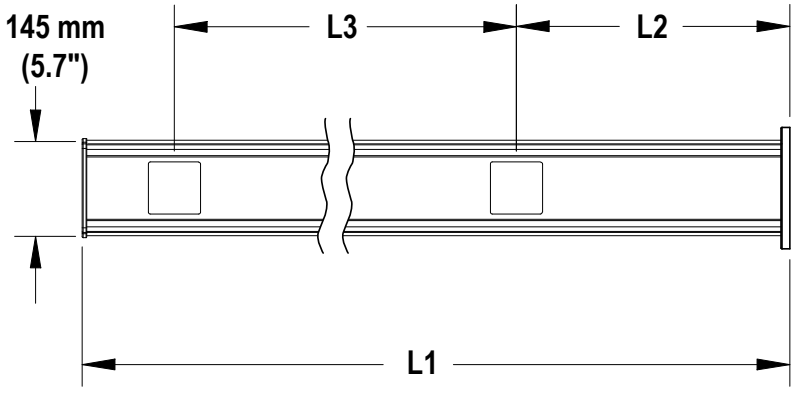

Figure 1. SGSA-S enclosure dimensions

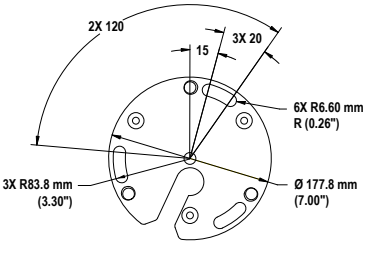

Figure 2. Base dimensions

ПРОМЭЛЕКТРОНИКА/ sales@prom-elec.com

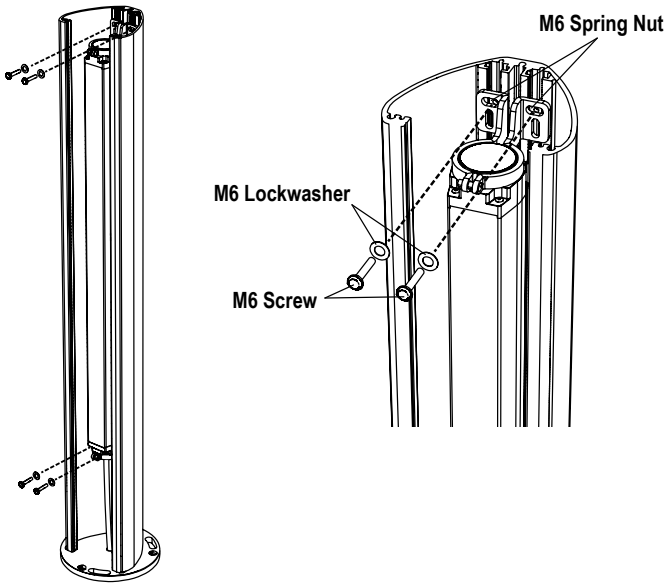

Figure 3. Installation of an SGS Grid System into the SGSA-S enclosure

1. Remove the front panel and top plate.
2. Position the SGS Grid with the mounting brackets over the spring nuts (supplied).
3. Fasten the sensors with the M6 lock washers and screws in four places.
4. Adjust the position of the sensor so that the bottom beam (between end of housing and status indicators) is the proper height above the floor (see the figure for the proper distance).
5. Reinstall the top plate and front panel.

Banner Engineering Corp. Limited Warranty

Banner Engineering Corp. warrants its products to be free from defects in material and workmanship for one year following the date of shipment. Banner Engineering Corp. will repair or replace, free of charge, any product of its manufacture which, at the time it is returned to the factory, is found to have been defective during the warranty period. This warranty does not cover damage or liability for misuse, abuse, or the improper application or installation of the Banner product.

THIS LIMITED WARRANTY IS EXCLUSIVE AND IN LIEU OF ALL OTHER WARRANTIES WHETHER EXPRESS OR IMPLIED (INCLUDING, WITHOUT LIMITATION, ANY WARRANTY OF MERCHANTABILITY OR FITNESS FOR A PARTICULAR PURPOSE), AND WHETHER ARISING UNDER COURSE OF PERFORMANCE, COURSE OF DEALING OR TRADE USAGE.

This Warranty is exclusive and limited to repair or, at the discretion of Banner Engineering Corp., replacement. **IN NO EVENT SHALL BANNER ENGINEERING CORP. BE LIABLE TO BUYER OR ANY OTHER PERSON OR ENTITY FOR ANY EXTRA COSTS, EXPENSES, LOSSES, LOSS OF PROFITS, OR ANY INCIDENTAL, CONSEQUENTIAL OR SPECIAL DAMAGES RESULTING FROM ANY PRODUCT DEFECT OR FROM THE USE OR INABILITY TO USE THE PRODUCT, WHETHER ARISING IN CONTRACT OR WARRANTY, STATUTE, TORT, STRICT LIABILITY, NEGLIGENCE, OR OTHERWISE.**

Banner Engineering Corp. reserves the right to change, modify or improve the design of the product without assuming any obligations or liabilities relating to any product previously manufactured by Banner Engineering Corp. Any misuse, abuse, or improper application or installation of this product or use of the product for personal protection applications when the product is identified as not intended for such purposes will void the product warranty. Any modifications to this product without prior express approval by Banner Engineering Corp will void the product warranties. All specifications published in this document are subject to change; Banner reserves the right to modify product specifications or update documentation at any time. Specifications and product information in English supersede that which is provided in any other language. For the most recent version of any documentation, refer to: *www.bannerengineering.com*.

For patent information, see *www.bannerengineering.com/patents*.

© Banner Engineering Corp. All rights reserved