QS30ELVC Series Clear Object Retroreflective Sensor

Original Instructions
p/n: 139760 Rev. D
19-Aug-25
© Banner Engineering Corp. All rights reserved. www.bannerengineering.com

ПРОМЭЛЕКТРОНИКА/ sales@prom-elec.com

Contents

Chapter 1 Features 3
Models 3
Overview 3
Applications 5
Specifications 5
FCC Part 15 Class A for Unintentional Radiators 6
Industry Canada ICES-003(A) 6
Dimensions 7

Chapter 2 Wiring 8

Chapter 3 Configuration Instructions 9
Perform a Single-Point Light Set 9
Configure the Sensor Using Setup Mode 9
Selecting the Switchpoint 10
Push Button Disable 10
Alarm State 10
Remote Line TEACH 11

Chapter 4 Accessories 13

Chapter 5 Product Support and Maintenance 15
Repairs 15
Contact Us 15
Banner Engineering Corp Limited Warranty 15

© Banner Engineering Corp. All rights reserved. www.bannerengineering.com

Chapter Contents

Models 3
Overview 3
Applications 5
Specifications 5

Chapter 1 Features



- Reliable detection of clear, translucent, or opaque targets — including mirror-like surfaces
- Automatic compensation algorithm compensates for dust or contamination on the sensor or reflector and for ambient temperature changes
- Three selectable thresholds based on type of target being detected
- Easy configuration via push buttons or remote wire
- Easy-to-read operating status indicators
- Rugged housing for harsh environments; rated IP67
- Compact housing, mounting versatility — 30 mm threaded barrel or side-mount

WARNING:

- **Do not use this device for personnel protection**
- Using this device for personnel protection could result in serious injury or death.
- This device does not include the self-checking redundant circuitry necessary to allow its use in personnel safety applications. A device failure or malfunction can cause either an energized (on) or de-energized (off) output condition.

Models

Model	Sensing Range and Use[1]	Cable	Supply Voltage	Output
QS30ELVC	100 mm to 2 m (3.9 in to 78 in); Light SET for clear object detection	2 m (6.5 ft) unterminated 5-wire PVC-jacketed cable	10 V DC to 30 V DC	Bipolar (NPN and PNP)
QS30ELVCQ		Integral 5-pin M12 male quick-disconnect connector		

To order a model with a 9 m (30 ft) cable, add the suffix **W/30** to the model number (for example, **QS30ELVC W/30**).

To order a model with a 150 mm (6 in) cable with a 5-pin M12 connector, add the suffix **Q5** to the model number (for example, **QS30ELVCQ5**).

To order a model with a 150 mm (6 in) PUR cable with a 5-pin M12 connector, add the suffix **QPMA** to the model number (for example, **QS30ELVCQPMA**).

Models with an M12 connector require a mating cordset (see "QS30ELVC Accessories" on page 13).

Overview

The QS30ELVC is an easy-to-use, high-performance retroreflective sensor optimized for the detection of clear, translucent, or opaque objects. The sensor's optical design ensures reliable detection of PET bottles, glass containers, and optically engineered surfaces such as mirrors, LCD glass with polarizing films, or semiconductor wafers. The sensor will not be tricked by specular reflections from the object under normal operating conditions.

[1] Operation at shorter and longer distances possible. Contact factory for applications assistance.

© Banner Engineering Corp. All rights reserved.
www.bannerengineering.com

The compact housing has a large, easy-to-see bar graph display for easy configuration and status monitoring during operation. The sensor housing can be side-mounted using integral mounting holes or front-mounted using the 30 mm threaded barrel. A wide assortment of mounting brackets are also available for applications requiring adjustability or robust mechanical protection.

The QS30ELVC is configured for operation using the Light SET procedure. The sensor is simply aligned to the included retroreflective target and the Light SET is initiated either via the push button or the remote wire input. A reliable detection is assured when the appropriate threshold for clear, translucent or dark object is selected.

Continued reliable operation is maintained as the thresholds adapt to changing signal levels over time using Banner Engineering's auto compensation tracking algorithm. The sensor tracks the amount of light returned at every opportunity and makes fine adjustments to the switching threshold as required because of dust or contamination in the environment building up on the lens window or reflector. If the retroreflector is cleaned, returning the light to its original level, the sensor quickly adapts and continues operating without requiring another Light SET procedure.

The sensor can recover from a cold power-up by reusing the stored threshold values from the last Light SET procedure. You only need to perform the Light SET procedure if the sensor is moved or the sensor-to-reflector separation distance is changed.

The sensor ships from the factory as a DARK OPERATE (DO), non-polarized retroreflective sensor with auto compensation enabled for easy set-up and reliable operation. The automatic compensation tracking algorithm can be disabled if required through the user SETUP buttons or the remote teach wire.

QS30ELVC features



The sensor's compact housing has a large, easy-to-see bar graph display plus bright LEDs for easy configuration and status monitoring during operation. Sensor power and output state are indicated by the green and amber LEDs located at the top of the sensor. Sensor configuration is indicated by the five-segment amber display. Signal strength relative to the switchpoint is indicated by the three-segment red Signal bar graph.

Indicators

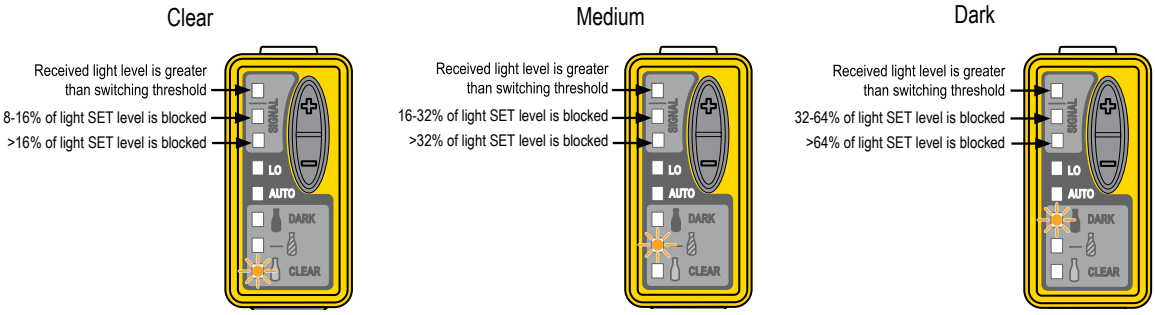

In light operate (LO) mode, the output is ON when the target returns the same or more light to the sensor and OFF when the sensor detects less light than the configured/taught target. In dark operate (DO) mode, the output is ON when the target returns less light to the sensor than the configured target and OFF when the sensor detects more light than the configured/

© Banner Engineering Corp. All rights reserved.
www.bannerengineering.com

taught target. In **retroreflective** sensing modes, light operate means the output is on when the beam is unblocked and dark operate means the output is on when the beam is blocked.

Applications

Clear bottle or object detection

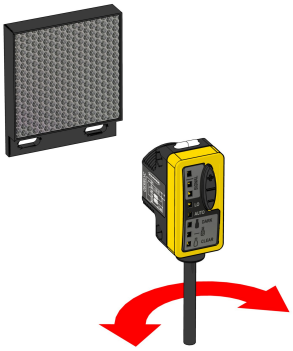

Clear Bottle or Object Detection

1. Mount the retroreflector.
2. Align the sensor to the retroreflector.
3. Perform Light SET with no object present (see "Perform a Single-Point Light Set" on page 9).
4. Using Switchpoint Adjustment ("Selecting the Switchpoint" on page 10), select the darkest switchpoint that reliably detects the object. Medium level (16% below the signal from the retroreflector) works for most applications. Dark level provides more robust detection under difficult environmental conditions (e.g. dust, vibration, etc).

Clear bottle or object counting

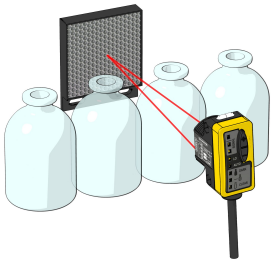

Clear Bottle or Object Counting

1. Mount the retroreflector.
2. Align the sensor to the retroreflector.
3. Disable the auto compensation function. Allow for 10-minute sensor warm-up period.
4. Position the bottles or objects so the beam passes through the gap between the bottles.
5. Perform Light SET on the gap condition (see "Perform a Single-Point Light Set" on page 9).
6. Using Switchpoint Adjustment ("Selecting the Switchpoint" on page 10), select the darkest switchpoint that reliably detects the object. Medium level (16% below the signal from the retroreflector) works for most applications. Dark level may provide more robust detection under difficult environmental conditions (e.g. dust, vibration, etc).

Reflective object detection

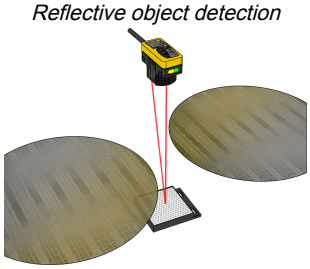

Reflective Object Detection

1. Mount the retroreflector.
2. Align the sensor to the retroreflector.
3. Perform Light SET with no object present (see "Perform a Single-Point Light Set" on page 9).
4. Using Switchpoint Adjustment ("Selecting the Switchpoint" on page 10), select clear or medium switchpoint percentage (8% or 16% below the signal from the retroreflector). This reduces the chance of specular reflection affecting the sensor.

Specifications

Supply Voltage
10 V DC to 30 V DC (10% maximum ripple) at 25 mA maximum current, exclusive of load

Supply Protection Circuitry
Protected against reverse polarity, overvoltage, and transient voltages

Output Protection
Protected against output short-circuit, continuous overload, transient overvoltages, and false pulse on power up

Delay at Power-Up
250 ms; outputs do not conduct during this time

Sensing Beam
660 nm visible red LED

Sensing Range and Use
100 mm to 2 m (3.9" to 78"); Light SET for clear object detection

© Banner Engineering Corp. All rights reserved.
www.bannerengineering.com

Output Configuration

Bipolar: 1 current sourcing (PNP) and 1 current sinking (NPN)

Output Ratings

150 mA maximum load; see Application Note 1

OFF-state leakage current: < 50 µA at 30 V DC

ON-state saturation voltage:

NPN: < 200 mV at 10 mA; < 1 V at 150 mA
PNP: < 1.25V at 10 mA; < 2 V at 150 mA

Output Response Time

500 microseconds

Repeatability

150 microseconds

Indicators

Green LED: Power ON and feedback on configuration and remote wire pulses

Amber LED: Output conducting or error condition (flashing)

Three-Segment Red Signal Bargraph: Signal strength (excess gain), relative to switchpoint

Five-Segment Amber Display: Sensor Configuration

Adjustments

Two push buttons and a remote wire

Easy push-button configuration and deterministic remote wire configuration

Select from three standard thresholds based on the object being detected

Light Operate/Dark Operate configuration options are selectable via push buttons or remote wire

Push-button lockout (from remote wire only)

Construction

ABS plastic housing; acrylic lens cover

Environmental Rating

IP67

Connections

5-wire 2 m (6.5 ft) PVC cable, 5-wire 9 m (30 ft) PVC cable, 150 mm (6 in) cable with a 5-pin M12 quick disconnect connector, 150 mm (6 in) PUR cable with 5-pin M12 quick disconnect connector, or a 5-pin integral M12 quick-disconnect connector, depending on the model ordered

Operating Conditions

–10 °C to +55 °C (+14 °F to +131 °F)

95% at +50 °C maximum relative humidity (non-condensing)

Vibration and Mechanical Shock

Meets IEC 60068-2-6 requirements (Vibration: 10 Hz to 55 Hz, 0.5 mm amplitude, 5 minutes sweep, 30 minutes dwell)

Meets IEC 60068-2-27 requirements (Shock: 15G 11 ms duration, half sine wave)

Application Notes

If the supply voltage is > 24 V DC, derate maximum output current 1 mA/°C above 25 °C

Certifications

Banner Engineering BV
Park Lane, Culliganlaan 2F bus 3
1831 Diegem, BELGIUM

Turck Banner LTD Blenheim House
Blenheim Court
Wickford, Essex SS11 8YT
GREAT BRITAIN

Required Overcurrent Protection

WARNING: Electrical connections must be made by qualified personnel in accordance with local and national electrical codes and regulations.

Overcurrent protection is required to be provided by end product application per the supplied table.

Overcurrent protection may be provided with external fusing or via Current Limiting, Class 2 Power Supply.

Supply wiring leads < 24 AWG shall not be spliced.

For additional product support, go to www.bannerengineering.com.

Supply Wiring (AWG)	Required Overcurrent Protection (A)	Supply Wiring (AWG)	Required Overcurrent Protection (A)
20	5.0	26	1.0
22	3.0	28	0.8
24	2.0	30	0.5

FCC Part 15 Class A for Unintentional Radiators

This equipment has been tested and found to comply with the limits for a Class A digital device, pursuant to Part 15 of the FCC Rules. These limits are designed to provide reasonable protection against harmful interference when the equipment is operated in a commercial environment. This equipment generates, uses, and can radiate radio frequency energy and, if not installed and used in accordance with the instruction manual, may cause harmful interference to radio communications. Operation of this equipment in a residential area is likely to cause harmful interference in which case the user will be required to correct the interference at his own expense.

(Part 15.21) Any changes or modifications not expressly approved by the party responsible for compliance could void the user's authority to operate this equipment.

Industry Canada ICES-003(A)

This device complies with CAN ICES-3 (A)/NMB-3(A). Operation is subject to the following two conditions: 1) This device may not cause harmful interference; and 2) This device must accept any interference received, including interference that may cause undesired operation.

Cet appareil est conforme à la norme NMB-3(A). Le fonctionnement est soumis aux deux conditions suivantes : (1) ce dispositif ne peut pas occasionner d'interférences, et (2) il doit tolérer toute interférence, y compris celles susceptibles de provoquer un fonctionnement non souhaité du dispositif.

© Banner Engineering Corp. All rights reserved.
www.bannerengineering.com

Dimensions

All measurements are listed in millimeters [inches], unless noted otherwise. The measurements provided are subject to change.

Dimensions for the cabled and QD models

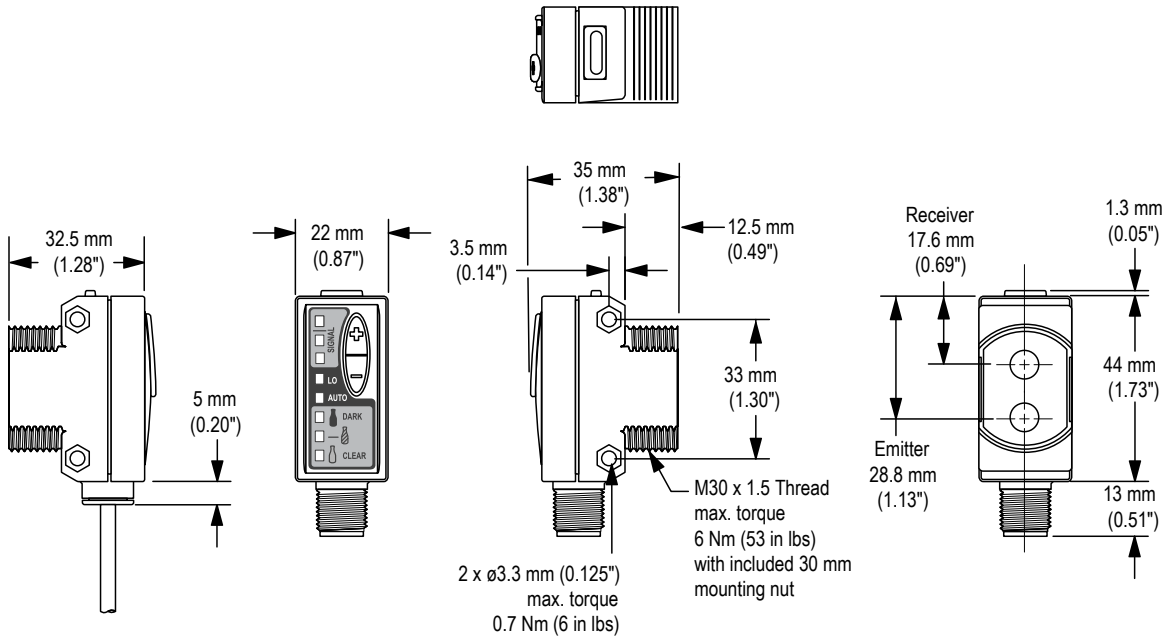

Hardware Included: (10) M3 × 0.5 × 28 stainless steel machine screws, nuts, and washers

© Banner Engineering Corp. All rights reserved.
www.bannerengineering.com

Chapter Contents

Chapter 2 Wiring

Cabled models

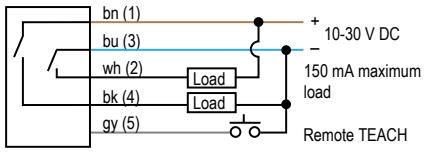

M12 models

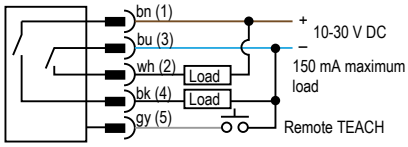

5-pin M12 male pinout

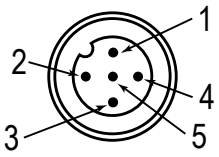

© Banner Engineering Corp. All rights reserved.
www.bannerengineering.com

Chapter Contents

Perform a Single-Point Light Set 9
Configure the Sensor Using Setup Mode 9
Selecting the Switchpoint 10
Push Button Disable 10
Alarm State 10
Remote Line TEACH 11

Chapter 3 Configuration Instructions

Perform a Single-Point Light Set

A single-point light set is useful for clear object detection and other applications with small variations in contrast. Use this procedure to set a switchpoint at 8 (clear), 16 (medium) or 32 (dark) percent below the signal from the retroreflector.

Select the switchpoint position using the **+** and **-** buttons. Select 8, 16, or 32 percent (Switchpoint Selection).

The sensor must be aimed at the reflector during the Set process. All conditions darker than the switchpoint condition result in an ON output (Dark Operate). Output ON and OFF conditions can be reversed by changing Light/Dark Operate in Setup mode. The factory default setting is Dark Operate.

The duration of each button click or remote input pulse is defined as T, where T is: 0.04 s < T < 0.8 s.

Low-contract Set (Dark Operate) shown.

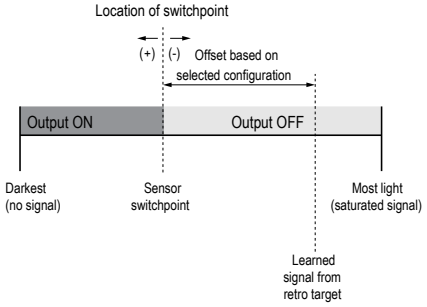

1. Align the sensor to the reflector.
2. Set the switchpoint.
    - Push buttons: Press and hold **+** for more than 2 seconds.
    - Remote: Single-pulse the remote line.

   The green power LED is off, the amber output LED is on, and the bargraph's two top signal LEDs flash alternately.

If the switchpoint was accepted: the green power LED is on, the amber output LED is on for light operate or off for dark operate, and the bargraph's appropriate LEDs are ON. The sensor returns to RUN mode with new settings.

If the switchpoint was not accepted: the green power LED is on, the amber output LED is flashing (alarm state), and the bargraph is off.

Configure the Sensor Using Setup Mode

Use Setup Mode to change sensor configuration:

- Light or Dark operate
- Enable or disable automatic compensation algorithm

If Setup Mode programming is interrupted and remains inactive for 60 seconds, the sensor returns to Run mode with the most recent settings (for example, exits and saves the current selection). Setup Mode operates in the background while the outputs are active; changes are updated instantly.

© Banner Engineering Corp. All rights reserved.
www.bannerengineering.com

The sensor can be configured using the remote line (see).

The duration of each button click or remote input pulse is defined as T, where T is: 0.04 s < T < 0.8 s.

1. To access Setup Mode, press and hold both push buttons > 2 seconds.

   The green Power LED is off, the amber Output LED remains active, and the bargraph status indicators (LO and AUTO) flashes the current configuration.
2. To select the setting combination, click either push button until the LEDs show the desired settings.

   The sensor rotates through four setting combinations, in the following order:

Setting Combination	AUTO LED	LO LED
Auto Compensation ON/DO (factory default)	On	Off
Auto Compensation ON/LO	On	On
Auto Compensation OFF/LO	Off	On
Auto Compensation OFF/DO	Off	Off

3. Press and hold both push buttons > 2 seconds to return to Run Mode with your new settings.

   The green Power LED is on, the amber Output LED remains active, and the bargraph indicates the current configuration. The sensor returns to Run Mode with the new settings.

Selecting the Switchpoint

The switchpoint can be selected during Run Mode using either the push buttons or the remote wire.

Select the switchpoint using the **+** and **-** push buttons. There are three possible choices: 8, 16, or 32 percent below the signal from the retroreflector. The selection does not wrap around, so use both the + and - buttons to select your value.

The sensor continues operating normally with the newly selected threshold value. It is not necessary to repeat the light set procedure.

Push Button Disable

In addition to its configuration function, the remote wire may be used to disable the push buttons for security. Disabling the push buttons prevents accidental or unauthorized adjustment of the sensor settings. Connect the sensor's gray wire as described in , and four-pulse to either enable or disable the push buttons: 

Alarm State

The QS30ELVC Alarm State indicates that the sensor requires attention. In all situations, clear the alarm by realigning the sensor to the retroreflector, cleaning the sensor or retroreflector of contamination, and performing a Light SET to establish a valid light signal.

Alarm State is indicated by:

- Amber Output LED is flashing
- All three red Signal LEDs are off
- Output forced to blocked state (for example, if the sensor is in dark operate (DO), the output is conducting)

The sensor may enter Alarm State for three reasons:

1. The sensor may be in Alarm State when first powered up. This is normal operation and does not indicate a problem with the sensor. The Alarm State will be cleared when a valid Light SET is performed.
2. The sensor enters Alarm State if the Light SET procedure fails. This indicates the sensor did not receive enough light from the retroreflector for reliable detection. Realign the sensor to the retroreflector, making sure all optical surfaces are free of contamination. If the automatic compensation algorithm is enabled, the sensor may recover at this point and begin operating normally. It is not necessary to repeat the Light SET procedure. If automatic compensation has been disabled, the sensor remains in the Alarm State until the alignment has been corrected and a Light SET is successfully completed.
3. The sensor can enter Alarm State if the auto compensation algorithm is enabled and the sensor has automatically adjusted the threshold as much as possible. The sensor and retroreflector should be cleaned or the sensor should be

© Banner Engineering Corp. All rights reserved.
www.bannerengineering.com

realigned to the retroreflector. The sensor will automatically adapt to the new light level, or a Light SET can be performed to reestablish the light level.

In any case, the sensor can be returned to normal operation by ensuring a clean optical path, aligning the sensor to the retroreflector, and performing a Light SET procedure on the sensor.

Remote Line TEACH

Connect the gray wire of the sensor to ground (0 V DC), with a remote programming switch connected between them.

Run Mode is the sensor's normal operating condition.

The duration of each button click or remote input pulse is defined as T, where T is: 0.04 s < T < 0.8 s.

A Hold exits TEACH Mode and returns to Run Mode with the previously saved changes. The duration of a Hold is: T > 2 s. A Timeout occurs if a condition is not registered within 60 seconds, causing the sensor to return to Run Mode (during sensor configuration only). Sensor configuration user feedback is shown on the green LED. See the flowchart below.

© Banner Engineering Corp. All rights reserved.

Remote line TEACH flowchart

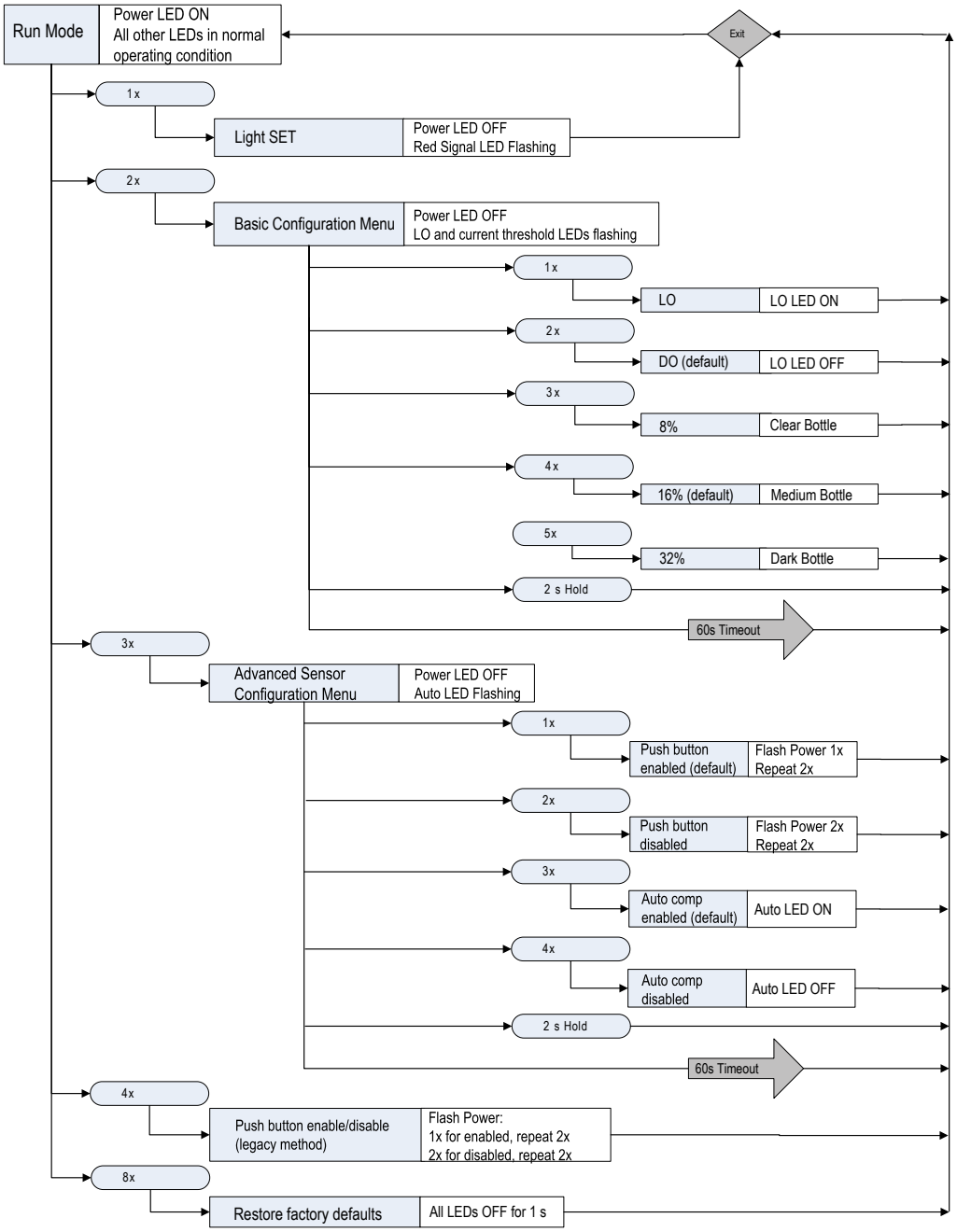

© Banner Engineering Corp. All rights reserved.
www.bannerengineering.com

Chapter Contents

Chapter 4 Accessories

5-pin Single-Ended M12 Female Cordsets				
Model	**Length**	**Dimensions (mm)**	**Pinout (Female)**	
BC-M12F5-22-1	1 m (3.28 ft)	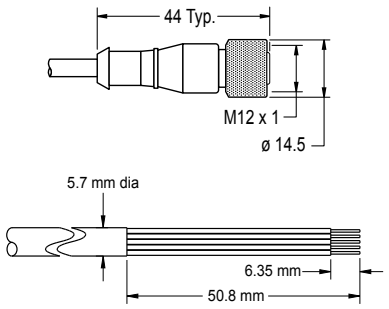	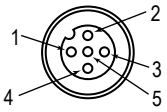	1 = Brown 2 = White 3 = Blue 4 = Black 5 = Gray
BC-M12F5-22-2	2 m (6.56 ft)			
BC-M12F5-22-5	5 m (16.4 ft)			
BC-M12F5-22-8	8 m (26.25 ft)			
BC-M12F5-22-10	10 m (30.81 ft)			
BC-M12F5-22-15	15 m (49.2 ft)			

5-pin Single-Ended M12 Female Right-Angle Cordsets				
Model	**Length**	**Dimensions (mm)**	**Pinout (Female)**	
BC-M12F5A-22-1	1 m (3.28 ft)	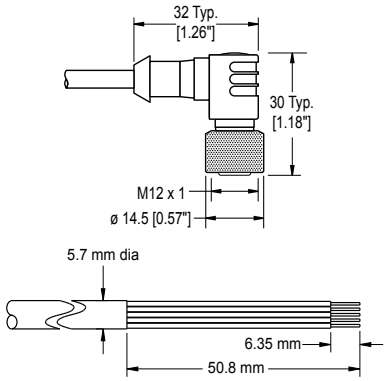	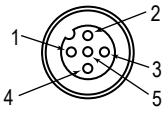	1 = Brown 2 = White 3 = Blue 4 = Black 5 = Gray
BC-M12F5A-22-2	2 m (6.56 ft)			
BC-M12F5A-22-5	5 m (16.4 ft)			
BC-M12F5A-22-8	8 m (26.25 ft)			
BC-M12F5A-22-10	10 m (30.81 ft)			
BC-M12F5A-22-15	15 m (49.2 ft)			

SMBQS30L

- Right-angle bracket for cable sensor models
- Clearance for M4 (#8) hardware
- ± 12° tilt adjustment
- 14-gauge stainless steel

Hole center spacing: A to B=35.0
Hole size: A=ø 4.3, B=ø 4.25×16.3



SMBQS30LT

- Tall right-angle bracket for QD models
- ± 8° tilt adjustment
- 14-gauge stainless steel

Hole center spacing: A to B=35.0
Hole size: A=ø 4.3, B=ø 4.25×16.3



© Banner Engineering Corp. All rights reserved.
www.bannerengineering.com

SMBQS30Y

- Heavy-duty die-cast bracket
- M18 vertical mount option
- ± 8° tilt adjustment with cabled units
- Includes nuts and lock washer

Hole size: A=ø 15.3



SMB30SC

- Swivel bracket with 30 mm mounting hole for sensor
- Black reinforced thermoplastic polyester
- Stainless steel mounting and swivel locking hardware included

Hole center spacing: A=ø 50.8
Hole size: A=ø 7.0, B=ø 30.0

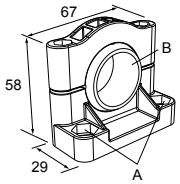

Other compatible mounting brackets include:

- SMB30MM
- SMB30A
- SMB30FA

Banner offers a wide selection of high-quality retroreflective targets. QS30ELVC sensors require corner cube type, large facet retroreflective targets only. Microprism and flexible tape reflectors are not recommended.

BRT-2X2LVC

- Square, acrylic target
- Reflectivity Factor: 1.0
- Temperature:
- Optional brackets are available
- Approximate size: 51 mm × 51 mm

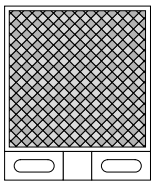

BRT-40X19A

- Rectangular, acrylic target
- Reflectivity Factor: 1.3
- Temperature:
- Approximate size: 19 mm × 60 mm overall; 19 mm × 40 mm reflector

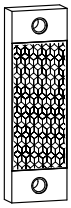

BRT-92X92C

- Square, acrylic target
- Reflectivity Factor: 3.0
- Temperature:
- Optional brackets are available
- Approximate size: 92 mm × 92 mm



Reflectivity factors are when compared with the standard BRT-3 reflector.

© Banner Engineering Corp. All rights reserved.
www.bannerengineering.com

Chapter Contents

Repairs 15
Contact Us 15
Banner Engineering Corp Limited Warranty 15

Chapter 5 Product Support and Maintenance

Repairs

Contact Banner Engineering for troubleshooting of this device. **Do not attempt any repairs to this Banner device; it contains no field-replaceable parts or components.** If the device, device part, or device component is determined to be defective by a Banner Applications Engineer, they will advise you of Banner's RMA (Return Merchandise Authorization) procedure.

> **IMPORTANT:** If instructed to return the device, pack it with care. Damage that occurs in return shipping is not covered by warranty.

Contact Us

Banner Engineering Corp. | 9714 Tenth Avenue North | Plymouth, MN 55441, USA | Phone: + 1 888 373 6767

For worldwide locations and local representatives, visit www.bannerengineering.com.

Banner Engineering Corp Limited Warranty

Banner Engineering Corp. warrants its products to be free from defects in material and workmanship for one year following the date of shipment. Banner Engineering Corp. will repair or replace, free of charge, any product of its manufacture which, at the time it is returned to the factory, is found to have been defective during the warranty period. This warranty does not cover damage or liability for misuse, abuse, or the improper application or installation of the Banner product.

THIS LIMITED WARRANTY IS EXCLUSIVE AND IN LIEU OF ALL OTHER WARRANTIES WHETHER EXPRESS OR IMPLIED (INCLUDING, WITHOUT LIMITATION, ANY WARRANTY OF MERCHANTABILITY OR FITNESS FOR A PARTICULAR PURPOSE), AND WHETHER ARISING UNDER COURSE OF PERFORMANCE, COURSE OF DEALING OR TRADE USAGE.

This Warranty is exclusive and limited to repair or, at the discretion of Banner Engineering Corp., replacement. **IN NO EVENT SHALL BANNER ENGINEERING CORP. BE LIABLE TO BUYER OR ANY OTHER PERSON OR ENTITY FOR ANY EXTRA COSTS, EXPENSES, LOSSES, LOSS OF PROFITS, OR ANY INCIDENTAL, CONSEQUENTIAL OR SPECIAL DAMAGES RESULTING FROM ANY PRODUCT DEFECT OR FROM THE USE OR INABILITY TO USE THE PRODUCT, WHETHER ARISING IN CONTRACT OR WARRANTY, STATUTE, TORT, STRICT LIABILITY, NEGLIGENCE, OR OTHERWISE.**

Banner Engineering Corp. reserves the right to change, modify or improve the design of the product without assuming any obligations or liabilities relating to any product previously manufactured by Banner Engineering Corp. Any misuse, abuse, or improper application or installation of this product or use of the product for personal protection applications when the product is identified as not intended for such purposes will void the product warranty. Any modifications to this product without prior express approval by Banner Engineering Corp will void the product warranties. All specifications published in this document are subject to change; Banner reserves the right to modify product specifications or update documentation at any time. Specifications and product information in English supersede that which is provided in any other language. For the most recent version of any documentation, refer to: www.bannerengineering.com.

For patent information, see www.bannerengineering.com/patents.

© Banner Engineering Corp. All rights reserved.
www.bannerengineering.com

LinkedIn

X (formerly Twitter)

Facebook



© 2025. All rights reserved.
www.bannerengineering.com