EZ-SCREEN LS Safety Light Curtain Product Manual

Original Instructions
p/n: 179480 Rev. M Conditions:
05-Feb-25
© Banner Engineering Corp. All rights reserved. www.bannerengineering.com

ПРОМЭЛЕКТРОНИКА/ sales@prom-elec.com

Contents

Chapter 1 About This Document 5
1.1 Important... Read This Before Proceeding! 5
1.2 Use of Warnings and Cautions 5
1.3 EU/UK Declaration of Conformity (DoC) 6

Chapter 2 Standards and Regulations 7
2.1 Applicable US Standards 7
2.2 Applicable OSHA Regulations 8
2.3 International/European Standards 8

Chapter 3 Product Overview 9
3.1 Appropriate Applications and Limitations 10
3.1.1 Appropriate Applications 11
3.1.2 Examples: Inappropriate Applications 11
3.1.3 Control Reliability: Redundancy and Self-Checking 11
3.2 Components 12
3.2.1 EZ-SCREEN LS Models 12
3.2.2 Ordering Guide 14
3.2.3 Models 16
3.3 Operating Features 20
3.3.1 Trip Output 20
3.3.2 External Device Monitoring (EDM) 20
3.3.3 Fault Output 21
3.3.4 Scan Code Configuration 21
3.3.5 Wiring Options 21
3.3.6 Cascading 21
3.3.7 EZ-LIGHT® Indication 21
3.3.8 Interfacing an E-Stop Button or Interlocking Switch 22
3.3.9 Remote Fixed Blanking 22
3.3.10 Status Indicators 23

Chapter 4 Specifications 24
4.1 General Specifications 24
4.2 Receiver Specifications 25
4.3 Emitter Specifications 25
4.4 Dimensions 26

Chapter 5 Mechanical Installation 28
5.1 Mechanical Installation Considerations 28
5.1.1 Calculating the Safety Distance (Minimum Distance) 28
5.1.2 Reducing or Eliminating Pass-Through Hazards 31
5.1.3 Supplemental Safeguarding 31
5.1.4 Reset Switch Location 32
5.1.5 Adjacent Reflective Surfaces 33
5.1.6 Use of Corner Mirrors 35
5.1.7 Emitter and Receiver Orientation 36
5.1.8 Installation of Multiple Systems 37
5.2 Mounting System Components 38
5.2.1 Mounting Hardware 38
5.2.2 Mounting the End-Mount Brackets 39
5.2.3 Mounting the Center- and Side-Mount Brackets 40
5.2.4 Optional EZLSA-MBK-16 Side-Mount Bracket 41
5.2.5 Sensor Mounting and Mechanical Alignment 41
5.2.6 Mounting Dimensions 43

Chapter 6 Electrical Installation and Testing 45
6.1 Routing Cordsets 45
6.2 Initial Electrical Connections 46
6.3 Initial Checkout Procedure 47
6.3.1 Configuring the System for Initial Checkout 47
6.3.2 Initial Power-Up 47
6.3.3 Optical Alignment 48
6.3.4 Optical Alignment Procedure with Mirrors 49
3.3.9 Remote Fixed Blanking 22

© Banner Engineering Corp. All rights reserved. www.bannerengineering.com

6.3.6 Perform a Trip Test ... 52
6.4 Electrical Connections to the Guarded Machine ... 53
6.4.1 OSSD Output Connections ... 54
6.4.2 Final Switching Devices (FSD) Interfacing Connections ... 54
6.4.3 Machine Primary Control Elements and EDM Input ... 55
6.4.4 External Device Monitoring ... 56
3.3.3 Fault Output ... 21
6.4.6 Scan Code Select ... 57
6.4.7 Preparing for System Operation ... 57
6.4.8 Sensor Interchangeability ... 57
6.5 Wiring Diagrams ... 58
6.5.1 Reference Wiring Diagrams ... 58
6.5.2 Generic Wiring Diagram—5-pin and 8-pin Emitter ... 58
6.5.3 Generic Wiring Diagram—5-pin Receiver and UM-FA-..A Safety Module ... 59
6.5.4 Generic Wiring Diagram—5-pin Receiver and Safety Module/Controller or Safety PLC/PES ... 61
6.5.5 Generic Wiring Diagram—8-pin Receiver and Redundant FSDs ... 62
6.5.6 Generic Wiring Diagram—8-pin Receiver and IM-T-9A Interface Module ... 63
6.5.7 Generic Wiring Diagram—8-pin Receiver and a Smart Device ... 64

Chapter 7 System Operation ... 65
7.1 Security Protocol ... 65
7.2 Status Indicators ... 65
7.2.1 Emitter ... 65
7.2.2 Receiver ... 65
7.2.3 Receiver Status Indicator Operation - Trip Output ... 66
7.2.4 Status Indicators for Cascaded Applications ... 66
7.3 Normal Operation ... 67
7.3.1 System Power-Up ... 67
7.3.2 Run Mode ... 67
7.4 Periodic Checkout Requirements ... 67

Chapter 8 Checkout Procedures ... 69
8.1 Schedule of Checkouts ... 69
8.2 Commissioning Checkout ... 69

Chapter 9 Troubleshooting ... 72
9.1 Lockout Conditions ... 72
9.2 Recovery Procedures ... 72
9.2.1 Receiver Error Codes ... 73
9.2.2 Emitter Error Codes ... 75
9.3 Electrical and Optical Noise ... 75
9.3.1 Check for Sources of Electrical Noise ... 75
9.3.2 Check for Sources of Optical Noise ... 75

Chapter 10 Cascade ... 76
10.1 Overview of Cascading ... 76
10.1.1 System Components and Specifications ... 77
10.1.2 Receiver Display ... 77
10.2 Determining Interconnect Cordset Lengths ... 78
10.3 Response Time for Cascaded Light Screens ... 79
10.3.1 Determining System Response Time ... 80
10.3.2 Individual Response Time and Safety (Minimum) Distance ... 80
10.3.3 CSSI Response Time ... 80
10.4 Emergency Stop Buttons in Cascaded Systems ... 81
10.4.1 E-Stop Switch Requirements (Positive-Opening) ... 82
10.5 Interlock Switches in Cascaded Systems ... 83
10.5.1 Interlock Guarding Requirements ... 84
10.5.2 Positive-Opening Interlocking Safety Switches ... 84
10.6 Remote TEACH Fixed Blanking (Wiring) ... 85

Chapter 11 Accessories ... 87
11.1 Cordsets ... 87
11.1.1 Single-Ended (Machine Interface) Cables ... 88
11.1.2 Double-Ended (Sensor Interconnect) Cordsets ... 89
11.1.3 Splitter Cordsets ... 91
11.1.4 Bulkhead Connector ... 92
11.2 AC Interface Boxes ... 92
11.3 Universal (Input) Safety Modules ... 92

© Banner Engineering Corp. All rights reserved. www.bannerengineering.com

11.4 Safety Controllers 93
11.5 Muting Module 93
11.6 Interface Modules 93
11.7 Contactors 93
11.8 Optional Mounting Brackets 94
11.8.1 Installing the Side Mount Brackets 94
11.9 Remote Blanking Key Switch Box 95
11.10 Alignment Aids 96
11.11 Snap-On Lens Shields 96
11.12 Tubular Enclosures 96
11.13 EZ-SCREEN LS Safety Light Curtain in an IP69K Hygienic Housing 97
11.14 EZ-LIGHTS® for EZ-SCREEN® 97
11.15 SSM Series Corner Mirrors 99
11.16 MSA Series Stands 100
11.17 Muting Accessories 101

Chapter 12 Product Support and Maintenance 102
12.1 Replacement Parts 102
12.2 Clean Components with Mild Detergent 102
12.3 Warranty Service 102
12.4 Manufacturing Date 102
12.5 Disposal 103
12.6 Banner Engineering Corp Limited Warranty 103
12.7 Contact Us 103

Index 104

Glossary 105

© Banner Engineering Corp. All rights reserved. www.bannerengineering.com

Chapter Contents

1.1 Important... Read This Before Proceeding! 5
1.2 Use of Warnings and Cautions 5
1.3 EU/UK Declaration of Conformity (DoC) 6

Chapter 1 About This Document

1.1 Important... Read This Before Proceeding!

It is the responsibility of the machine designer, controls engineer, machine builder, machine operator, and/or maintenance personnel or electrician to apply and maintain this device in full compliance with all applicable regulations and standards. The device can provide the required safeguarding function only if it is properly installed, properly operated, and properly maintained. This manual attempts to provide complete installation, operation, and maintenance instructions. *Reading the manual in its entirety is highly recommended to ensure proper understanding of the operation, installation, and maintenance.* Please direct any questions regarding the application or use of the device to Banner Engineering Corp..

For more information regarding U.S. and international institutions that provide safeguarding application and safeguarding device performance standards, see "Standards and Regulations" on page 7.

WARNING:

- The user is responsible for following these instructions.
- **Failure to follow any of these responsibilities may potentially create a dangerous condition that could result in serious injury or death.**
- Carefully read, understand, and comply with all instructions for this device.
- Perform a risk assessment that includes the specific machine guarding application. Guidance on a compliant methodology can be found in ISO 12100 or ANSI B11.0.
- Determine what safeguarding devices and methods are appropriate per the results of the risk assessment and implement per all applicable local, state, and national codes and regulations. See ISO 13849-1, ANSI B11.19, and/or other appropriate standards.
- Verify that the entire safeguarding system (including input devices, control systems, and output devices) is properly configured and installed, operational, and working as intended for the application.
- Periodically re-verify, as needed, that the entire safeguarding system is working as intended for the application.

1.2 Use of Warnings and Cautions

The precautions and statements used throughout this document are indicated by alert symbols and must be followed for the safe use of the EZ-SCREEN LS Safety Light Curtain. Failure to follow all precautions and alerts may result in unsafe use or operation. The following signal words and alert symbols are defined as follows:

Signal Word and Symbol	Definition
WARNING:	**Warnings** refer to potentially hazardous situations which, if not avoided, could result in serious injury or death.
CAUTION:	**Cautions** refer to potentially hazardous situations which, if not avoided, could result in minor or moderate injury.

© Banner Engineering Corp. All rights reserved.
www.bannerengineering.com

These statements are intended to inform the machine designer and manufacturer, the end user, and maintenance personnel, how to avoid misapplication and effectively apply the EZ-SCREEN LS Safety Light Curtain to meet the various safeguarding application requirements. These individuals are responsible to read and abide by these statements.

1.3 EU/UK Declaration of Conformity (DoC)

Banner Engineering Corp. herewith declares that these products are in conformity with the provisions of the listed directives and all essential health and safety requirements have been met. For the complete DoC, please go to www.bannerengineering.com.

Product	Directive
EZ-SCREEN LS Safety Light Curtain	EU: Machinery Directive 2006/42/EC
	UKCA: Machinery (Safety) Regulation 2008

Representative in EU: Spiros Lachandidis, Managing Director, **Banner Engineering BV** Park Lane | Culliganlaan 2F bus 3 | 1831 Diegem, BELGIUM

Representative in UK: Tony Coghlan, Managing Director, **Turck Banner LTD** Blenheim House | Blenheim Court | Wickford, Essex SS11 8YT | Great Britain

© Banner Engineering Corp. All rights reserved.
www.bannerengineering.com

Chapter Contents

2.1 Applicable US Standards 7
2.2 Applicable OSHA Regulations 8
2.3 International/European Standards 8

Chapter 2 Standards and Regulations

The list of standards below is included as a convenience for users of this Banner device. Inclusion of the standards below does not imply that the device complies specifically with any standard, other than those specified in the Specifications section of this manual.

2.1 Applicable US Standards

ANSI B11.0 Safety of Machinery

ANSI B11.1 Mechanical Power Presses

ANSI B11.2 Hydraulic Power Presses

ANSI B11.3 Power Press Brakes

ANSI B11.4 Shears

ANSI B11.5 Iron Workers

ANSI B11.6 Lathes

ANSI B11.7 Cold Headers and Cold Formers

ANSI B11.8 Drilling, Milling, and Boring

ANSI B11.9 Grinding Machines

ANSI B11.10 Metal Sawing Machines

ANSI B11.11 Gear Cutting Machines

ANSI B11.12 Roll Forming and Roll Bending Machines

ANSI B11.13 Single- and Multiple-Spindle Automatic Bar and Chucking Machines

ANSI B11.14 Coil Slitting Machines

ANSI B11.15 Pipe, Tube, and Shape Bending Machines

ANSI B11.16 Metal Powder Compacting Presses

ANSI B11.17 Horizontal Extrusion Presses

ANSI B11.18 Machinery and Machine Systems for the Processing of Coiled Strip, Sheet, and Plate

ANSI B11.19 Performance Requirements for Risk Reduction Measures: Safeguarding and Other Means of Reducing Risk

ANSI B11.20 Manufacturing Systems

ANSI B11.21 Machine Tools Using Lasers

ANSI B11.22 Numerically Controlled Turning Machines

ANSI B11.23 Machining Centers

ANSI B11.24 Transfer Machines

ANSI/RIA R15.06 Safety Requirements for Industrial Robots and Robot Systems

© Banner Engineering Corp. All rights reserved.

NFPA 79 Electrical Standard for Industrial Machinery

ANSI/PMMI B155.1 Package Machinery and Packaging-Related Converting Machinery — Safety Requirements

2.2 Applicable OSHA Regulations

OSHA Documents listed are part of: Code of Federal Regulations Title 29, Parts 1900 to 1910

OSHA 29 CFR 1910.212 General Requirements for (Guarding of) All Machines

OSHA 29 CFR 1910.147 The Control of Hazardous Energy (lockout/tagout)

OSHA 29 CFR 1910.217 (Guarding of) Mechanical Power Presses

2.3 International/European Standards

ISO 12100 Safety of Machinery – General Principles for Design – Risk Assessment and Risk Reduction

ISO 13857 Safety of Machinery – Safety Distances to Prevent Hazard Zones Being Reached

ISO 13850 (EN 418) Emergency Stop Devices, Functional Aspects – Principles for Design

ISO 13851 Two-Hand Control Devices – Principles for Design and Selection

IEC 62061 Safety of Machinery – Functional Safety of Safety-Related Control Systems

ISO 13849-1 Safety of Machinery – Safety-Related Parts of Control Systems – Part 1: General Principles for Design

EN 13855 (EN 999) The Positioning of Protective Equipment in Respect to Approach Speeds of Parts of the Human Body

ISO 14119 (EN 1088) Interlocking Devices Associated with Guards – Principles for Design and Selection

EN 60204-1 Electrical Equipment of Machines Part 1: General Requirements

IEC 61496 Electro-sensitive Protection Equipment

IEC 60529 Degrees of Protection Provided by Enclosures

IEC 60947-1 Low Voltage Switchgear – General Rules

IEC 60947-5-1 Low Voltage Switchgear – Electromechanical Control Circuit Devices

IEC 60947-5-5 Low Voltage Switchgear – Electrical Emergency Stop Device with Mechanical Latching Function

IEC 61508 Functional Safety of Electrical/Electronic/Programmable Electronic Safety-Related Systems

IEC 62046 Safety of Machinery – Applications of Protective Equipment to Detect the Presence of Persons

ISO 3691-4 Industrial Trucks – Safety Requirements and Verification, Part 4 Driverless Industrial trucks and their Systems

© Banner Engineering Corp. All rights reserved.

Chapter Contents

3.1 Appropriate Applications and Limitations 10
3.2 Components 12
3.3 Operating Features 20

Chapter 3 Product Overview

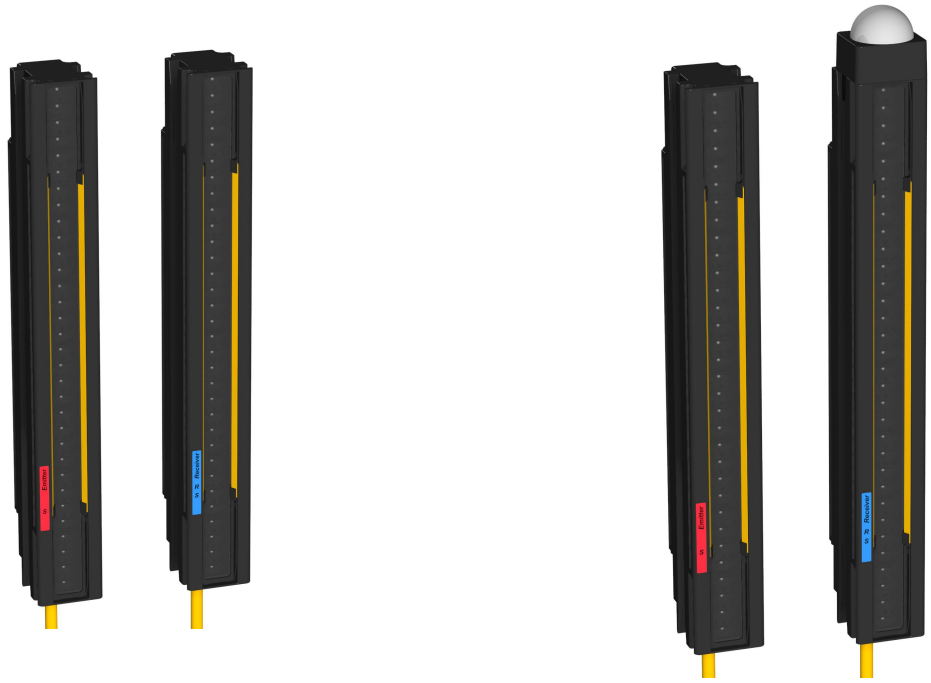

EZ-SCREEN LS Safety Light Curtain shown without and with the optional EZLSA-K30LGR EZ-LIGHT

Banner EZ-SCREEN LS is a two-piece (emitter (light curtain) and receiver (light curtains)), redundant, microprocessor-controlled, opposed-mode optoelectronic light curtain or safety light screen. Models are available in 14 mm, 23 mm, or 40 mm resolution. Up to four pairs of SLLC.. model emitters and receivers can be connected to cascade together.

Emitters have a row of synchronized modulated infrared (invisible) light-emitting diodes (LEDs) in a robust, compact metal housing. Receivers have a corresponding row of synchronized photodetectors. The sensing field created by the emitter and receiver is called the defined area; its width and height are determined by the length of the sensor pair and the distance between them. The sensing range spans:

- 280 mm to 1820 mm length models: 0.1 m to 12 m (4 in to 39 ft)
- 1890 mm to 2380 mm length models: 0.1 m to 10 m (4 in to 32.8 ft)

The range decreases with the use of corner mirrors and/or lens shields:

- Lens shields — approx 10% less range per shield
- Glass-surface mirrors — approx 8% less range per mirror

The length of the sensor pair (housing) is dependent on the model, with lengths available from 280 mm to 2380 mm (11 in to 93.7 in). The end-to-end sensing design of the EZ-SCREEN LS, also known as "no blind zone" and "no dead zone," allows mounting with minimal or no gaps in detection when using EZLSA-MBK-12 center-mount or EZLSA-MBK-16 side-mount brackets.

The EZ-SCREEN LS models have trip output (automatic power-up and automatic reset). In typical operation, if any part of an operator's body (or any opaque object) of more than a pre-determined cross section is detected, the solid-state output signal switching device (OSSD) safety outputs turn Off. These safety outputs are connected to the guarded machine's final switching device (FSDs) that controls the machine primary control element (MPCEs), which immediately stops the motion of the guarded machine. When the defined area becomes clear, the OSSD outputs are allowed to turn ON.

© Banner Engineering Corp. All rights reserved.
www.bannerengineering.com

EZ-SCREEN LS sensors are extensively FMEA (failure mode and effects analysis) tested to establish an extremely high degree of confidence that when properly installed, no system component (even if it should ever fail) can cause a failure to danger. Because of the dual scan technology, EZ-SCREEN LS sensors are also highly immune to EMI, RFI, ambient light, weld flash, and strobe light.

Eight-conductor EZ-SCREEN LS systems (receivers with an 8-pin cabled QD or flying leads) do not require an external controller when using the external device monitoring (EDM) function. This function ensures the fault detection capability required by U.S. Control Reliability and ISO 13849-1 Categories 3 or 4 and PL d or e for controlling final switching devices (FSDs) or machine primary control elements (MPCEs).

When configured with a five-conductor connection, the EZ-SCREEN LS requires a self-checking safety module, safety controller, or safety PLC/PES that conforms to the level of performance required by the risk assessment. Examples include the UM-FA-9A/-11A safety module, SC10-2roe or XS/SC26-2 safety controller for applications requiring Control Reliability and/or ISO 13849-1 Categories 3 or 4 and PL d or e.

Electrical connections (power, ground, inputs and outputs) are made via M12 quick-disconnect cordsets or unique RD (removable disconnect) cordsets, depending on model. A "System" as referred to in this manual, is defined as an emitter and its receiver, plus their cabling, or to a cascade of emitters and their receivers and their cabling.

Available features include selectable scan code via hookup, an auxiliary fault output, a recessed exit window, and robust metal housing and end-caps for industry-leading durability.

Additional features on cascade models include automatic configuration of up to four sensor pairs (any length or resolution), optional EZ-LIGHT indication (integral or remotely located) the ability to interface an E-Stop button or Interlocking switches (hard contacts), and remote fixed blanking. All models require a supply voltage of +24 V DC ±15%.

Both emitter and receiver feature 7-segment Diagnostic Displays and individual LEDs to provide continuous indication of operating status, configuration, and error conditions. An adhesive Diagnostics label is provided that includes a summary of the operational and error codes. Active Alignment (Segment) Indicators provide beam block information and easier installation. See "Status Indicators" on page 65 for more information.

3.1 Appropriate Applications and Limitations

WARNING:

- **Read this Section Carefully Before Installing the System**
- **Failure to follow these instructions could result in serious injury or death.**
- If all mounting, installation, interfacing, and checkout procedures are not followed properly, this Banner Engineering Corp. device cannot provide the protection for which it was designed.
- The user is responsible for ensuring that all local, state, and national laws, rules, codes, or regulations relating to the installation and use of this control system in any particular application are satisfied. Ensure that all legal requirements have been met and that all technical installation and maintenance instructions contained in this manual are followed.
- The user has the sole responsibility to ensure that this Banner Engineering Corp. device is installed and interfaced to the guarded machine by Qualified Persons, in accordance with this manual and applicable safety regulations. A Qualified person is a person who, by possession of a recognized degree or certificate of professional training, or who, by extensive knowledge, training and experience, has successfully demonstrated the ability to solve problems relating to the subject matter and work.

The EZ-SCREEN LS ability to perform its safeguarding function depends upon the appropriateness of the application and upon its proper mechanical and electrical installation and interfacing to the guarded machine. **If all mounting, installation, interfacing, and checkout procedures are not followed properly, the EZ-SCREEN LS cannot provide the protection for which it was designed**.

© Banner Engineering Corp. All rights reserved.
www.bannerengineering.com

WARNING:

- **Install System Only on Appropriate Applications**
- **Failure to follow these instructions could result in serious injury or death.**
- Use Banner's EZ-SCREEN LS only on machinery that can be stopped immediately after a stop signal is issued at any point in the machine's stroke or cycle, such as part-revolution clutch machines. Under no circumstances may the EZ-SCREEN LS be used on full-revolution devices (full-revolution clutched machinery) or in unsuitable applications.
- If there is any doubt about whether or not your machinery is compatible with the EZ-SCREEN LS, contact Banner Engineering.

3.1.1 Appropriate Applications

EZ-SCREEN LS is typically used for, but is not limited to, the following applications:

- Automated production equipment
- Robotic work cells
- Molding and power presses
- Assembly and packaging machines
- Lean manufacturing systems

3.1.2 Examples: Inappropriate Applications

Do not use EZ-SCREEN LS in the following applications:

- With any machine that cannot be stopped immediately after a stop signal is issued, such as single-stroke (or full-revolution devices) clutched machinery
- With any machine with inadequate or inconsistent machine response time and stopping performance
- With any machine that ejects materials or component parts through the defined area
- In any environment that is likely to adversely affect photoelectric sensing efficiency. For example, corrosive chemicals or fluids or unusually severe levels of smoke or dust, if not controlled, may degrade sensing efficiency
- As a tripping device to initiate or reinitiate machine motion (presence-sensing device initiation (PSDI) applications), unless the machine and its control system fully comply with the relevant standard or regulation (see OSHA 29CFR1910.217, NFPA 79, ANSI B11.19, ISO 12100, IEC 60204-1, IEC 61496-1, or other appropriate standard)

If an EZ-SCREEN LS is installed for use as a perimeter guard (where a pass-through hazard may exist, see "Reducing or Eliminating Pass-Through Hazards" on page 31), the dangerous machine motion can be initiated by normal means only after the safeguarded area is clear of individuals and the safety-related part of the control system that is providing the latching function has been manually reset.

3.1.3 Control Reliability: Redundancy and Self-Checking

Redundancy requires that EZ-SCREEN LS circuit components be backed up to the extent that if the failure of a single component will prevent effective machine stopping action when needed, that component must have a redundant counterpart that will perform the same function. The EZ-SCREEN LS is designed with redundant microprocessors for control reliability.

Redundancy must be maintained whenever the EZ-SCREEN LS is in operation. Because a redundant system is no longer redundant after a component has failed, EZ-SCREEN LS is designed to monitor itself continuously. A component failure detected by or within the self-checking system causes a stop signal to be sent to the guarded machine and puts the EZ-SCREEN LS into a lockout condition.

A recovery from this type of lockout condition requires:

- Replacement of the failed component (to restore redundancy)
- The appropriate reset procedure

The Diagnostic Display is used to diagnose the causes of a lockout condition. See "Troubleshooting" on page 72.

© Banner Engineering Corp. All rights reserved.
www.bannerengineering.com

3.2 Components

3.2.1 EZ-SCREEN LS Models

An EZ-SCREEN LS Safety Light Curtain “System” refers to a compatible emitter (light curtain) and receiver (light curtains) of equal length and resolution (available in pairs or separately), including cascaded sensors, and their cordsets. Mounting hardware may be included with each emitter and receiver, depending on model. Special-purpose mounting brackets both for standalone pairs and for cascades are also available. Depending on the connection option, interfacing solutions include IM-T-.. modules, redundant positively guided contactors, safety modules/controllers, and muting modules.

The 13 mm (0.5 in) minimum bend radius for all cordset models accommodates low-clearance installations; cords can exit to the left, right, or back of the sensor, when mounting. The cabled QD option is useful for connecting to splitter cables or other QD cordsets.

Figure 1. EZ-SCREEN LS Safety Light Curtain System: Emitter, Receiver, Interconnecting Cordsets

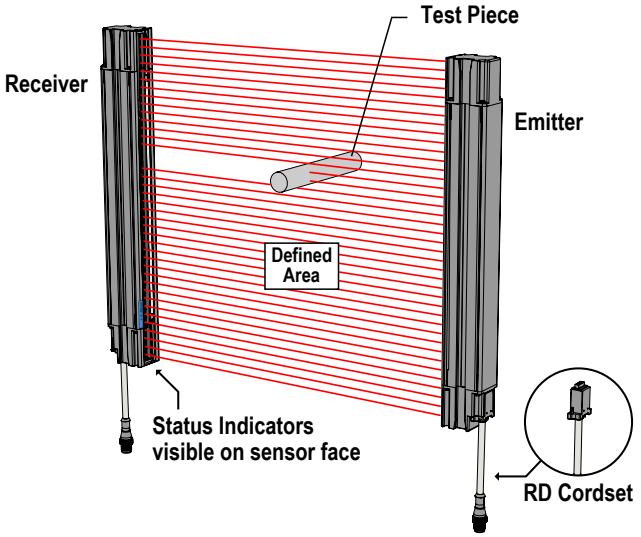

Figure 2. EZ-SCREEN LS Safety Light Curtain cordset options

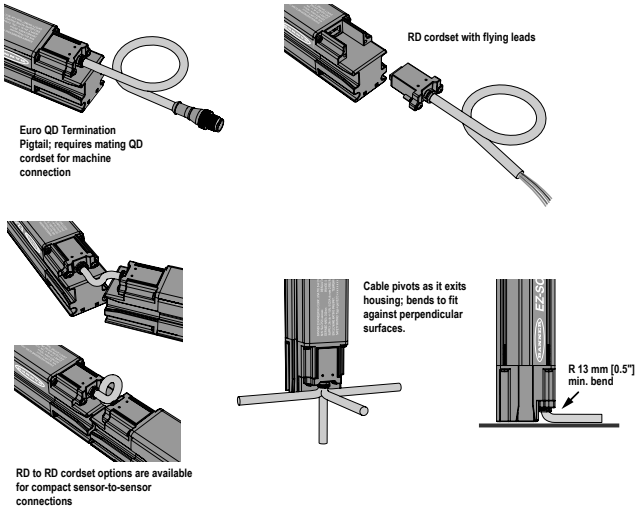

EZ-SCREEN LS Pair model numbers include the following items:

Qty	Description
1	EZ-SCREEN LS Receiver
1	EZ-SCREEN LS Emitter
2	**EZLSA-MBK-11** End-Cap Bracket Kit (four brackets)
2	**EZLSA-MBK-12** Center-Mount Bracket Kit (two brackets included for models with defined areas ≥ 980 mm)
1	Test Rod (STP-13 for 14 mm models; STP-19 for 23 mm models; or STP-20 for 40 mm models)
1	Literature packet with Diagnostic Label

© Banner Engineering Corp. All rights reserved.
www.bannerengineering.com

Table 1. EZ-SCREEN LS Model Key

Product Family	Cascadable	System Type	Resolution	-	Defined Area	Termination
SLL	**Blank** = No **C** = Yes	**E** = Emitter only **R** = Receiver only **P** = Pair (Emitter and Receiver)	**14** = 14 mm **23** = 23 mm **40** = 40 mm	**-**	**280** = 280 mm * **350** = 350 mm **420** = 420 mm **490** = 490 mm **560** = 560 mm **630** = 630 mm **700** = 700 mm **770** = 770 mm **840** = 840 mm **910** = 910 mm **980** = 980 mm **1050** = 1050 mm **1120** = 1120 mm **1190** = 1190 mm **1260** = 1260 mm **1330** = 1330 mm **1400** = 1400 mm **1470** = 1470 mm **1540** = 1540 mm **1610** = 1610 mm **1680** = 1680 mm **1750** = 1750 mm **1820** = 1820 mm **1960L** = 1960 mm** **2100L** = 2100 mm** **2380L** = 2380 mm**	**Blank** = no pigtail, RD connection (for middle/end units in cascade, or with RDLS-8..D cordset); includes standard brackets **P5** = 300 mm pigtail, 5-Pin M12 QD (individual Emitter or Receiver models); includes standard brackets **P55** = 300 mm pigtail, 5-Pin M12 QD (paired models); includes standard brackets **P8** = 300 mm pigtail, 8-Pin M12 QD (individual Emitter or Receiver models); includes standard brackets **P88** = 300 mm pigtail, 8-Pin M12 QD (paired models); includes standard brackets **-S** = no pigtail, RD connection (individual Emitter or Receiver only); brackets ordered separately

* The 280 mm defined area model is not available on cascade systems.

The 1960 mm, 2100 mm, and 2380 mm defined area models are only available in 23 mm resolution non-cascade systems, and only in the **-S option. Contact Banner Engineering for additional model availability.

Example Model: SLLCP23-1470P88

To determine the components required for an EZ-SCREEN LS Safety Light Curtain system using the Model Key:

1. Determine if the application calls for a stand-alone (a single, non-cascade emitter and receiver pair) or if a cascade pair is to be used as a stand-alone and/or with multiple pairs to be ordered are part of a cascaded system.
2. Choose an Emitter (E), a Receiver (R), or a Pair (P).
3. Choose resolution (14, 23, or 40 mm) and defined area.
4. Determine the Machine Interface connection style: 300 mm pigtail QD (5-pin or 8-pin) or a Removable Disconnect (RD).
5. Model number(s) can be verified in the models tables.
6. See "Cordsets" on page 87 for mating cordsets:
    - Models with RD connection use either RDLS-8..D, DELS-11..E, DELSE-81D, or DELSE-51D
    - Models with P8 (P88) suffix use QDE-8..D, DEE2R-8..D, or CSB-M128..M1281
    - Models with P5 (P55) suffix use QDE-5..D, DEE2R-5..D, or CSB-M125..M1251 (MQDEC-406SS is used in applications where pin 5 is open and ground is via mounting brackets)

© Banner Engineering Corp. All rights reserved.
www.bannerengineering.com

7. See "Accessories" on page 87 for additional cordsets (for cascade systems), interfacing solutions, and accessories.
8. For the "-S" models, see "Mounting Dimensions" on page 43 and "Optional Mounting Brackets" on page 94 for bracket options.

3.2.2 Ordering Guide

To order an EZ-SCREEN LS system, see "Figure: Ordering guide for stand-alone systems on page 15:

1. Determine if the application calls for a stand-alone (single, non-cascade emitter and receiver pair) or if a cascade pair is to be used as a stand-alone and/or with multiple pairs to be ordered are part of a cascaded system.
2. Determine the connection style, which is typically dictated by the type of interfacing with the machine's safety-related control system (300 mm pigtail QD (5-pin or 8-pin) or a Removable Disconnect).
3. Choose the model number(s) from the applicable model number table. Model numbers listed in the tables are RD connection style model numbers. Add a P5 (or P55) or a P8 (or P88) at the end of the listed model number for a sensor with a 300 mm (1 ft) cable with an M12 QD.

© Banner Engineering Corp. All rights reserved.
www.bannerengineering.com

Figure 3. Ordering guide for stand-alone systems

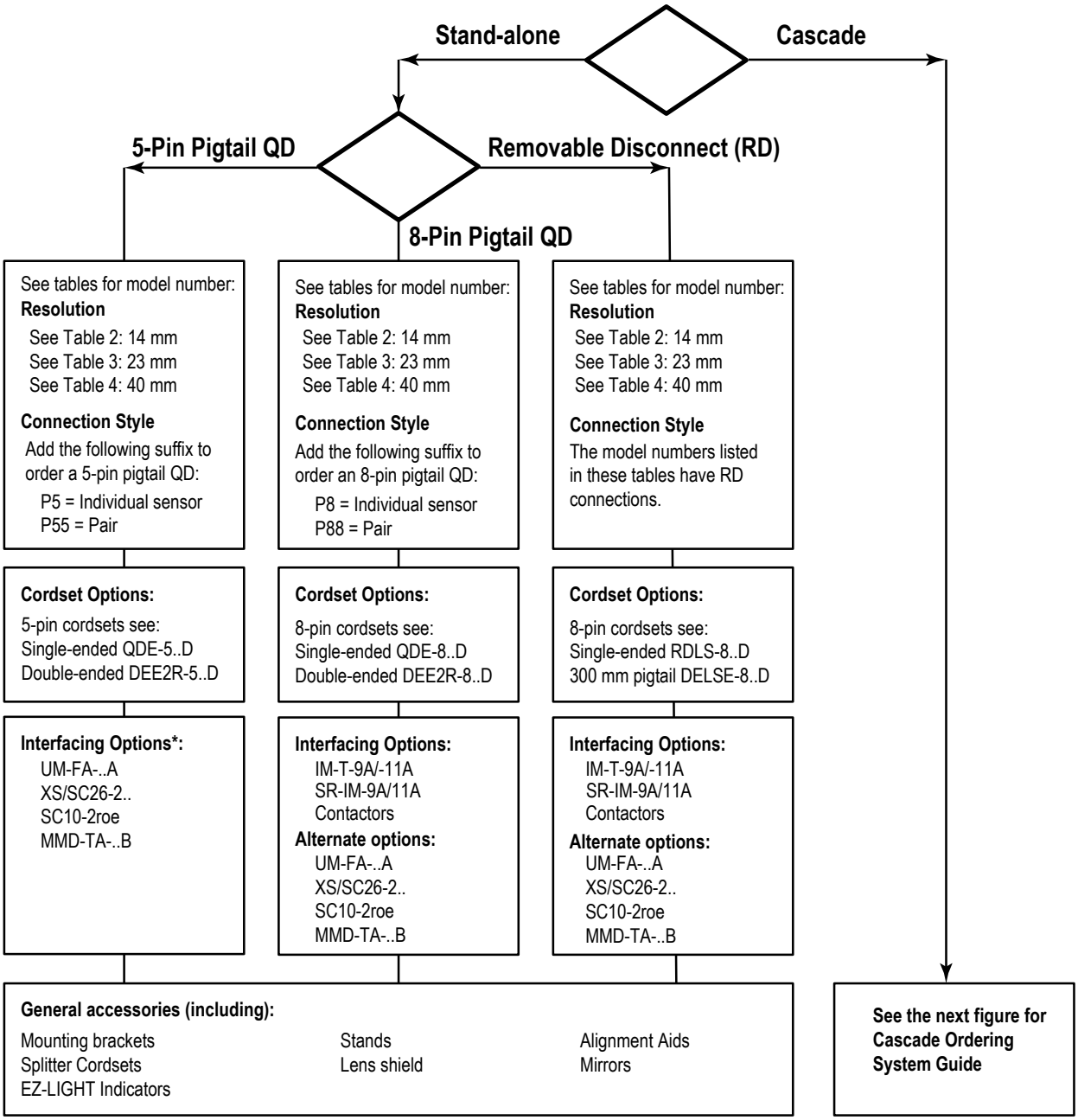

* 5-pin models must be interfaced with a self-checking safety module, safety controller, or safety PLC/PES that conforms to the level of performance required by the risk assessment (such as Control Reliability and/or ISO13849-1 Categories 3 or 4 and PL d or e).

Cordset models, interfacing option models and general accessory models can be found in "Accessories" on page 87

To order a cascade system, see "Figure: Ordering guide for cascading systems on page 16:

1. Determine the configuration of the first sensor pair (a stand-alone or the "Master" is connected to the machine control).
2. Determine the model from the applicable model number table. Model numbers listed in the tables are RD connection-style model numbers. Add a P5 (or P55) or a P8 (or P88) at the end of the listed model number for a sensor with a 300 mm (1 ft) cable with an M12 QD.
3. Determine the remaining sensor pairs (slaves), which will be an RD connection style that uses a DELS-11xxE interconnection cordset.

© Banner Engineering Corp. All rights reserved.
www.bannerengineering.com

Figure 4. Ordering guide for cascading systems

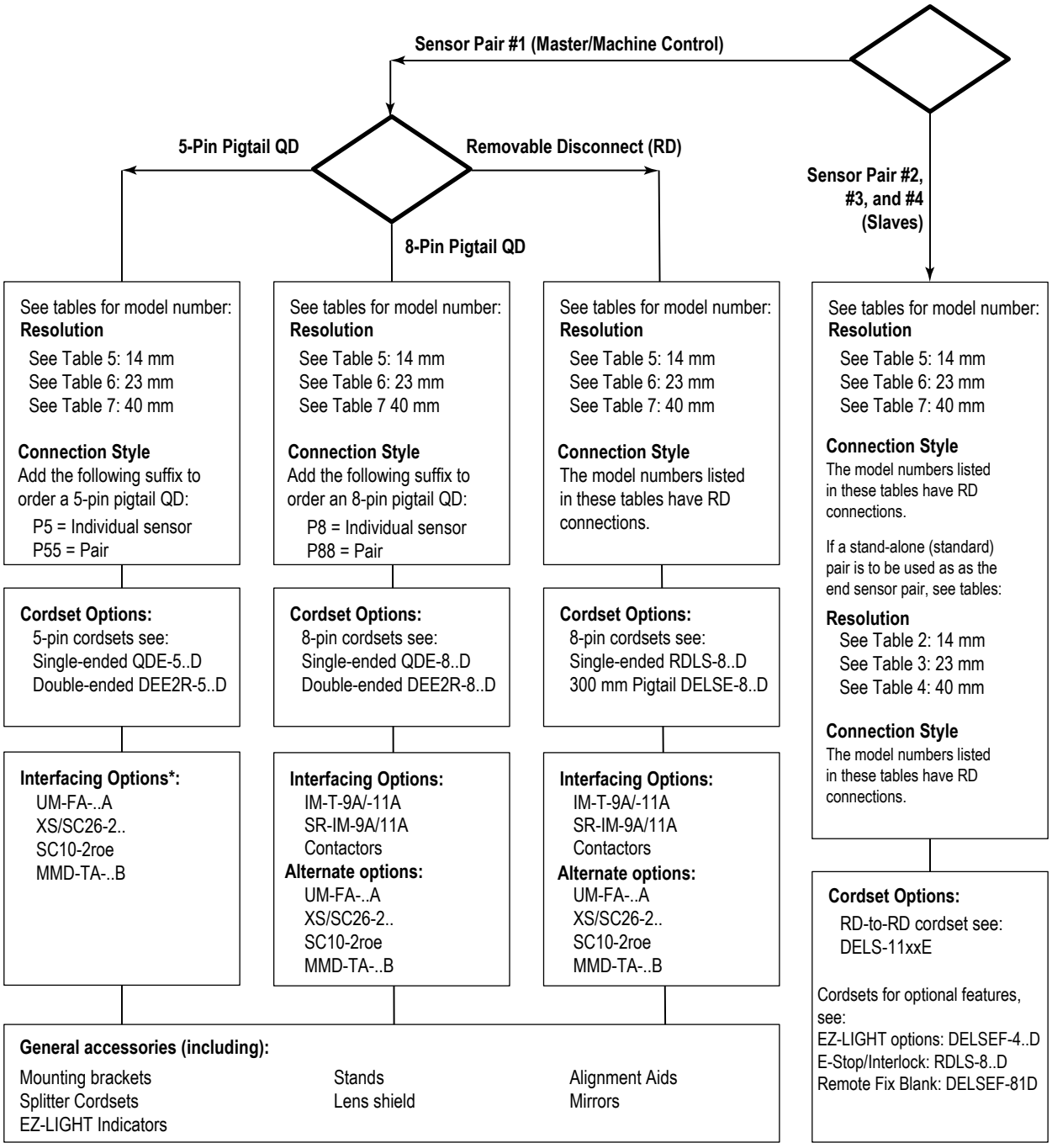

* 5-pin models must be interfaced with a self-checking safety module, safety controller, or safety PLC/PES that conforms to the level of performance required by the risk assessment (such as Control Reliability and/or ISO13849-1 Categories 3 or 4 and PL d or e).

Cordset models, interfacing option models and general accessory models can be found in "Accessories" on page 87

3.2.3 Models

As listed in the following tables, the models include an RD connection (for middle/end units in cascade, or with RDLS-8..D cordset). Add one of these suffixes to the end of the model number(s) listed in the tables below:

- **P5**: 300 mm (1 ft) PVC-jacketed cable with a 5-pin M12 male quick-disconnect connector (individual Emitter or Receiver models)
- **P55**: 300 mm (1 ft) PVC-jacketed cable with a 5-pin M12 male quick-disconnect connector (only Paired models)
- **P8**: 300 mm (1 ft) PVC-jacketed cable with an 8-pin M12 male quick-disconnect connector (individual Emitter or Receiver models)

© Banner Engineering Corp. All rights reserved.
www.bannerengineering.com

- **P88**: 300 mm (1 ft) PVC-jacketed cable with an 8-pin M12 male quick-disconnect connector (only Paired models)
- **-S**: a unit with no mounting brackets (individual Emitter or Receiver models)

Table 2. EZ-SCREEN LS 14 mm Resolution Models (Standard/Stand-alone with RD connection)

Emitter	Receiver	Pair	Defined Area	Response Time, Tr (ms)	Recovery Time, Typ, OSSDs OFF to ON (ms)	
					Non-sync beam blocked	All beams blocked
SLLE14-280	SLLR14-280	SLLP14-280	280 mm	11.6	47	160
SLLE14-350	SLLR14-350	SLLP14-350	350 mm	13.3	55	186
SLLE14-420	SLLR14-420	SLLP14-420	420 mm	15.0	63	211
SLLE14-490	SLLR14-490	SLLP14-490	490 mm	16.7	69	237
SLLE14-560	SLLR14-560	SLLP14-560	560 mm	18.4	78	263
SLLE14-630	SLLR14-630	SLLP14-630	630 mm	20.1	86	288
SLLE14-700	SLLR14-700	SLLP14-700	700 mm	21.8	93	314
SLLE14-770	SLLR14-770	SLLP14-770	770 mm	23.5	101	339
SLLE14-840	SLLR14-840	SLLP14-840	840 mm	25.2	108	365
SLLE14-910	SLLR14-910	SLLP14-910	910 mm	26.9	116	391
SLLE14-980	SLLR14-980	SLLP14-980	980 mm	28.6	122	416
SLLE14-1050	SLLR14-1050	SLLP14-1050	1050 mm	30.3	130	442
SLLE14-1120	SLLR14-1120	SLLP14-1120	1120 mm	32.0	137	467
SLLE14-1190	SLLR14-1190	SLLP14-1190	1190 mm	33.7	145	493
SLLE14-1260	SLLR14-1260	SLLP14-1260	1260 mm	35.4	153	518
SLLE14-1330	SLLR14-1330	SLLP14-1330	1330 mm	37.1	160	544
SLLE14-1400	SLLR14-1400	SLLP14-1400	1400 mm	38.7	168	570
SLLE14-1470	SLLR14-1470	SLLP14-1470	1470 mm	40.4	175	595
SLLE14-1540	SLLR14-1540	SLLP14-1540	1540 mm	42.1	183	621
SLLE14-1610	SLLR14-1610	SLLP14-1610	1610 mm	43.8	191	646
SLLE14-1680	SLLR14-1680	SLLP14-1680	1680 mm	45.5	198	672
SLLE14-1750	SLLR14-1750	SLLP14-1750	1750 mm	47.2	206	697
SLLE14-1820	SLLR14-1820	SLLP14-1820	1820 mm	48.9	215	723

Table 3. EZ-SCREEN LS 23 mm Resolution Models (Standard/Stand-alone with RD Connection)

Emitter	Receiver	Pair	Defined Area	Response Time, Tr (ms)	Recovery Time, Typ, OSSDs OFF to ON (ms)	
					Non-sync beam blocked	All beams blocked
SLLE23-280	SLLR23-280	SLLP23-280	280 mm	8.2	32	110
SLLE23-350	SLLR23-350	SLLP23-350	350 mm	9.1	36	124
SLLE23-420	SLLR23-420	SLLP23-420	420 mm	9.9	40	135
SLLE23-490	SLLR23-490	SLLP23-490	490 mm	10.8	44	148
SLLE23-560	SLLR23-560	SLLP23-560	560 mm	11.6	47	160
SLLE23-630	SLLR23-630	SLLP23-630	630 mm	12.5	51	175
SLLE23-700	SLLR23-700	SLLP23-700	700 mm	13.3	55	186
SLLE23-770	SLLR23-770	SLLP23-770	770 mm	14.2	59	199
SLLE23-840	SLLR23-840	SLLP23-840	840 mm	15.0	63	211
SLLE23-910	SLLR23-910	SLLP23-910	910 mm	15.9	67	225
SLLE23-980	SLLR23-980	SLLP23-980	980 mm	16.7	69	237
SLLE23-1050	SLLR23-1050	SLLP23-1050	1050 mm	17.5	74	249
SLLE23-1120	SLLR23-1120	SLLP23-1120	1120 mm	18.4	78	269
SLLE23-1190	SLLR23-1190	SLLP23-1190	1190 mm	19.2	82	274
SLLE23-1260	SLLR23-1260	SLLP23-1260	1260 mm	20.1	86	288
SLLE23-1330	SLLR23-1330	SLLP23-1330	1330 mm	20.9	89	300
SLLE23-1400	SLLR23-1400	SLLP23-1400	1400 mm	21.8	93	314
SLLE23-1470	SLLR23-1470	SLLP23-1470	1470 mm	22.6	97	325

Continued on page 18

© Banner Engineering Corp. All rights reserved.
www.bannerengineering.com

Continued from page 17

Emitter	Receiver	Pair	Defined Area	Response Time, Tr (ms)	Recovery Time, Typ, OSSDs OFF to ON (ms)	
					Non-sync beam blocked	All beams blocked
SLLE23-1540	SLLR23-1540	SLLP23-1540	1540 mm	23.5	101	339
SLLE23-1610	SLLR23-1610	SLLP23-1610	1610 mm	24.3	104	350
SLLE23-1680	SLLR23-1680	SLLP23-1680	1680 mm	25.2	108	365
SLLE23-1750	SLLR23-1750	SLLP23-1750	1750 mm	26.0	112	376
SLLE23-1820	SLLR23-1820	SLLP23-1820	1820 mm	26.9	116	391
SLLE23-1960L	SLLR23-1960L	SLLP23-1960L	1960 mm	28.6	123	416
SLLE23-2100L	SLLR23-2100L	SLLP23-2100L	2100 mm	30.3	130	442
SLLE23-2380L	SLLR23-2380L	SLLP23-2380L	2380 mm	33.7	145	493

Table 4. EZ-SCREEN LS 40 mm Resolution Models (Standard/Stand-alone with RD Connection)

Emitter	Receiver	Pair	Defined Area	Response Time, Tr (ms)	Recovery Time, Typ, OSSDs OFF to ON (ms)	
					Non-sync beam blocked	All beams blocked
SLLE40-280	SLLR40-280	SLLP40-280	280 mm	8.2	32	110
SLLE40-350	SLLR40-350	SLLP40-350	350 mm	8.2	32	110
SLLE40-420	SLLR40-420	SLLP40-420	420 mm	8.2	32	110
SLLE40-490	SLLR40-490	SLLP40-490	490 mm	8.2	32	110
SLLE40-560	SLLR40-560	SLLP40-560	560 mm	8.2	32	110
SLLE40-630	SLLR40-630	SLLP40-630	630 mm	8.6	34	117
SLLE40-700	SLLR40-700	SLLP40-700	700 mm	9.1	36	124
SLLE40-770	SLLR40-770	SLLP40-770	770 mm	9.5	38	129
SLLE40-840	SLLR40-840	SLLP40-840	840 mm	9.9	40	135
SLLE40-910	SLLR40-910	SLLP40-910	910 mm	10.3	42	142
SLLE40-980	SLLR40-980	SLLP40-980	980 mm	10.8	44	148
SLLE40-1050	SLLR40-1050	SLLP40-1050	1050 mm	11.2	45	155
SLLE40-1120	SLLR40-1120	SLLP40-1120	1120 mm	11.6	47	160
SLLE40-1190	SLLR40-1190	SLLP40-1190	1190 mm	12.0	49	168
SLLE40-1260	SLLR40-1260	SLLP40-1260	1260 mm	12.5	51	175
SLLE40-1330	SLLR40-1330	SLLP40-1330	1330 mm	12.9	53	179
SLLE40-1400	SLLR40-1400	SLLP40-1400	1400 mm	13.3	55	186
SLLE40-1470	SLLR40-1470	SLLP40-1470	1470 mm	13.7	57	193
SLLE40-1540	SLLR40-1540	SLLP40-1540	1540 mm	14.2	59	199
SLLE40-1610	SLLR40-1610	SLLP40-1610	1610 mm	14.6	61	206
SLLE40-1680	SLLR40-1680	SLLP40-1680	1680 mm	15.0	63	211
SLLE40-1750	SLLR40-1750	SLLP40-1750	1750 mm	15.4	65	216
SLLE40-1820	SLLR40-1820	SLLP40-1820	1820 mm	15.9	67	225

Table 5. EZ-SCREEN LS 14 mm Resolution Models (Cascade with RD Connection)

Emitter	Receiver	Pair	Defined Area	Response Time, Tr (ms)	Recovery Time, Typ, OSSDs OFF to ON (ms)	
					Non-sync beam blocked	All beams blocked
SLLCE14-350	SLLCR14-350	SLLCP14-350	350 mm	13.3	55	186
SLLCE14-420	SLLCR14-420	SLLCP14-420	420 mm	15.0	63	211
SLLCE14-490	SLLCR14-490	SLLCP14-490	490 mm	16.7	69	237
SLLCE14-560	SLLCR14-560	SLLCP14-560	560 mm	18.4	78	263
SLLCE14-630	SLLCR14-630	SLLCP14-630	630 mm	20.1	86	288
SLLCE14-700	SLLCR14-700	SLLCP14-700	700 mm	21.8	93	314
SLLCE14-770	SLLCR14-770	SLLCP14-770	770 mm	23.5	101	339

Continued on page 19

© Banner Engineering Corp. All rights reserved.
www.bannerengineering.com

Continued from page 18

Emitter	Receiver	Pair	Defined Area	Response Time, Tr (ms)	Recovery Time, Typ, OSSDs OFF to ON (ms)	
					Non-sync beam blocked	All beams blocked
SLLCE14-840	SLLCR14-840	SLLCP14-840	840 mm	25.2	108	365
SLLCE14-910	SLLCR14-910	SLLCP14-910	910 mm	26.9	116	391
SLLCE14-980	SLLCR14-980	SLLCP14-980	980 mm	28.6	122	416
SLLCE14-1050	SLLCR14-1050	SLLCP14-1050	1050 mm	30.3	130	442
SLLCE14-1120	SLLCR14-1120	SLLCP14-1120	1120 mm	32.0	137	467
SLLCE14-1190	SLLCR14-1190	SLLCP14-1190	1190 mm	33.7	145	493
SLLCE14-1260	SLLCR14-1260	SLLCP14-1260	1260 mm	35.4	153	518
SLLCE14-1330	SLLCR14-1330	SLLCP14-1330	1330 mm	37.1	160	544
SLLCE14-1400	SLLCR14-1400	SLLCP14-1400	1400 mm	38.7	168	570
SLLCE14-1470	SLLCR14-1470	SLLCP14-1470	1470 mm	40.4	175	595
SLLCE14-1540	SLLCR14-1540	SLLCP14-1540	1540 mm	42.1	183	621
SLLCE14-1610	SLLCR14-1610	SLLCP14-1610	1610 mm	43.8	191	646
SLLCE14-1680	SLLCR14-1680	SLLCP14-1680	1680 mm	45.5	198	672
SLLCE14-1750	SLLCR14-1750	SLLCP14-1750	1750 mm	47.2	206	697
SLLCE14-1820	SLLCR14-1820	SLLCP14-1820	1820 mm	48.9	215	723

Table 6. EZ-SCREEN LS 23 mm Resolution Models (Cascade with RD Connection)

Emitter	Receiver	Pair	Defined Area	Response Time, Tr (ms)	Recovery Time, Typ, OSSDs OFF to ON (ms)	
					Non-sync beam blocked	All beams blocked
SLLCE23-350	SLLCR23-350	SLLCP23-350	350 mm	9.1	36	124
SLLCE23-420	SLLCR23-420	SLLCP23-420	420 mm	9.9	40	135
SLLCE23-490	SLLCR23-490	SLLCP23-490	490 mm	10.8	44	148
SLLCE23-560	SLLCR23-560	SLLCP23-560	560 mm	11.6	47	160
SLLCE23-630	SLLCR23-630	SLLCP23-630	630 mm	12.5	51	175
SLLCE23-700	SLLCR23-700	SLLCP23-700	700 mm	13.3	55	186
SLLCE23-770	SLLCR23-770	SLLCP23-770	770 mm	14.2	59	199
SLLCE23-840	SLLCR23-840	SLLCP23-840	840 mm	15.0	63	211
SLLCE23-910	SLLCR23-910	SLLCP23-910	910 mm	15.9	67	225
SLLCE23-980	SLLCR23-980	SLLCP23-980	980 mm	16.7	69	237
SLLCE23-1050	SLLCR23-1050	SLLCP23-1050	1050 mm	17.5	74	249
SLLCE23-1120	SLLCR23-1120	SLLCP23-1120	1120 mm	18.4	78	269
SLLCE23-1190	SLLCR23-1190	SLLCP23-1190	1190 mm	19.2	82	274
SLLCE23-1260	SLLCR23-1260	SLLCP23-1260	1260 mm	20.1	86	288
SLLCE23-1330	SLLCR23-1330	SLLCP23-1330	1330 mm	20.9	89	300
SLLCE23-1400	SLLCR23-1400	SLLCP23-1400	1400 mm	21.8	93	314
SLLCE23-1470	SLLCR23-1470	SLLCP23-1470	1470 mm	22.6	97	325
SLLCE23-1540	SLLCR23-1540	SLLCP23-1540	1540 mm	23.5	101	339
SLLCE23-1610	SLLCR23-1610	SLLCP23-1610	1610 mm	24.3	104	350
SLLCE23-1680	SLLCR23-1680	SLLCP23-1680	1680 mm	25.2	108	365
SLLCE23-1750	SLLCR23-1750	SLLCP23-1750	1750 mm	26.0	112	376
SLLCE23-1820	SLLCR23-1820	SLLCP23-1820	1820 mm	26.9	116	391

Table 7. EZ-SCREEN LS 40 mm Resolution Models (Cascade with RD Connection)

Emitter	Receiver	Pair	Defined Area	Response Time, Tr (ms)	Recovery Time, Typ, OSSDs OFF to ON (ms)	
					Non-sync beam blocked	All beams blocked
SLLCE40-350	SLLCR40-350	SLLCP40-350	350 mm	8.2	32	110

Continued on page 20

© Banner Engineering Corp. All rights reserved.
www.bannerengineering.com

Continued from page 19

Emitter	Receiver	Pair	Defined Area	Response Time, Tr (ms)	Recovery Time, Typ, OSSDs OFF to ON (ms)	
					Non-sync beam blocked	All beams blocked
SLLCE40-420	SLLCR40-420	SLLCP40-420	420 mm	8.2	32	110
SLLCE40-490	SLLCR40-490	SLLCP40-490	490 mm	8.2	32	110
SLLCE40-560	SLLCR40-560	SLLCP40-560	560 mm	8.2	32	110
SLLCE40-630	SLLCR40-630	SLLCP40-630	630 mm	8.6	34	117
SLLCE40-700	SLLCR40-700	SLLCP40-700	700 mm	9.1	36	124
SLLCE40-770	SLLCR40-770	SLLCP40-770	770 mm	9.5	38	129
SLLCE40-840	SLLCR40-840	SLLCP40-840	840 mm	9.9	40	135
SLLCE40-910	SLLCR40-910	SLLCP40-910	910 mm	10.3	42	142
SLLCE40-980	SLLCR40-980	SLLCP40-980	980 mm	10.8	44	148
SLLCE40-1050	SLLCR40-1050	SLLCP40-1050	1050 mm	11.2	45	155
SLLCE40-1120	SLLCR40-1120	SLLCP40-1120	1120 mm	11.6	47	160
SLLCE40-1190	SLLCR40-1190	SLLCP40-1190	1190 mm	12.0	49	168
SLLCE40-1260	SLLCR40-1260	SLLCP40-1260	1260 mm	12.5	51	175
SLLCE40-1330	SLLCR40-1330	SLLCP40-1330	1330 mm	12.9	53	179
SLLCE40-1400	SLLCR40-1400	SLLCP40-1400	1400 mm	13.3	55	186
SLLCE40-1470	SLLCR40-1470	SLLCP40-1470	1470 mm	13.7	57	193
SLLCE40-1540	SLLCR40-1540	SLLCP40-1540	1540 mm	14.2	59	199
SLLCE40-1610	SLLCR40-1610	SLLCP40-1610	1610 mm	14.6	61	206
SLLCE40-1680	SLLCR40-1680	SLLCP40-1680	1680 mm	15.0	63	211
SLLCE40-1750	SLLCR40-1750	SLLCP40-1750	1750 mm	15.4	65	216
SLLCE40-1820	SLLCR40-1820	SLLCP40-1820	1820 mm	15.9	67	225

3.3 Operating Features

The Banner EZ-SCREEN LS Safety Light Curtain models described in this manual feature several functions (depending on model).

3.3.1 Trip Output

The System is configured for Trip Output, which allows the System to enter Run mode automatically. Other measures must be taken to prevent a pass-through hazard; see "Reducing or Eliminating Pass-Through Hazards" on page 31 and the warning below for more information.

The OSSD outputs turn ON after power is applied, and the receiver passes its internal self-test/synchronization and recognizes that all beams are clear. The Trip Output also automatically resets after all beams are cleared.

WARNING:

- **Use of automatic (trip) or manual (latch) start/restart**
- Failure to follow these instructions could result in a serious injury or death.
- Applying power to the Banner Engineering Corp. device, clearing the defined area, or resetting a latch condition must not initiate dangerous machine motion. Design the machine control circuitry so that one or more initiation devices must be engaged to start the machine (a conscious act), in addition to the Banner Engineering Corp. device going into Run mode.

3.3.2 External Device Monitoring (EDM)

The external device monitoring (EDM) feature allows the EZ-SCREEN LS to monitor the status of external devices, such as a machine primary control element (MPCEs). The choices are 1-channel monitoring or no monitoring. EDM is used when the EZ-SCREEN LS OSSD outputs directly control the MPCEs or other external devices.

This feature is only available when an 8-conductor interface is used with an FID 2 or higher receiver.

© Banner Engineering Corp. All rights reserved.
www.bannerengineering.com

3.3.3 Fault Output

The current sourcing (PNP) solid-state output (70 mA maximum) is used for control functions that are not safety related; a typical use is to signal a lockout (fault) to a programmable logic controller (PLC). Available on both the receiver and emitter, the output provides a fault signal (lockout = On). Interrupting (blocking) the sensing field is not considered a lockout, so the Fault Output does not change state.

This feature is available only when an 8-conductor interface is used.

3.3.4 Scan Code Configuration

Use the scan code to allow operation of multiple pairs of emitters and receivers in close proximity without the effects of cross-talk. The emitter and receiver may be configured to use one of two scan codes (1 or 2); a receiver recognizes light only from an emitter with the same scan code. Set the scan code using the wiring on each sensor (see "Scan Code Select" on page 57). The scan code is configured at power-up and remains set until the input is changed and power is cycled. Both the emitter and its corresponding receiver must have the same setting. Cascaded emitters and receivers automatically alternate scan codes based on the scan code of the first (master) pair.

This feature is only available when an 8-conductor interface is used.

3.3.5 Wiring Options

The Machine Interface connection has several options, including:

- A 300 mm (1 ft) pigtail cable with an 8-pin M12 male quick disconnect (QD)
- A 300 mm (1 ft) pigtail cable with a 5-pin M12 male quick disconnect (QD)
- The Removable Disconnect (RD) that can mate with either a double-ended RD cordset as an interconnect between cascaded sensors or an 8-wire flying lead RD cordset

Each connection option is intended for maximum flexibility to solve unique application requirements such as directly connecting the EZ-SCREEN LS to remotely located safety I/O blocks. For interfacing modules or remotely located safety I/O blocks where pin 5 of a 5-pin M12 QD is not earth ground, a 4-pin cordset where pin 5 is not physically present or is not electrically connected can be used (such as MQDEC-406SS double-ended cordset). In such situations, earth ground must be provided via the mounting brackets.

Additionally, an EZ-SCREEN LS emitter can be connected either to its own power supply or to the receiver cable, color-for-color. The color-for-color wiring allows the emitter and receiver positions to be interchanged (swapped) without rewiring.

Figure 5. 300 mm Pigtail with M12 QD

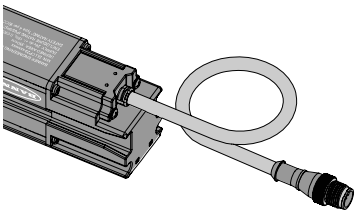

Figure 6. RD Connection with 8-wire Flying Lead Cordset

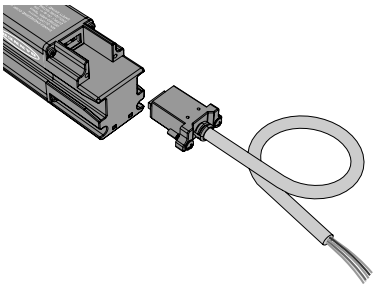

Figure 7. RD Connection with Double-ended RD Cordset

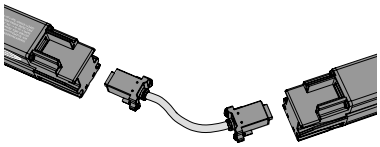

3.3.6 Cascading

Up to four sensor pairs (any length or resolution) can be combined into one system. The cascade system automatically configures at power up when the terminator plug is installed (pre-installed from the factory) or when a standard sensor pair or an interfacing cordset is used at the end of the series.

Double-ended **DELS-11xE** cordsets are required for connecting sensors in a cascade.

3.3.7 EZ-LIGHT® Indication

EZ-SCREEN LS cascading models can connect and remotely locate an EZ-LIGHT or other indicator using a DELSEF-4xD cordset. Solid-state current sourcing (PNP) outputs (24 V DC at 100 mA) allow for the connection of remote indicators or other devices for non-safety status information that includes OSSDs ON or OSSDs OFF/Lockout (flashing).

© Banner Engineering Corp. All rights reserved.

Additionally, EZ-LIGHT model EZLSA-K30LGR (patent pending) is designed to mount directly to the end of a cascade receiver via the cascade RD connector. The EZLSA-K30LGR provides a replaceable integral solution with a bright 360° red/green indication.

For the EZ-SCREEN LS standard (non-cascade) 8-pin pigtail QD models, a CSB-M128..M1281 splitter cable and optional DEE2R-8..D double-ended cables can be used with specific models of EZ-LIGHTs at the machine interface connection. The EZ-LIGHT can be remotely mounted on the machine frame or another convenient mounting surface and provides clear, 360° indication of the EZ-SCREEN LS receiver's OSSD output status.

For both standard and cascade solutions, refer to the EZ-LIGHTS listed in the "Accessories" on page 87.

Figure 8. EZ-SCREEN LS with M18 EZ-LIGHT



Figure 9. EZ-SCREEN LS with EZLSA-K30LGR EZ-LIGHT

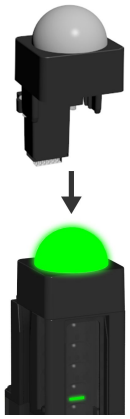

Figure 10. EZ-SCREEN LS with TL50 EZ-LIGHT



3.3.8 Interfacing an E-Stop Button or Interlocking Switch

EZ-SCREEN LS cascading models can connect electrical (hard) contacts from external devices, such as emergency stop buttons and interlocking switches, by using an RDLS-8..D cordset. The cascade input may be used to monitor emergency stop buttons, interlocked gates, or guards and meets or exceeds the requirements for OSHA/ANSI control reliability and up to Category 4 PLe, per ISO 13849-1.

3.3.9 Remote Fixed Blanking

On cascade models, fixed blanking is available to, in effect, disable beams that would otherwise be continually blocked by a stationary object. One or multiple areas within an EZ-SCREEN LS sensor pair may be blanked out, with a minimum of one beam between two blanked areas.

The first sensing beam (CH1 synchronization beam) at the display end of sensor must remain clear (cannot be blanked); any other beam may be blanked. All beams of a fixed blanked area must remain blocked during operation for the OSSDs to remain ON.

The Remote Fixed Blanking feature can be used on an EZ-SCREEN LS cascade receiver as a stand-alone system or in a cascaded system. A DELSEF-81D cordset used with a EZA-RBK-1 Remote Blanking Key Switch or a RDLS-8..D cordset with a user-supplied switch and indicator provides a convenient means to program the blanked area. (See "Remote TEACH Fixed Blanking (Wiring)" on page 85.)

The remote programming is effective on all receivers in the cascaded systems (for example, multiple areas can be blanked on different sensor pairs). After programming, the DELSEF-81D cordset and EZA-RBK-1 Remote Blanking Key Switch can be removed (with power OFF) and replaced by the terminator plug, an EZ-LIGHT (integral or remotely mounted), or an Emergency Stop/Interlocking switch via a RDLS-8..D cordset.

© Banner Engineering Corp. All rights reserved.
www.bannerengineering.com

3.3.10 Status Indicators

Status indicators on both the emitter and receiver are visible on each sensor's front panel.

Emitter	
Bi-color red/green Status indicator—shows whether power is applied, and whether the emitter is in RUN mode (green) or Lockout condition (flashing red) . *1-Digit Diagnostic Display*—indicates configuration or specific error conditions.	*Figure 11. Status Indicators—Emitter* 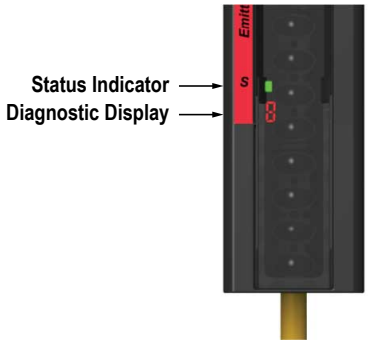

Receiver	
Bi-color red/green Status indicator—shows system status: • outputs are ON or OFF (green ON or red OFF), or • the System is in Lockout condition (flashing red) *Amber RUN mode indicator*—shows system status: • RUN mode (ON), or • Lockout (OFF) *1-Digit Diagnostic Display*—indicates configuration or specific error conditions, or the total number of blocked beams. *Bi-color red/green Alignment indicators*—show status of a group of beams (+/- 35 mm of indicator) along the length of the exit window: • aligned and clear (green ON), or • blocked and/or misaligned (red ON), • fixed blanked area (flashing green), • lockout (all OFF), or • Beam 1 (sync) is blocked (Alignment Indicator 1 is red and all others are OFF).	*Figure 12. Status Indicators—Receiver* 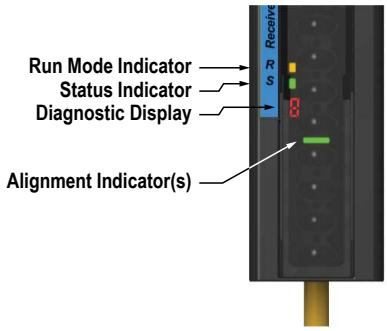

© Banner Engineering Corp. All rights reserved.
www.bannerengineering.com

Chapter Contents

4.1 General Specifications 24
4.2 Receiver Specifications 25
4.3 Emitter Specifications 25
4.4 Dimensions 26

Chapter 4 Specifications

4.1 General Specifications

Supply Current (mA)

	Emitter		Receiver*		
				Cascade**	Standard
Length	Maximum***	Typical	Maximum***	Typical	Typical
280	30	25	112	-	69
350	30	25	115	100	72
420	30	25	117	102	74
490	30	25	119	104	76
560	30	25	122	106	78
630	30	25	124	108	80
700	31	25	127	110	82
770	31	26	129	112	84
840	31	26	132	114	86
910	31	26	134	117	89
980	31	26	137	119	91
1050	31	26	139	121	93
1120	31	26	141	123	95
1190	31	26	144	125	97
1260	32	26	146	127	99
1330	32	26	149	129	101
1400	32	26	151	131	103
1470	32	27	154	134	106
1540	32	27	156	136	108
1610	32	27	159	138	110
1680	32	27	161	140	112
1750	32	27	163	142	114
1820	32	27	166	144	116
1960	33	27	171	N/A	120
2100	33	27	176	N/A	125
2380	33	28	185	N/A	133

*Supply current exclusive of OSSD1 and OSSD2 loads (up to an additional 0.5 A each) and Fault Output load (up to 0.070 A).

**Adding an indicator (EZ-LIGHT) to the CSSI will increase the receiver's current draw. Consult the indicator specifications for the value of the additional current.

***Maximum current occurs at a supply voltage of 20 V DC.

Supply Voltage at the Device

24 V DC ±15% (use a SELV-rated power supply according to EN IEC 60950).

The external voltage supply must be capable of buffering brief mains interruptions of 20 ms, as specified in IEC/EN 60204-1.

Short Circuit Protection

All inputs and outputs are protected from short circuits to +24 V DC or DC common

Residual Ripple

±10% maximum

Operating Range

280 mm to 1820 mm length models: 0.1 m to 12 m (4 in to 39 ft)

1890 mm to 2380 mm length models: 0.1 m to 10 m (4 in to 32.8 ft)

The range decreases with the use of mirrors and/or lens shields:

- Lens shields — approx 10% less range per shield
- Glass-surface mirrors — approx 8% less range per mirror

See the specific mirror datasheet for more information.

Electrical Safety Class

III (per IEC 61140: 1997)

Resolution

14 mm, 23 mm, or 40 mm, depending on model

Effective Aperture Angle (EAA)

Meets Type 4 requirements per IEC 61496-2

Enclosure

Extruded aluminum housing with black anodized (previously units had a yellow polyester powder finish) finish standard and well-sealed, rugged die-cast zinc end caps, acrylic lens cover

Mounting Hardware

Emitter and receiver each are supplied with a pair of end-mounting brackets. Models longer than 910 mm also include an additional center-mount bracket for support. Mounting brackets are 8-gauge cold-rolled steel, black zinc finish.

For models ending in -S, all mounting hardware is ordered separately.

The 1890 mm to 2380 mm models require at least 2 center brackets.

Removable Disconnect

See "Cordsets" on page 87

Tighten screws to 2.6 in/lbs to ensure a solid connection

Cables and Connections

See "Cordsets" on page 87

© Banner Engineering Corp. All rights reserved.
www.bannerengineering.com

Safety Rating

Type 4 per IEC 61496-1, -2

Category 4 PL e per EN ISO13849-1

SIL3 per IEC 61508; SIL CL3 per IEC 62061

PFHd:

Non-Cascade 1.30×10^{-10}

1-Pair Cascade 3.92×10^{-10}

2-Pair Cascade 7.83×10^{-10}

3-Pair Cascade 1.18×10^{-9}

4-Pair Cascade 1.57×10^{-9}

Proof Test Interval: 20 years

Operating Conditions

–20 °C to +55 °C (–4 °F to +131°F)

95% maximum relative humidity (non-condensing)

Enclosure Ratings

280 mm to 1820 mm length models: IP65/IP67

1890 mm to 2380 mm length models: IP65

Vibration and Mechanical Shock

Components have passed vibration and shock tests according to IEC 61496-1 (Class 3M4). This includes vibration (30 cycles) of 5 to 150 Hz at 3.5 mm (0.14 in) amplitude and shock of 15 g for 6 milliseconds (600 cycles).

Certifications

Banner Engineering BV
Park Lane, Culliganlaan 2F bus 3
1831 Diegem, BELGIUM

Turck Banner LTD Blenheim House
Blenheim Court
Wickford, Essex SS11 8YT
GREAT BRITAIN

4.2 Receiver Specifications

Response Time

Dependent on the number of sensing beams; for the response time, see "EZ-SCREEN LS Models" on page 12

EDM Input (Available with 8-Conductor Models)

+24 V DC signals from external device contacts can be monitored (one-channel or no monitoring) via the EDM terminal in the receiver.

High Signal: 10 to 30 V DC at 30 mA typical

Low Signal: 0 to 3 V DC

Recovery Time

Blocked to Clear (OSSDs turn On): Dependent on the number of beams and whether the first beam (CH 1 synchronization beam) has been blocked. For specific values, see "EZ-SCREEN LS Models" on page 12.

CSSI Status Output Switching Capacity

Current-sourcing (PNP) solid-state output, 24 V DC at 100 mA maximum

Strobe Light Immunity

Totally immune to one Federal Signal Corp. "Fireball" model FB2PST strobe

Output Signal Switching Devices (OSSDs)

Two redundant solid-state 24 V DC, 0.5 A maximum sourcing OSSD (Output Signal Switching Device) safety outputs (Use optional interface solutions for AC or larger DC loads)

ON state voltage: > Vin – 1.5 V DC

OFF state voltage: 0 V DC typical, 1 V DC maximum (no load)

OFF-State, maximum allowed external voltage: 1.5 V DC(1)

Maximum load capacitance: 1.0 µF

Maximum cable resistance to load: 5 ohms per wire

Maximum leakage current: 50 µA (with open 0 V)

OSSD test pulse width: 200 µs typical

OSSD test pulse period: 200 ms typical

Switching current: 0 A minimum; 0.5 A maximum (per OSSD)

(1) The maximum voltage allowed on the OSSDs in the OFF-state without a lockout occurring. This voltage may occur, for example, from the input structure of a safety relay module connected to the EZ-SCREEN LS OSSDs.

Fault Output Switching Capacity (Available with 8-Conductor Models)

Current-sourcing (PNP) solid-state output, 24 V DC at 70 mA maximum

Scan Code Input (Available with 8-Conductor Models)

High Signal: 10 to 30 V DC at 30 mA typical

Low Signal: 0 to 3 V DC

Scan Code Selection: 8-pin/8-wire connection only (5-pin systems are Scan Code 1)

- Select Scan Code 1 by connecting pin 8 (violet wire) to 0 V DC or leaving it open (not connected)
- Select Scan Code 2 by connecting pin 8 (violet wire) to +24 V DC

Status Indicators

Amber Run Mode Indicator: indicates the System is ready for operation

Bi-color (red/green) Status indicator: indicates general system and output status

Bi-color (red/green) Alignment Status indicators: indicate condition (clear or blocked beam) of a defined group of beams (±35 mm of indicator)

7-Segment Diagnostic indicator (1 digit): indicates proper operation, scan code, error code, or total number of blocked beams

Ambient Light Immunity

10,000 lux at 5° angle of incidence

4.3 Emitter Specifications

Emitter Elements Wavelength

Infrared LEDs, 850 nm at peak emission

Fault Output Switching Capacity

Current-sourcing (PNP) solid-state output, 24 V DC at 70 mA maximum

© Banner Engineering Corp. All rights reserved.
www.bannerengineering.com

Position ID Input (Available with 8-Conductor Models)

Input connected to +24 V DC to identify emitter's position as a stand-alone or the first (master) in a cascade system.

Status Indicators

One bi-color (Red/Green) Status Indicator: indicates operating mode, lockout or power Off condition

7-Segment Diagnostic indicator (1 digit): indicates proper operation, scan code, or error code

Scan Code Input (Available with 8-Conductor Models)

High Signal: 10 to 30 V DC at 30 mA typical

Low Signal: 0 to 3 V DC

Scan Code Selection: 8-pin/8-wire connection only (5-pin systems are Scan Code 1)

- Select Scan Code 1 by connecting pin 8 (violet wire) to 0 V DC or leaving it open (not connected)
- Select Scan Code 2 by connecting pin 8 (violet wire) to +24 V DC

4.4 Dimensions

End Brackets Mounted Outward

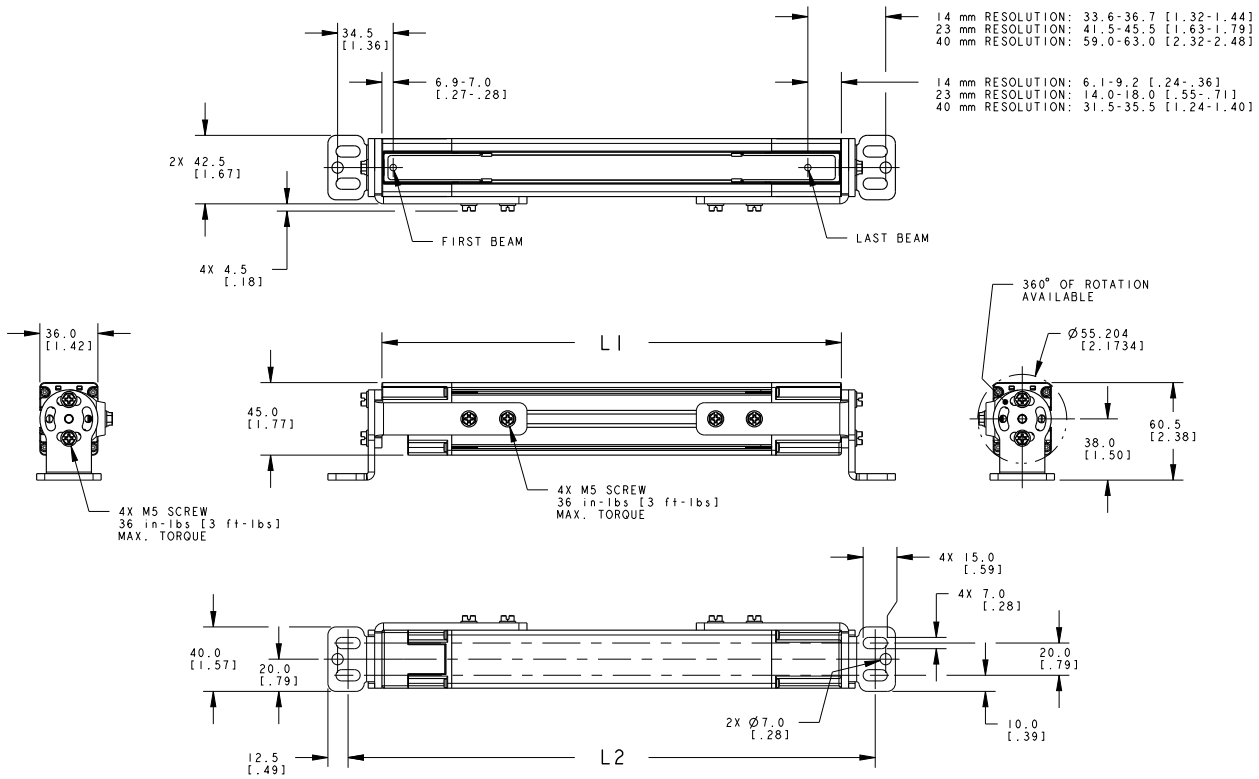

End Bracket with EZ-LIGHT

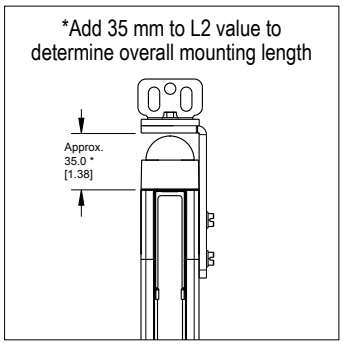

End Brackets Mounted Inward

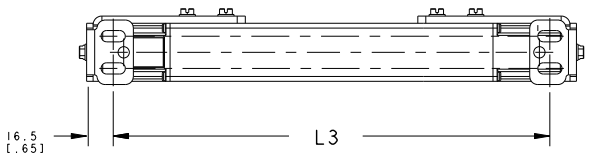

© Banner Engineering Corp. All rights reserved.
www.bannerengineering.com

Emitter/Receiver Model	Housing Length (L1)	Hole to Hole Length with Brackets Out (L2) (mm)	Hole to Hole Length with Brackets In (L3) (mm)	Defined Area [2] (mm)
SLL...-280…	285 mm (11.2 in)	327.1	269.1	280
SLL...-350…	355 mm (14.0 in)	397.1	339.1	350
SLL...-420…	425 mm (16.7 in)	466.6	408.6	420
SLL...-490…	495 mm (19.5 in)	536.6	478.6	490
SLL...-560…	564 mm (22.2 in)	606.1	548.1	560
SLL...-630…	634 mm (25.0 in)	676.1	618.1	630
SLL...-700…	704 mm (27.7 in)	746.1	688.1	700
SLL...-770…	774 mm (30.5 in)	816.1	758.1	770
SLL...-840…	844 mm (33.2 in)	885.6	827.6	840
SLL...-910…	914 mm (36.0 in)	955.6	897.6	910
SLL...-980…	983 mm (38.7 in)	1025.1	967.1	980
SLL...-1050…	1053 mm (41.5 in)	1095.1	1037.1	1050
SLL...-1120…	1123 mm (44.2 in)	1165.1	1107.1	1120
SLL...-1190…	1193 mm (47.0 in)	1235.1	1177.1	1190
SLL...-1260…	1263 mm (49.7 in)	1304.6	1246.6	1260
SLL..-1330…	1333 mm (52.5 in)	1374.6	1316.6	1330
SLL...-1400…	1402 mm (55.2 in)	1444.1	1386.1	1400
SLL...-1470…	1472 mm (58.0 in)	1514.1	1456.1	1470
SLL...-1540…	1542 mm (60.7 in)	1584.1	1526.1	1540
SLL...-1610…	1612 mm (63.5 in)	1654.1	1596.1	1610
SLL...-1680…	1682 mm (66.2 in)	1723.6	1665.6	1680
SLL...-1750…	1752 mm (69.0 in)	1793.6	1735.6	1750
SLL...-1820…	1821 mm (71.7 in)	1863.1	1805.1	1820
SLL...-1960L...	1961 mm (77.2 in)	2003.1	1945.1	1960
SLL...-2100L…	2101 mm (84.9 in)	2142.6	2071.6	2100
SLL...-2380L…	2380 mm (95.9 in)	2422.1	2351.1	2380

[2] Nominal measurement

© Banner Engineering Corp. All rights reserved.
www.bannerengineering.com

Chapter Contents

5.1 Mechanical Installation Considerations 28
5.2 Mounting System Components 38

Chapter 5 Mechanical Installation

The EZ-SCREEN LS system performance as a safety guarding device depends on:

- The suitability of the application
- The proper mechanical and electrical installation and interfacing to the guarded machine

WARNING:

- **Read this Section Carefully Before Installing the System**
- **Failure to follow these instructions could result in serious injury or death.**
- If all mounting, installation, interfacing, and checkout procedures are not followed properly, this Banner Engineering Corp. device cannot provide the protection for which it was designed.
- The user is responsible for ensuring that all local, state, and national laws, rules, codes, or regulations relating to the installation and use of this control system in any particular application are satisfied. Ensure that all legal requirements have been met and that all technical installation and maintenance instructions contained in this manual are followed.
- The user has the sole responsibility to ensure that this Banner Engineering Corp. device is installed and interfaced to the guarded machine by Qualified Persons, in accordance with this manual and applicable safety regulations. A Qualified person is a person who, by possession of a recognized degree or certificate of professional training, or who, by extensive knowledge, training and experience, has successfully demonstrated the ability to solve problems relating to the subject matter and work.

5.1 Mechanical Installation Considerations

The two primary factors that influence the layout of the EZ-SCREEN LS system mechanical installation are:

- Minimum distance/safety distance (see "Calculating the Safety Distance (Minimum Distance)" on page 28)
- Eliminating pass-through hazard/hazard points via supplemental guarding (see "Reducing or Eliminating Pass-Through Hazards" on page 31)

Other considerations include:

- Emitter and Receiver Orientation (see "Emitter and Receiver Orientation" on page 36)
- Adjacent Reflective Surfaces (see "Adjacent Reflective Surfaces" on page 33)
- Use of Corner Mirrors (see "Use of Corner Mirrors" on page 35)
- Installation of Multiple Systems (see "Installation of Multiple Systems" on page 37)

WARNING:

- **Position the System Components Carefully**
- Failure to observe this warning could result in serious injury or death.
- Position the system components such that the hazard point/hazard cannot be accessed by reaching over, under, around, or through the sensing field. Additional and supplemental guarding may be required.

5.1.1 Calculating the Safety Distance (Minimum Distance)

Safety Distance (Ds), also called Minimum Distance (S), is the minimum distance required between the defined area and the closest reachable hazard point. The distance is calculated so that when an object or a person is detected (by blocking a sensing beam), the EZ-SCREEN LS sends a stop signal to the machine, causing it to stop by the time the object or person can reach any machine hazard point.

© Banner Engineering Corp. All rights reserved.
www.bannerengineering.com

The distance is calculated differently for U.S. and European installations. Both methods take into account several factors, including a calculated human speed, the total system stopping time (which itself has several components), and the depth penetration factor. After the distance has been determined, record the calculated distance on the Daily Checkout Card.

WARNING:

- **Calculate the Safety Distance (Minimum Distance)**
- Failure to establish and maintain the safety distance (minimum distance) could result in serious injury or death.
- Mount the components at a distance from the nearest hazard such that an individual cannot reach the hazard before cessation of the hazardous motion or situation. Calculate this distance using the supplied formulas, as described by ANSI B11.19 and ISO 13855. Mount the components more than 100 mm (4 in) away from the hazard, regardless of the calculated value.

Figure 13. Safety distance (minimum distance) and hard (fixed) guarding

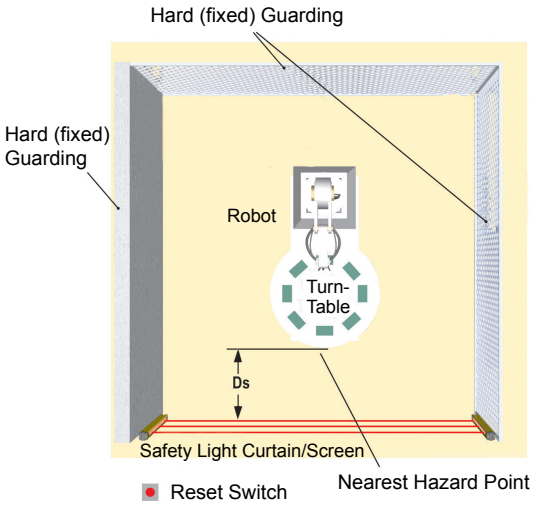

Formula and Examples

Notes:

1. The OSHA-recommended hand speed constant **K** has been determined by various studies and, although these studies indicate speeds of 1600 mm/sec. (63 in/sec.) to more than 2500 mm/sec. (100 in/sec.), they are not conclusive determinations. Consider all factors, including the physical ability of the operator, when determining the value of **K** to be used.
2. The recommended hand speed constant **K**, derived from data on approach speeds of the body or parts of the body as stated in ISO 13855.
3. **Ts** is usually measured by a stop-time measuring device. If the machine manufacturer's specified stop time is used, at least 20% should be added to allow for possible clutch/brake system deterioration. This measurement must take into account the slower of the two MPCE channels, and the response time of all devices or controls that react to stop the machine.

WARNING:

- **Stop time (Ts) must include the response time of all devices or controls that react to stop the machine**
- If all devices are not included, the calculated safety distance (Ds or S) will be too short, which can lead to serious injury or death.
- Include the stop time of all relevant devices and controls in your calculations.
- If required, each of the two machine primary control elements (MPCE1 and MPCE2) must be capable of immediately stopping the dangerous machine motion, regardless of the state of the other. These two channels of machine control need not be identical, but the stop time performance of the machine (Ts, used to calculate the safety distance) must take into account the slower of the two channels.

© Banner Engineering Corp. All rights reserved.
www.bannerengineering.com

Calculations for US Applications

The Safety (Separation) Distance formula for U.S. applications:

```
Ds = K × (Ts + Tr) + Dpf
```

Ds
the safety distance, in inches

K
1600 mm per second (or 63 in per second), the OSHA 29CFR1910.217, and ANSI B11.19 recommended hand-speed constant (see Note 1 below)

Ts
the overall stop time of the machine (in seconds) from the initial stop signal to the final ceasing of all motion, including stop times of all relevant control elements (for example, IM-T-.. Interface Modules) and measured at maximum machine velocity (see Note 3 below)

Tr
the maximum response time, in seconds, of the EZ-SCREEN LS emitter/receiver pair (depending on model)

Dpf
the added distance due to the depth penetration factor as prescribed in OSHA 29CFR1910.217, and ANSI B11.19 for U.S. applications. See Depth Penetration Factor (Dpf) table below or calculate using the formula (in mm): Dpf = 3.4 × (S - 7) where S is the resolution of the light curtain (for S ≤ 63 mm).

Table 8. Depth Penetration Factor (Dpf)

14 mm System	23 mm System	40 mm System
24 mm (0.94 in)	54 mm (2.14 in)	112 mm (4.4 in)

US Application example: Model SLLP23-560P88
K = 63 in per second
Ts = 0.32 (0.250 seconds is specified by the machine manufacturer; plus 20% safety factor; plus 20 ms interface module IM-T-9A response)
Tr = 0.0116 second (the specified SLLP23-560P88 response time)
Dpf = 2.14 in (for 23 mm resolution)
Ds = 63 × (0.32 + 0.0116) + 2.14 = 23 in
Mount the EZ-SCREEN LS emitter and receiver so that no part of the defined area is closer than 23 inches to the closest reachable hazard point on the guarded machine.

Calculations for European Applications

The Minimum Distance formula for European applications:

```
S = (K × T) + C
```

S
the Minimum Distance, in mm, from danger zone to light screen center line

K
hand-speed constant (see Note 2 below); **2000 mm/s** (for Minimum Distances ≤ 500 mm) **1600 mm/s** (for Minimum Distances > 500 mm)

T
the overall machine stopping response time (in seconds), from the physical initiation of the safety device and the machine coming to a stop (or the hazard removed). This can be broken down into two parts: **Ts** and **Tr** where **T** = **Ts** + **Tr**

C
the additional distance, in mm, based on the intrusion of a hand or object towards the danger zone prior to actuation of a safety device. Calculate using the formula (in mm):

```
C = 8 × (d - 14)
```

where `d` is the resolution of the light curtain (for `d` ≤ 40 mm).

Table 9. Intrusion Factor (C)

14 mm System	23 mm System	40 mm System
0 mm (0 in)	72 mm (2.8 in)	208 mm (8.2 in)

European Application example: Model SLLP23-560P88
K = 1600 mm per second

Continued on page 31

© Banner Engineering Corp. All rights reserved.
www.bannerengineering.com

Continued from page 30

European Application example: Model SLLP23-560P88
T = 0.3316 (0.250 seconds is specified by the machine manufacturer; plus 20% safety factor; plus 20 ms interface module IM-T-9A response), plus 0.0116 seconds (the specified SLLP23-560P88 response time)
C = 8 × (23 - 14) = 72 mm (for 23 mm resolution)
S = (1600 × 0.3316) + 72 = 603 mm
Mount the EZ-SCREEN LS emitter and receiver so that no part of the defined area will be closer than 603 mm to the closest reachable hazard point on the guarded machine.

5.1.2 Reducing or Eliminating Pass-Through Hazards

A pass-through hazard is associated with applications where personnel may pass through a safeguard, such as the EZ-SCREEN LS Safety Light Curtain (which issues a stop command to remove the hazard), and then continues into the guarded area. This is common in access and perimeter guarding applications. Subsequently, their presence is no longer detected, and the related danger becomes the unexpected start or restart of the machine while personnel are within the guarded area.

A pass-through hazard typically results from large safety distances calculated from long stopping times, large minimum object sensitivities, reach-over, reach-through, or other installation considerations. A pass-through hazard can be generated with as little as 75 mm (3 in) between the sensing field and the machine frame or hard (fixed) guarding.

Eliminate or reduce pass-through hazards whenever possible. While it is recommended to eliminate the pass-through hazard altogether, this may not be possible due to machine layout, machine capabilities, or other application considerations.

One solution is to ensure that personnel are continually sensed while within the hazardous area. This can be accomplished by using supplemental guarding, such as described by the safety requirements in ANSI B11.19 or other appropriate standards.

An alternative method is to ensure that once the safeguarding device is tripped it will latch and will require a deliberate manual action to reset. This method of safeguarding relies upon the location of the reset switch as well as safe work practices and procedures to prevent an unexpected start or restart of the guarded machine.

WARNING: Use of the Banner device for Access or Perimeter Guarding— If a Banner device is installed in an application that results in a pass-through hazard (for example, perimeter guarding), either the Banner device or the Machine Primary Control Elements (MPCEs) of the guarded machine must cause a Latched response following an interruption of the defined area. The reset of this Latched condition may only be achieved by actuating a reset switch that is separate from the normal means of machine cycle initiation.

WARNING:

- **Perimeter guarding applications**
- Failure to observe this warning could result in serious injury or death.
- Use lockout/tagout procedures per ANSI Z244.1, or use additional safeguarding as described by ANSI B11.19 safety requirements or other applicable standards if a passthrough hazard cannot be eliminated or reduced to an acceptable level of risk.

5.1.3 Supplemental Safeguarding

As described in "Calculating the Safety Distance (Minimum Distance)" on page 28, properly position the EZ-SCREEN LS such that an individual cannot reach through the defined area and access the hazard point before the machine has stopped.

Additionally, the hazard cannot be accessible by reaching around, under, or over the defined area. To accomplish this,supplemental guarding (hard (fixed) guard, mechanical barriers, such as screens or bars), as described by ANSI B11.19 safety requirements or other appropriate standards, must be installed. Access will then be possible only through the defined area of the EZ-SCREEN LS System or through other safeguarding that prevents access to the hazard (see "Figure: An example of supplemental safeguarding on page 32).

The mechanical barriers used for this purpose are typically called a hard (fixed) guard; there must be no gaps between the hard (fixed) guarding and the defined area. Any openings in the hard (fixed) guarding must comply with the safe opening requirements of ANSI B11.19 or other appropriate standard.

© Banner Engineering Corp. All rights reserved.
www.bannerengineering.com

Figure 14. An example of supplemental safeguarding

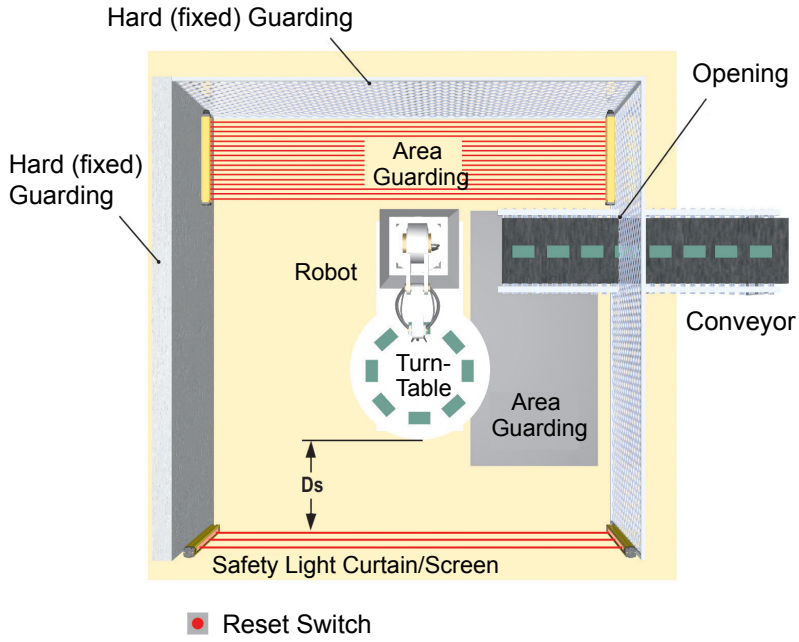

"Figure: An example of supplemental safeguarding on page 32 shows an example of supplemental safeguarding inside a robotic work cell. The EZ-SCREEN LS, in conjunction with the hard (fixed) guarding, is the primary safeguard. Supplemental safeguarding (such as a horizontal-mounted safety light screen as an area guard) is required in areas that cannot be viewed from the reset switch (for example, behind the robot and the conveyor). Additional supplemental safeguarding may be required to prevent clearance or trapping hazards (for example, a safety mat as an area guard between the robot, the turntable, and the conveyor).

WARNING:

- **The hazard must be accessible only through the sensing field**
- Incorrect system installation could result in serious injury or death.
- The installation of the EZ-SCREEN LS must prevent any individual from reaching around, under, over or through the defined area and into the hazard without being detected.
- See OSHA CFR 1910.217, ANSI B11.19, and/or ISO 14119, ISO 14120 and ISO 13857 for information on determining safety distances and safe opening sizes for your guarding device. Mechanical barriers (for example, hard (fixed) guarding) or supplemental safeguarding might be required to comply with these requirements.

5.1.4 Reset Switch Location

The EZ-SCREEN LS has a trip output (automatic power-up and automatic reset) that turns the OSSD outputs ON when the defined area is unobstructed (clear). Per application requirements, a latch response requiring a manual reset to a power-up condition or after an interruption has cleared the defined area might be required. The latch function can be provided by interfacing the EZ-SCREEN LS OSSD outputs to the machine's safety-related control system, a safety controller (such as SC10-2roe or XS/SC26-2), or safety module (such as the UM-FA-9A/11A).

The system or device providing the latch/reset function must conform to the level of performance required by the risk assessment. In applications requiring Control Reliability and/or ISO 13849-1:2015 Categories 3 or 4 and PL d or e, it is recommended that a monitored manual reset (for example, open-closed-open action), such that a shorted or tied-down button cannot cause a reset, be used.

The reset switch must be mounted at a location that complies with the warning and guidelines below. If any hazardous areas are not in view from the switch location, additional means of safeguarding must be provided. The switch should be protected from accidental or unintended actuation (for example, through the use of rings or guards).

A key-actuated reset switch provides some operator or supervisory control, as the key can be removed from the switch and taken into the guarded area. However, this does not prevent unauthorized or inadvertent resets due to spare keys in the

© Banner Engineering Corp. All rights reserved.
www.bannerengineering.com

possession of others, or additional personnel entering the guarded area unnoticed. When considering where to locate the reset switch, follow the guidelines below.

WARNING:
- **Install reset switches properly**
- Failure to properly install reset switches could result in serious injury or death.
- Install reset switches so that they are accessible only from outside, and in full view of, the safeguarded space. Reset switches cannot be accessible from within the safeguarded space. Protect reset switches against unauthorized or inadvertent operation (for example, through the use of rings or guards). If there are any hazardous areas that are not visible from the reset switches, provide additional safeguarding.

All reset switches must be:
- Outside the guarded area
- Located to allow the switch operator a full, unobstructed, view of the entire guarded area while the reset is performed
- Out of reach from within the guarded area
- Protected against unauthorized or inadvertent operation (such as through the use of rings or guards)

IMPORTANT: Resetting a safeguard must not initiate hazardous motion. Safe work procedures require a start-up procedure to be followed and the individual performing the reset to verify that the entire hazardous area is clear of all personnel before each reset of the safeguard is performed. If any area cannot be observed from the reset switch location, additional supplemental safeguarding must be used: at a minimum, visual and audible warnings of machine start-up.

5.1.5 Adjacent Reflective Surfaces

WARNING:
- **Do not install the system near reflective surfaces**
- Reflective surfaces could reflect the sensing beam(s) around an object or person within the defined area, preventing detection by the system. Failure to prevent reflection problems results in incomplete guarding and an optical short circuit that could result in serious injury or death.
- Do not locate the defined area near a reflective surface. Perform the trip test, as described in the product documentation, to detect such reflection(s).

A reflective surface located adjacent to the defined area may deflect one or more beams around an object in the defined area. In the worst case, an optical short circuit may occur, allowing an object to pass undetected through the defined area.

This reflective surface may result from shiny surfaces or glossy paint on the machine, the workpiece, the work surface, the floor, or the walls. Beams deflected by reflective surfaces are discovered by performing the trip test and the periodic checkout procedures. To eliminate problem reflections:

- If possible, relocate the sensors to move the beams away from the reflective surface(s), being careful to maintain adequate separation distance
- Otherwise, if possible, paint, mask, or roughen the shiny surface to reduce its reflectivity
- Where these are not possible (as with a shiny workpiece or machine frame), determine the worst-case resolution resulting from the optical short circuit and use the corresponding depth penetration factor (Dpf or C) in the Safety Distance (Minimum Distance) formula; or mount the sensors in such a way that the receiver's field of view and/or the emitter's spread of light are restricted from the reflective surface
- Repeat the trip test (see "Perform a Trip Test" on page 52) to verify these changes have eliminated the problem reflection(s). If the workpiece is especially reflective and comes close to the defined area, perform the trip test with the workpiece in place

© Banner Engineering Corp. All rights reserved.
www.bannerengineering.com

Figure 15. Adjacent Reflective Surfaces

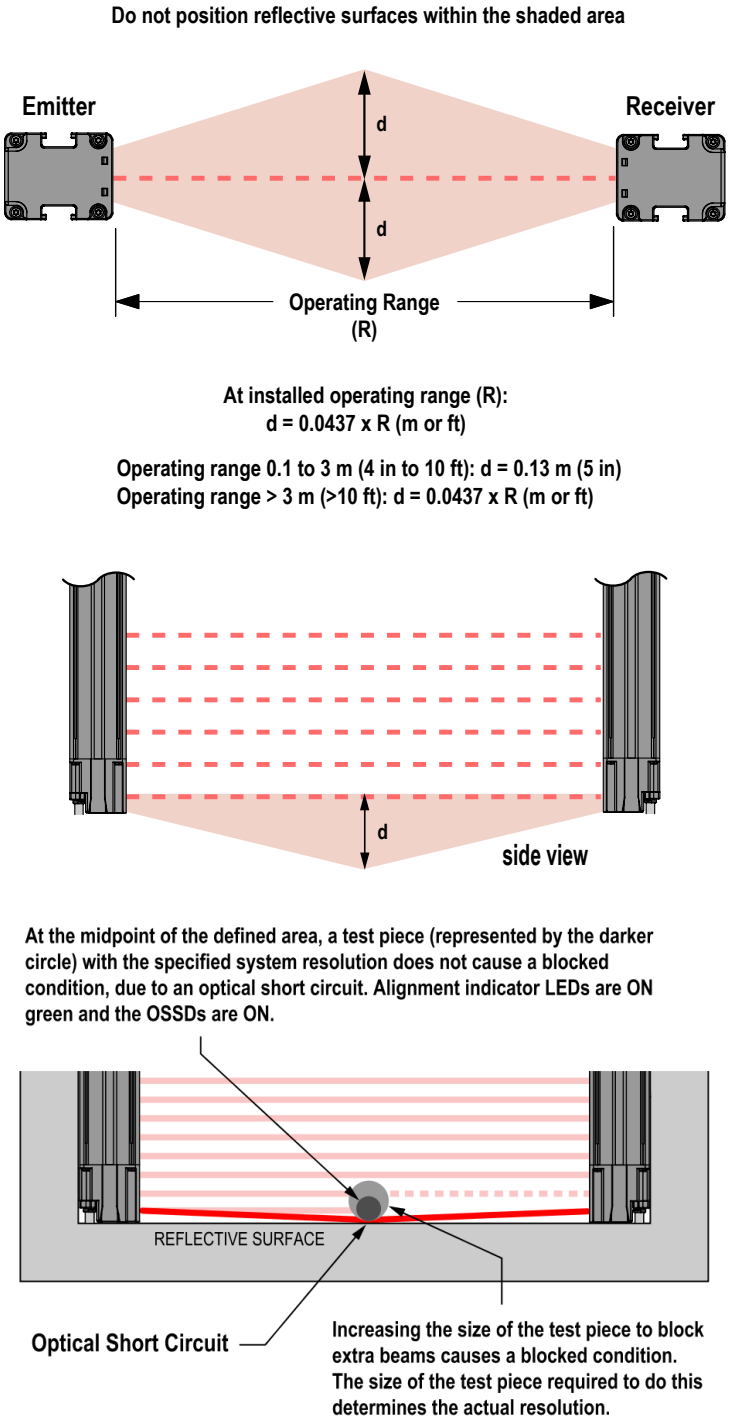

For 0.1 m to 3 m (4 in to 10 ft) Operating range: d = 0.13 m (5 in)

For Operating range > 3 m (> 10 ft): d = 0.0437 × R (m or ft)

At the midpoint of the defined area, a test piece (represented by the darker circle) with the specified system resolution does not cause a blocked condition due to an optical short circuit. Green Alignment indicator lights are On and the OSSDs are On. Increasing the size of the test piece to block additional beams causes a blocked condition. The size of the test piece required to do this determines the actual resolution. Use the table below to calculate Dpf or Factor "C" when a shiny surface causes an optical short circuit.

© Banner Engineering Corp. All rights reserved.
www.bannerengineering.com

Test Piece Model	Resolution	Depth Penetration Factor for U.S. Applications	Factor "C" for European Applications
STP-13	14 mm	24 mm (1 in)	0 mm
STP-2	19 mm	41 mm (1.6 in)	40 mm (1.6 in)
STP-16	25 mm	61 mm (2.5 in)	88 mm (3.5 in)
STP-14	30 mm	78 mm (3 in)	128 mm (5 in)
STP-4	32 mm	85 mm (3.3 in)	144 mm (5.7 in)
STP-17	34 mm	92 mm (3.6 in)	160 mm (6.3 in)
STP-1	38 mm	106 mm (4.2 in)	192 mm (7.6 in)
STP-3	45 mm	129 mm (5 in)	850 mm (33.5 in)
STP-8	51 mm	150 mm (5.9 in)	850 mm (33.5 in)
STP-5	58 mm	173 mm (6.8 in)	850 mm (33.5 in)
STP-15	60 mm	180 mm (7 in)	850 mm (33.5 in)
STP-12	62 mm	187 mm (7.4 in)	850 mm (33.5 in)

5.1.6 Use of Corner Mirrors

EZ-SCREEN LS may be used with one or more corner mirrors. Mirrors are not allowed for applications that would allow undetected personnel access into the safeguarded area. The use of glass-surface corner mirrors reduces the maximum specified emitter/receiver separation by approximately 8 percent per mirror, as follows:

Table 10. Light Curtain Maximum Range

Light Curtain Series	0 Mirrors	1 Mirror	2 Mirrors	3 Mirrors	4 Mirrors
SLC4 Safety Light Curtain	2 m (6.6 ft)	1.8 m (5.9 ft)	1.6 m (5.2 ft)	1.5 m (4.9 ft)	1.4 m (4.6 ft)
EZ-SCREEN® LP Basic (SLPVA)	4 m (13 ft)	3.7 m (12.1 ft)	3.4 m (11.2 ft)	3.1 ft m (10.3 ft)	2.8 m (9.2 ft)
14 mm EZ-SCREEN® (SLS)	6 m (20 ft)	5.6 m (18.4 ft)	5.2 m (17.0 ft)	4.8 m (15.7 ft)	4.4 m (14.5 ft)
EZ-SCREEN® LP (SLP)	7 m (23 ft)	6.5 m (21.2 ft)	6.0 m (19.5 ft)	5.5 m (18.0 ft)	5.1 m (16.6 ft)
EZ-SCREEN® LS Basic (SLLV)	8 m (26.2 ft)	7.4 m (24.3 ft)	6.8 m (22.3 ft)	6.2 m (20.3 ft)	5.7 m (18.7 ft)
EZ-SCREEN® LS (SLL)	12 m (39 ft)	11 m (36 ft)	10.1 m (33 ft)	9.3 m (30.5 ft)	8.6 m (28 ft)
S4B Safety Light Curtain	12 m (39 ft)	11 m (36 ft)	10.1 m (33 ft)	9.3 m (30.5 ft)	8.6 m (28 ft)
EZ-SCREEN® Type 2 (LS2)	15 m (50 ft)	13.8 m (45 ft)	12.7 m (42 ft)	11.7 m (38 ft)	10.8 m (35 ft)
30 mm EZ-SCREEN® (SLS)	18 m (60 ft)	16.8 m (55 ft)	15.5 m (51 ft)	14.3 m (47 ft)	13.1 m (43 ft)

See the specific mirror datasheet or www.bannerengineering.com for more information.

If mirrors are used, the difference between the angle of incidence from the emitter to the mirror and from the mirror to the receiver must be between 45° and 120° (see "Figure: Using EZ-SCREEN LS sensors in a retroreflective mode on page 36). If placed at a sharper angle, an object in the light screen may deflect beam(s) to the receiver, preventing the object from being detected, also know as false proxing. Angles greater than 120° result in difficult alignment and possible optical short circuits.

WARNING:

- **Retroreflective Mode Installation**
- Failure to follow these instructions may create unreliable sensing and may result in serious injury or death.
- Do not install emitters and receivers in retroreflective mode with less than a 45° angle of incidence. Install emitters and receivers at an appropriate angle.

© Banner Engineering Corp. All rights reserved.
www.bannerengineering.com

Figure 16. Using EZ-SCREEN LS sensors in a retroreflective mode

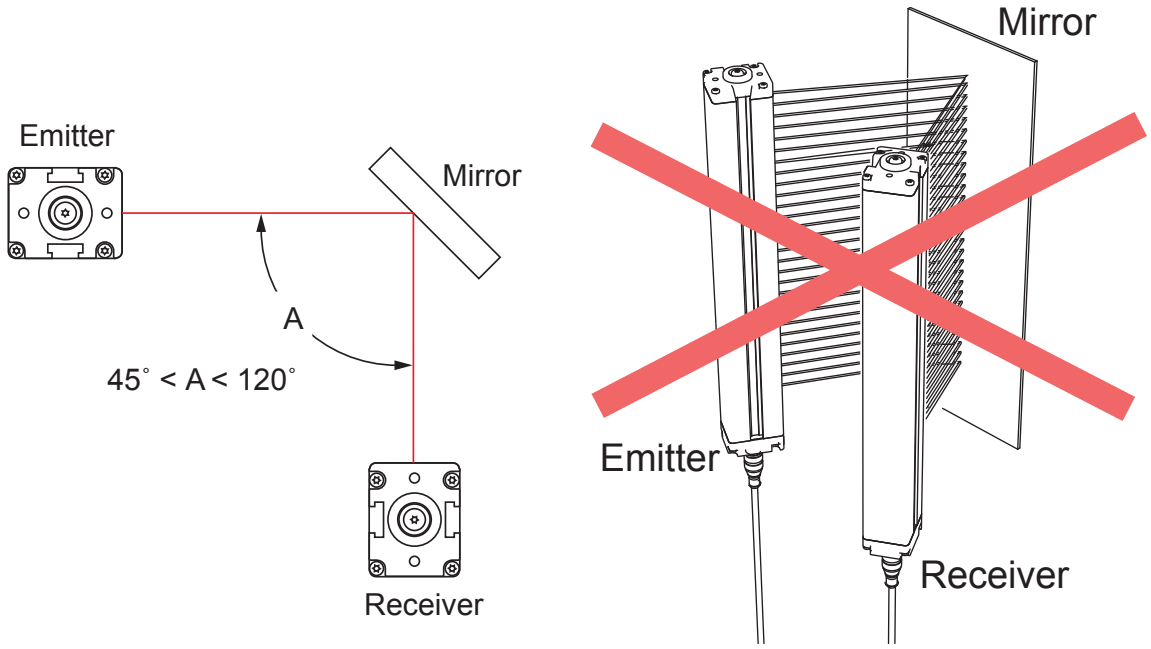

5.1.7 Emitter and Receiver Orientation

The emitter (light curtain) and receiver (light curtains) must be mounted parallel to each other and aligned in a common plane, with both machine interface cable ends pointing in the same direction.

Never mount the emitter with its machine interface cable end oriented in the opposite direction of the cable end of the receiver. If this occurs, voids in the light curtain may allow objects or personnel to pass through the defined area undetected.

The emitter and receiver may be oriented in a vertical or horizontal plane, or at any angle between horizontal and vertical, as long as they are parallel to each other and their cable ends point in the same direction. Verify that the light curtain completely covers all access to the hazard point that is not already protected by hard (fixed) guard or other supplemental guarding.

WARNING:

- **Properly install system components**
- Incorrectly orienting the system components impairs the performance of the system and results in incomplete guarding, which can result in serious injury or death.
- Install the system components with their corresponding cable ends pointing in the same direction.

Figure 17. Examples of Correct Emitter/Receiver Orientation

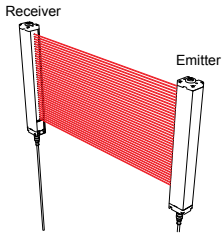

Both cable ends down

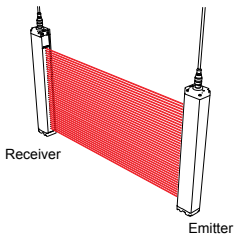

Both cable ends up

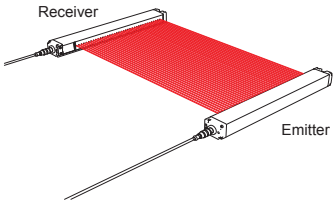

Orientation parallel to floor with both cable ends pointing in the same direction

© Banner Engineering Corp. All rights reserved.
www.bannerengineering.com

Figure 18. Examples of Incorrect Emitter/Receiver Orientation

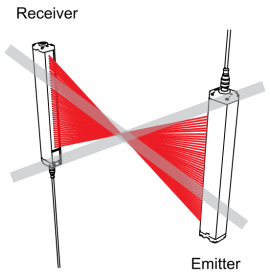

Cable ends point in opposite directions

Problem: Voids in defined area

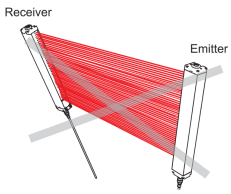

Emitter and receiver not parallel to each other

Problem: Reduced excess gain

5.1.8 Installation of Multiple Systems

Whenever two or more EZ-SCREEN LS emitter and receiver pairs are adjacent to one another, optical crosstalk may take place between the systems. To minimize optical crosstalk, alternate the positions of the emitters and receivers or alternate Scan Codes.

When three or more systems are installed in the same plane (as shown), optical crosstalk may occur between sensor pairs whose emitter and receiver lenses are oriented in the same direction. In this situation, eliminate optical crosstalk by mounting these sensor pairs exactly in line with each other within one plane or by adding a mechanical barrier between the pairs.

To further aid in avoiding crosstalk, the sensors feature two selectable scan codes. A receiver set to one scan code will not respond to an emitter set to another code.

Figure 19. Two systems installed in a horizontal plane

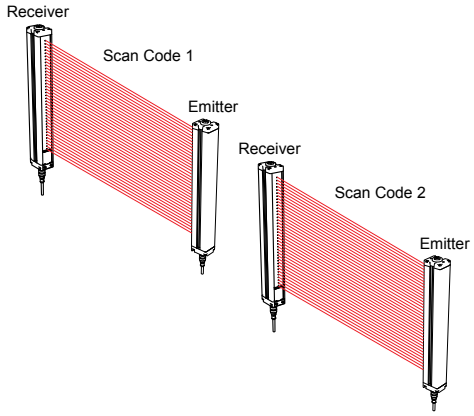

Figure 20. Two or three systems stacked (or alternate receiver/ emitter positions)

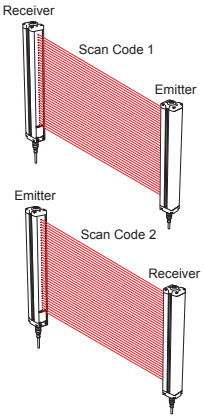

Continued on page 38

© Banner Engineering Corp. All rights reserved.
www.bannerengineering.com

Continued from page 37

Figure 21. Two systems installed at right angles

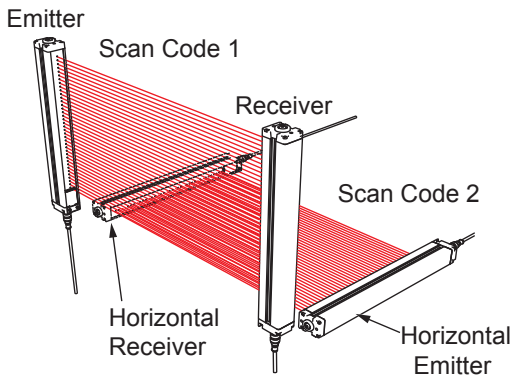

Figure 22. Multiple systems installed in a line

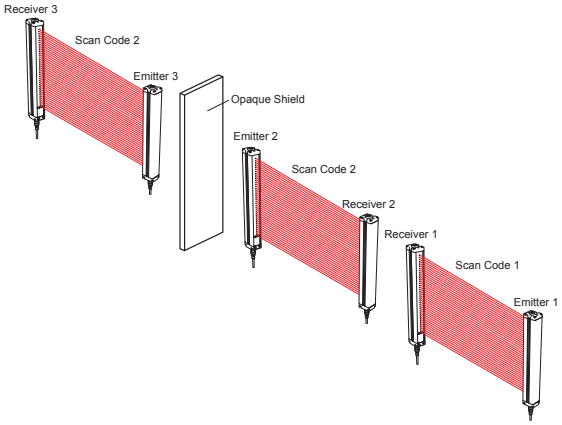

WARNING:

- **Properly connect multiple pairs of sensors**
- Connecting multiple output signal switching devices (OSSD) safety outputs to one interface module or otherwise parallel OSSD outputs can result in serious bodily injury or death, and is prohibited.
- Do not connect multiple pairs of sensors to a single device.

WARNING:

- **Use a scan code**
- If you do not use a scan code, a receiver can synchronize to the signal from the wrong emitter, reducing the safety function of the light curtain and creating an unsafe condition that could result in serious injury or death.
- Configure adjacent systems to use different scan codes (for example, set one system to use scan code 1 and the other system to use scan code 2). Perform a trip test to confirm the light curtain function.

5.2 Mounting System Components

5.2.1 Mounting Hardware

After the mechanical layout considerations are addressed, mount the sensors and route the cables.

Emitter/receiver pairs can be spaced from 0.1 m (4 in) to 12 m (39 ft) apart for lengths of 280 mm to 1820 mm or from 0.1 m (4 in) to 10 m (32.8 ft) apart for lengths of 1890 mm to 2380 mm. This distance is reduced if corner mirrors are used.

Each sensor ships with two EZLSA-MBK-11 end-mount brackets. Emitters and receivers 980 mm and longer also include one EZLSA-MBK-12 center-mount bracket. For models ending in -S, all mounting hardware is ordered separately. Emitters and receivers of 1890 mm to 2380 mm lengths require at least 2 EZLSA-MBK-12 center-mount brackets with the EZLSA-MBK-11 end-mount brackets.

The end-mount brackets allow ±23° rotation, can be mounted with flange out or flange in, and in 90° increments. EZLSA-MBK-12 center-mount brackets allow 30° rotation in one direction and 15° in the other. **Center- and side-mount brackets allow "no blind zone" mounting with minimal or no "gaps" in detection.**

The EZLSA-MBK-12[(3)] or optional EZLSA-MBK-16 side-mount bracket must be used with longer sensors if they are subject to shock or vibration. In such situations, the sensors are designed to be mounted with up to 910 mm unsupported distance

[(3)] Ordered separately for models ending in -S.

© Banner Engineering Corp. All rights reserved.
www.bannerengineering.com

(between brackets). Sensors 980 mm to 1820 mm in length require at least one center-mount bracket, while sensors in 1890 mm to 2380 mm lengths require at least two center-mount brackets.

5.2.2 Mounting the End-Mount Brackets

- See "Sensor Mounting and Mechanical Alignment" on page 41 for additional mounting recommendations.
- The machine interface connector ends of both sensors must point in the same direction.
- Two EZLSA-MBK-11 brackets may be supplied[4] with each emitter and receiver, depending on the model. Additional EZLSA-MBK-12 center-mount bracket(s) may be required (see "Mounting the Center- and Side-Mount Brackets" on page 40).
- Loosely mount the brackets to the desired surface using the supplied bolts and nuts, or user-supplied hardware. (Use the M5 hardware to mount the brackets to the light curtain; use the M6 hardware to mount the brackets to the machine.)
- Brackets are designed to mount directly to MSA Series stands using the hardware supplied with the stands.
- Brackets may face in (shown on bottom) or out (shown on top), as desired.
- See "Optional Mounting Brackets" on page 94 for mounting bracket dimensions.

Figure 23. End-Mount Brackets

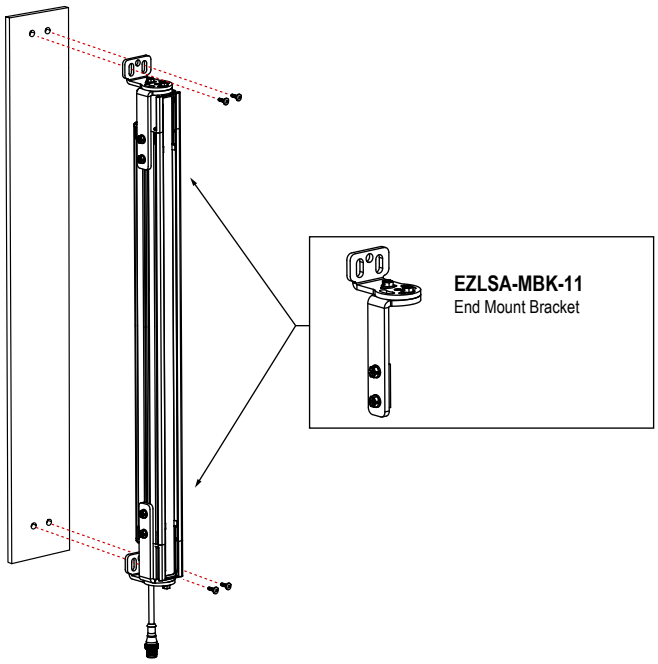

1. From a common point of reference (ensuring the calculated minimum safety distance), measure to position the emitter and receiver in the same plane, with their midpoints directly opposite each other, and locate and drill mounting holes if necessary.
2. Slide the end-mount bracket onto the side mounting channels and tighten the channel screws.
3. Position the emitter and receiver, and attach the flange to the mounting holes.
4. Verify that the sensor windows directly face each other by rotating the sensor(s), then tighten the bracket screws.
5. Measure from a reference plane, for example, a level building floor, to the same point(s) on the emitter and receiver to verify their mechanical alignment. Use a carpenter's level, a plumb bob, or the optional LAT-1 Laser Alignment Tool (see "Alignment Aids" on page 96) or check the diagonal distances between the sensors, to achieve mechanical alignment. See "Sensor Mounting and Mechanical Alignment" on page 41.
6. Temporarily tighten all fasteners that allow for adjustment. Final alignment procedures are explained in "Initial Checkout Procedure" on page 47.

[4] Ordered separately for models ending in -S.

© Banner Engineering Corp. All rights reserved.
www.bannerengineering.com

5.2.3 Mounting the Center- and Side-Mount Brackets

Figure 24. Mounting the center- and side-mount brackets

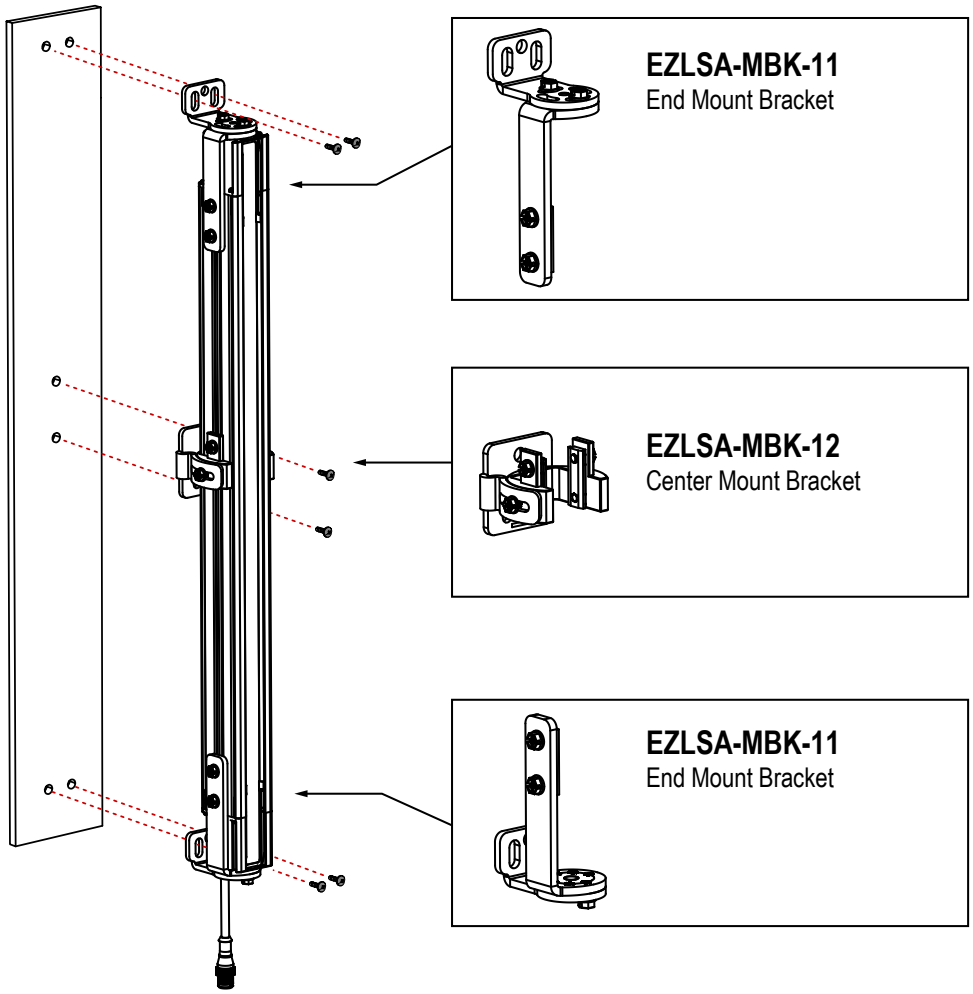

- See "Sensor Mounting and Mechanical Alignment" on page 41 for additional mounting recommendations.
- The machine interface connector ends of both sensors must point in the same direction.
- Emitters and Receivers 980 mm and longer may include an EZLSA-MBK-12 center-mount bracket[5] for center support, depending on the model.
- The sensors are designed to be mounted with up to 910 mm of unsupported distance between brackets when they are subject to shock or vibration.
- Loosely mount the brackets to the desired surface using the supplied M5 bolts and nuts, or user-supplied hardware.
- See "Optional Mounting Brackets" on page 94 for mounting bracket dimensions.

1. From a common point of reference (ensuring the calculated minimum safety distance), measure to locate the emitter and receiver in the same plane, with their midpoints directly opposite each other, and locate and drill mounting holes if necessary.
2. Attach the mounting flange of the EZLSA-MBK-12 to the mounting holes (back-mount only).
3. Remove the channel nuts from the EZLSA-MBK-12 clamp and slide them into the side mounting channel. A small piece of adhesive tape can be use to temporarily location the nuts within the channel.
4. Position the emitter and receiver and re-assemble the clamp to the channel nuts. Tighten when the sensor is properly located.
5. Rotate sensor(s) so that the windows directly face each other. Tighten the screw.
6. Measure from a reference plane, for example, a level building floor, to the same point(s) on the emitter and receiver to verify their mechanical alignment. Use a carpenter's level, a plumb bob, or the optional LAT-1 Laser Alignment Tool

[5] Ordered separately for models ending in -S.

© Banner Engineering Corp. All rights reserved.
www.bannerengineering.com

(see "Alignment Aids" on page 96) or check the diagonal distances between the sensors, to achieve mechanical alignment.

7. Temporarily tighten all fasteners that allow for adjustment. Final alignment procedures are explained in "Initial Checkout Procedure" on page 47.

5.2.4 Optional EZLSA-MBK-16 Side-Mount Bracket

The EZLSA-MBK-16 provides a mounting option that is adjustable (lateral and +15/-20° rotational) from the face of the sensor and allows "no blind zone" mounting with minimal or no "gaps" in detection. The bracket can be mounted to a surface on the back or the side of the sensor (not typically to be used in conjugation with EZLSA-MBK-11 end-mount bracket).

Figure 25. Optional Side-Mount Bracket

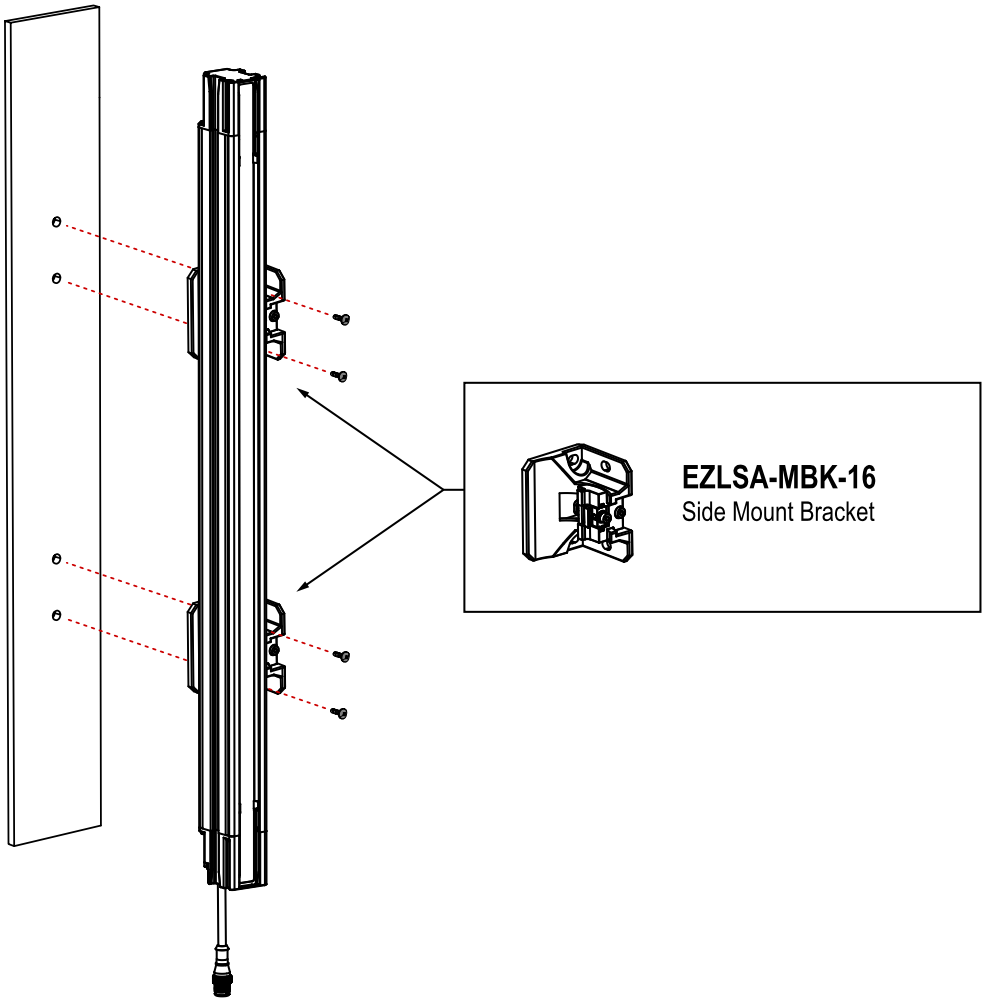

- See "Mounting the Center- and Side-Mount Brackets" on page 40 for the general mounting procedure.
- See "Sensor Mounting and Mechanical Alignment" on page 41 for additional mounting recommendations.
- The machine interface connector ends of both sensors must point in the same direction.
- The sensors are designed to be mounted with up to 910 mm of unsupported distance between brackets when they are subject to shock or vibration.
- See "Optional Mounting Brackets" on page 94 for mounting bracket dimensions and the installation guide.

5.2.5 Sensor Mounting and Mechanical Alignment

Verify that:

- The emitter (light curtain) and receiver (light curtains) are directly opposite each other
- Nothing is interrupting the defined area
- The defined area is the same distance from a common reference plane for each sensor
- The emitter and receiver are in the same plane and are level/plumb and square to each other (vertical, horizontal, or inclined at the same angle, and not tilted front-to-back or side-to-side)

© Banner Engineering Corp. All rights reserved.
www.bannerengineering.com

Figure 26. Incorrect Sensor Alignment

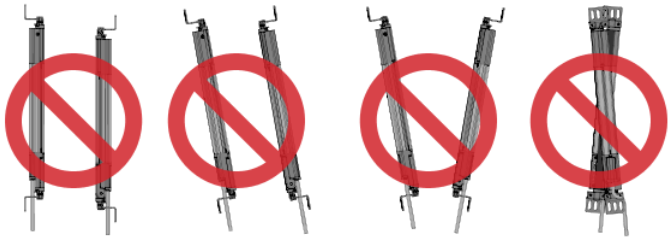

Angled or Horizontal Installations – verify that:

- Distance X at the emitter and receiver are equal
- Distance Y at the emitter and receiver are equal
- Distance Z at the emitter and receiver are equal from parallel surfaces
- Vertical face (the window) is level/plumb
- Defined area is square. Check diagonal measurements if possible. See Vertical Installations.

Figure 27. For angled or horizontal installations

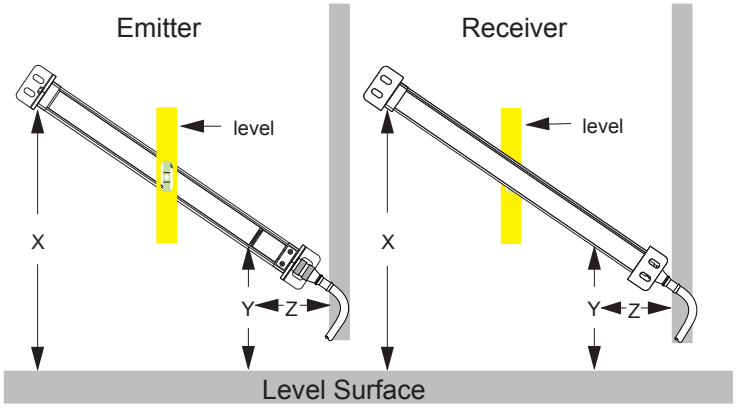

Vertical Installations – verify that:

- Distance X at the emitter and receiver are equal
- Both sensors are level/plumb (check both the side and face)
- Defined area is square. Check diagonal measurements if possible (Diagonal A = Diagonal B).

Figure 28. For vertical installations

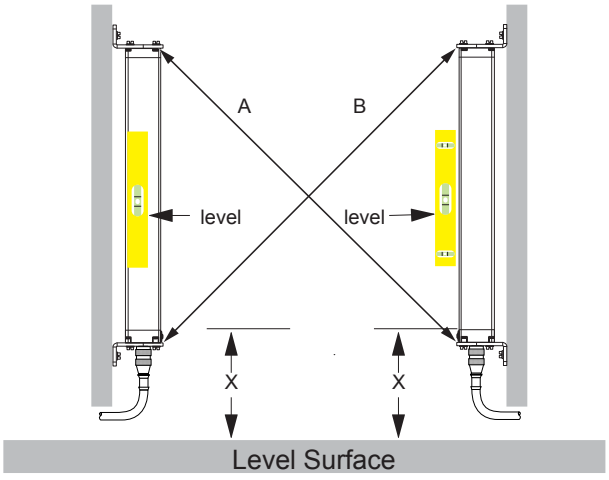

© Banner Engineering Corp. All rights reserved.
www.bannerengineering.com

5.2.6 Mounting Dimensions

All measurements are listed in millimeters [inches], unless noted otherwise. The measurements provided are subject to change. See "Dimensions" on page 26 for EZ-SCREEN LS dimensions with and without brackets installed. See Side Bracket Mounting for additional information about mounting the EZLSA-MBK-16 brackets.

End-Mount Brackets	Dimensions
Figure 29. EZLSA-MBK-11 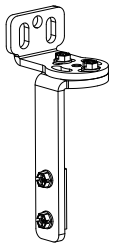	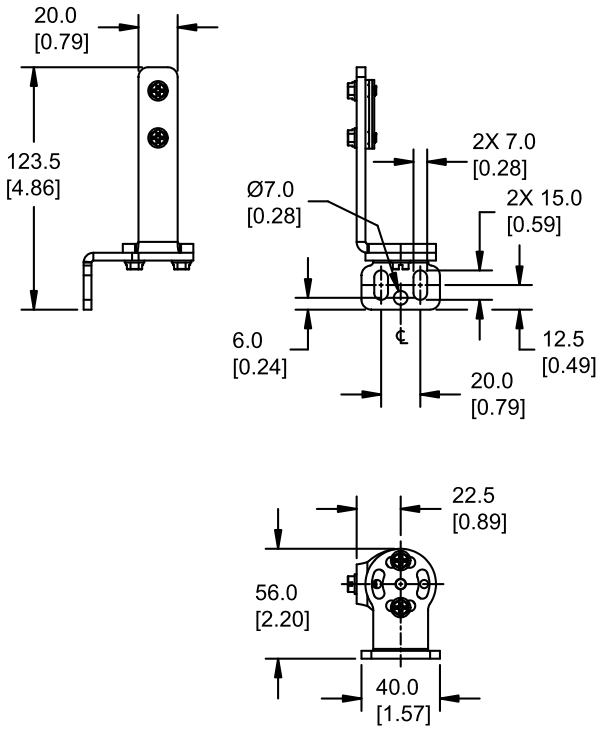

© Banner Engineering Corp. All rights reserved.
www.bannerengineering.com

Center-Mount Brackets	Dimensions
Figure 30. EZLSA-MBK-12 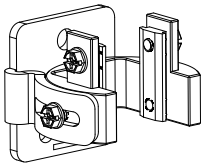	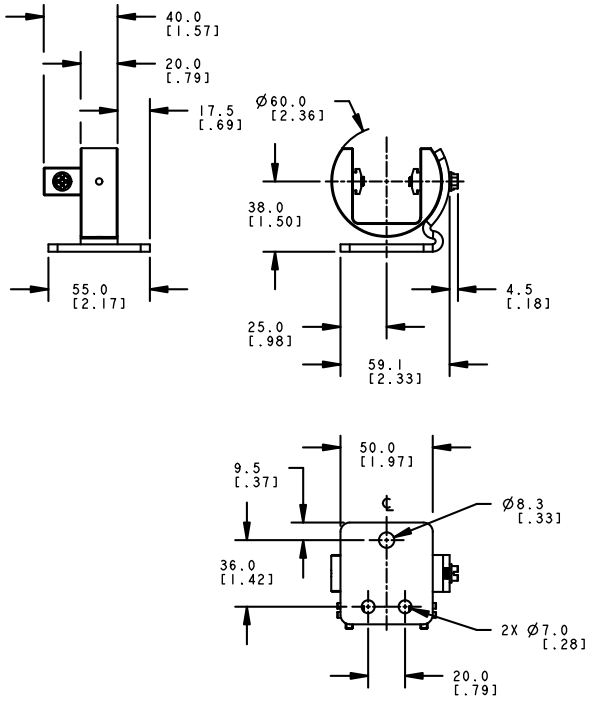

Side-Mount Brackets	Dimensions
Figure 31. EZLSA-MBK-16 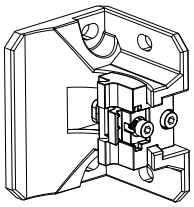	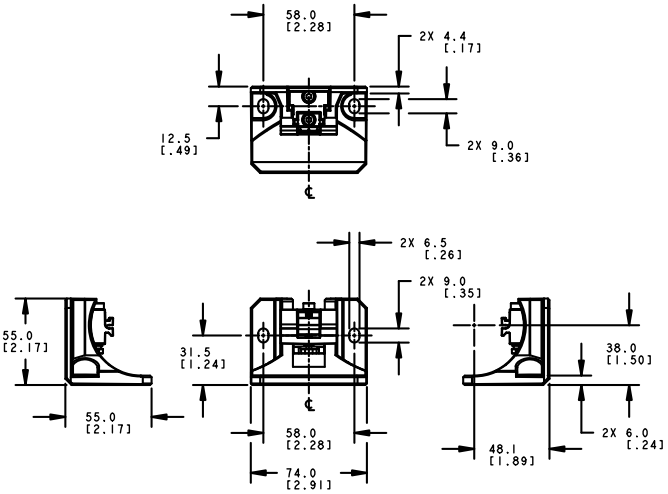

© Banner Engineering Corp. All rights reserved.
www.bannerengineering.com

Chapter Contents

6.1 Routing Cordsets 45
6.2 Initial Electrical Connections 46
6.3 Initial Checkout Procedure 47
6.4 Electrical Connections to the Guarded Machine 53
6.5 Wiring Diagrams 58

Chapter 6 Electrical Installation and Testing

WARNING:

- **Read this Section Carefully Before Installing the System**
- **Failure to follow these instructions could result in serious injury or death.**
- If all mounting, installation, interfacing, and checkout procedures are not followed properly, this Banner Engineering Corp. device cannot provide the protection for which it was designed.
- The user is responsible for ensuring that all local, state, and national laws, rules, codes, or regulations relating to the installation and use of this control system in any particular application are satisfied. Ensure that all legal requirements have been met and that all technical installation and maintenance instructions contained in this manual are followed.
- The user has the sole responsibility to ensure that this Banner Engineering Corp. device is installed and interfaced to the guarded machine by Qualified Persons, in accordance with this manual and applicable safety regulations. A Qualified person is a person who, by possession of a recognized degree or certificate of professional training, or who, by extensive knowledge, training and experience, has successfully demonstrated the ability to solve problems relating to the subject matter and work.

The following are the main steps to electrically install the EZ-SCREEN LS components and interface with the guarded machine:

1. Routing cordsets and making initial electrical connections (see "Routing Cordsets" on page 45 and "Initial Electrical Connections" on page 46).
2. Apply power to each emitter/receiver pair (see "Initial Electrical Connections" on page 46).
3. Perform an Initial Checkout Procedure (see "Initial Checkout Procedure" on page 47).
4. Make all electrical interface connections to the guarded machine (see "Electrical Connections to the Guarded Machine" on page 53).
5. Perform a commissioning checkout procedure (see "Commissioning Checkout" on page 69).

6.1 Routing Cordsets

Attach the required cordsets to the sensors, and route the sensor cables to the junction box, electrical panel, or other enclosure in which the interface module, the redundant mechanically linked interposing relays, FSDs, or other safety-related parts of the control system are located. This must be done per local wiring code for low-voltage dc control cables and may require installation of electrical conduit. See "Cordsets" on page 87 for selection of Banner supplied cables.

EZ-SCREEN LS is designed and manufactured to be highly resistant to electrical noise and to operate reliably in industrial settings. However, extreme electrical noise may cause a random Trip condition; in extreme cases, a Lockout is possible.

Emitter and receiver wiring is low voltage; routing the sensor wires alongside power wires, motor/servo wires, or other high voltage wiring may inject noise into the EZ-SCREEN LS System. It is good wiring practice, and sometimes may be required by code, to isolate emitter and receiver cables from high-voltage wires, avoid routing cables close to “noisy” wiring, and provide a good connection to earth ground.

Sensor cabling and any interconnect wiring should have an insulation temperature rating of at least 90 °C (194 °F).

Installation/Replacement of RD Cordsets— To remove the Removable Disconnect (RD) cordset, unscrew the two Phillips screws and carefully pull the connector straight back. To install an RD Cordset:

1. Slide the RD connector firmly into housing's RD port. (Ensure rectangular gasket is installed.)
2. Tighten the Phillips screws to 2.6 in/lbs at base of connector to lock into place. Do not over tighten.

© Banner Engineering Corp. All rights reserved.
www.bannerengineering.com

NOTE: The machine interface cable (e.g. RDLS-8xxD, DELSE-8xxD) must connect to the sensor end adjacent to the indicators and serial number label for the system to operate properly.

Table 11. Maximum machine interface cable length versus total load current (OSSDs)

Maximum Machine Interface Cordset Length					
EZ-SCREEN LS Receivers in Cascade	Total Load Current (OSSD 1 + OSSD 2)				
	0.1 A	0.25 A	0.5 A	0.75 A	1.0 A
1	95.7 m (314 ft)	78 m (256 ft)	54.9 m (180 ft)	42.1 m (138 ft)	34.1 m (112 ft)
2 [6]	45.7 m (150 ft)	38.1 m (125 ft)	28.9 m (98 ft)	24.7 m (81 ft)	20.7 m (68 ft)
3 [7]	25.3 m (83 ft)	22.3 m (73 ft)	18.6 m (61 ft)	15.8 m (52 ft)	13.7 m (45 ft)
4 [8]	20.1 m (66 ft)	18.3 m (60 ft)	15.5 m (51 ft)	13.7 m (45 ft)	12.2 m (40 ft)

NOTE: Emitter and receiver power (current) requirements are accounted for. The above values represent additional current draw that must be accounted for because of the load current.

NOTE: Maximum cordset lengths are intended to ensure that adequate power is available to the EZ-SCREEN LS when the supply is operating at +20 V dc. Values in the previous table are worse case. Contact banner Engineering if there are any questions.

NOTE: The length of Emitter machine interface cordsets can be two times longer than those listed for the receiver in the table above if a CSB Splitter cordset is not used. If a CSB Splitter cordset is used, connect one branch of the CSB splitter to the receiver and other branch to the emitter via DEE2R double-ended cordset up to the same length listed in the table above.

6.2 Initial Electrical Connections

WARNING:

- **Risk of electric shock**
- Use extreme caution to avoid electrical shock. Serious injury or death could result.
- Always disconnect power from the safety system (for example, device, module, interfacing, etc.), guarded machine, and/or the machine being controlled before making any connections or replacing any component. Lockout/tagout procedures might be required. Refer to OSHA 29CFR1910.147, ANSI Z244-1, or the applicable standard for controlling hazardous energy.
- Make no more connections to the device or system than are described in this manual. Electrical installation and wiring must be made by a Qualified Person[9] and must comply with the applicable electrical standards and wiring codes, such as the NEC (National Electrical Code), NFPA 79, or IEC 60204-1, and all applicable local standards and codes.

Lockout/tagout procedures may be required (refer to OSHA1910.147, ANSI Z244-1, ISO 14118, or the appropriate standard for controlling hazardous energy). Following relevant electrical standards and wiring codes, such as the NEC, NFPA79 or IEC60204-1, always connect the earth ground (green/yellow wire). **Do not operate the EZ-SCREEN LS without an earth ground connection.**

Make the electrical connections in the order described in this section. Do not remove end-caps; no internal connections are to be made. All connections are made through the RD or pigtail QD connections.

Emitter Cordset

EZ-SCREEN LS emitters have either a 5-pin or 8-pin cordset, but not all conductors are used. The other wires are in place to allow a parallel connection (color-for-color) to the receiver cable, providing sensor interchangeability (or “swapability”); either sensor may be installed at either cordset connection. In addition to providing similar cabling, this wiring scheme is advantageous during installation, wiring, and troubleshooting.

[6] Assumes a 50 ft L2 cascade cable.
[7] Assumes 26.2 ft L2 and L3 cascade cables.
[8] Assumes L2 and L4 are 1 ft and L3 is 50 ft.
[9] A person who, by possession of a recognized degree or certificate of professional training, or who, by extensive knowledge, training and experience, has successfully demonstrated the ability to solve problems relating to the subject matter and work.

© Banner Engineering Corp. All rights reserved.

Receiver Cordset—5-pin

Do not connect any wires to the machine control circuits (OSSD outputs) at this time.

Receiver Cordset—8-pin

Do not connect any wires to the machine control circuits (OSSD outputs) at this time. For the initial power-up and checkout, External Device Monitoring (EDM) must be configured/wired (see "External Device Monitoring" on page 56), the Scan Code must be selected (see "Scan Code Select" on page 57), and the Fault Output can be connected (see "Fault Output" on page 21). Take precautions to prevent unused wires from shorting to ground or to other sources of energy (for example, terminate with a wire-nut). Final OSSD wiring must be completed later.

6.3 Initial Checkout Procedure

The initial checkout procedure must be performed by a Qualified Person. It must be performed only after configuring the System and after connecting the components.

Perform this procedure to:

- Ensure proper installation when the System is first installed
- Ensure proper System function whenever any maintenance or modification is performed on the System or on the machinery that is guarded by the System.

6.3.1 Configuring the System for Initial Checkout

For the initial checkout, the EZ-SCREEN LS System must be checked without power available to the guarded machine. Final interface connections to the guarded machine cannot take place until the light curtain system has been checked out. This may require lockout/tagout procedures (refer to OSHA1910.147, ANSI Z244-1, ISO 14118, or the appropriate standard for controlling hazardous energy). The OSSD connections will be made after the initial checkout procedure has been successfully completed.

Verify that:

- Power has been removed from (or is not available to) the guarded machine and its controls or actuators
- The machine control circuit or the Safety/Interface Module is not connected to the OSSD outputs at this time (permanent connections will be made later)
- EDM is configured and wired per application requirements (1-channel or no monitoring, see "External Device Monitoring" on page 56)

6.3.2 Initial Power-Up

1. Inspect the area near the light screen for reflective surfaces, including work pieces and the guarded machine. Reflective surfaces may cause light beams to reflect around a person in the light screen, preventing the person from being detected and not stopping the machine motion (see "Adjacent Reflective Surfaces" on page 33).
2. Eliminate the reflective surfaces as much as possible by relocating, painting, masking, or roughening them. Remaining problem reflections will become apparent during the trip test.
3. **Verify that power is removed** from the EZ-SCREEN LS Safety Light Curtain System and from the guarded machine and that the OSSD safety outputs are not connected.
4. Remove all obstructions from the light screen.
5. With the power to the guarded machine Off, make external device monitoring (EDM), power, and earth ground connections on both the emitter and receiver cables (see "Wiring Diagrams" on page 58). The +24 V DC (brown wire) and 0 V DC (blue wire) should be connected to a SELV-rated supply and GND (green/yellow wire) to earth ground. If the installation does not allow direct connection to earth ground via the cordset, the earth ground must be provided via the mounting brackets.
6. Power up the EZ-SCREEN LS Safety Light Curtain System only.
7. Verify that the input power is present to both the emitter and the receiver. At least one indicator on both the emitter and the receiver should be On and the start-up sequence should cycle.
8. Watch both the emitter and the receiver Status indicators and the receiver Alignment indicators to determine the light screen alignment status:
    - **An Emitter Lockout Condition**—the emitter Status indicator is single-flashing red; the receiver Status indicator is solid red, and the receiver's 7-segment display reads **CH1**.
    - **A Receiver Lockout Condition**—the receiver Status indicator is single-flashing red, with Alignment and Run mode indicators Off, and the receiver 7-segment display shows an Error Code.
    - **Normal Operating Mode (emitter)**—the Status indicator is solid green.
    - **Clear (Run) Condition (receiver)**—the Status indicator is solid green, and the Run mode indicator is solid amber. All Alignment indicators are solid green.

© Banner Engineering Corp. All rights reserved.
www.bannerengineering.com

- **A Blocked Condition (receiver)**—The Status indicator is solid red, Run mode indicator is solid amber, one or more Alignment indicator(s) are solid red, identifying the location of the blocked beams, and the number of blocked beams is displayed.

NOTE: If beam 1 is blocked, the Alignment indicator 1 will be red and all others Off. Beam 1 provides the synchronization signal.

9. Proceed to "Optical Alignment" on page 48.

6.3.3 Optical Alignment

WARNING:
- **Hazard exposure**
- Failure to follow these instructions could result in serious injury or death.
- Verify that no individuals are exposed to any hazard if the output signal switching device (OSSD) outputs turn on when the emitter and receiver become aligned.

Verify the optimal alignment, adjusting the sensor rotation with the power on:

1. Verify that the emitter and the receiver are pointed squarely at each other. Use a straight edge (for example, a level) to determine the direction the sensor is facing. The sensor face must be perpendicular to the optical axis.

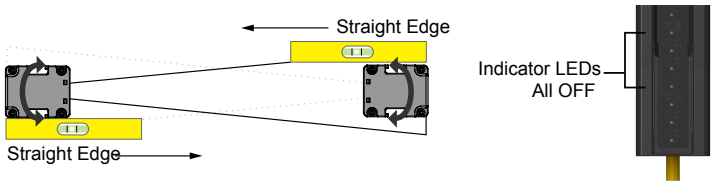

NOTE: At power-up, all indicators are tested (flash), then the Scan Code is displayed.

2. Turn on the power to the emitter and receiver. If the Channel #1 beam is not aligned, the Status and Alignment indicator 1 will be red, the Run mode indicator will be off, and the 7-segment display sequentially indicates **CH1**. All the Alignment indicators (2-n) will be off.

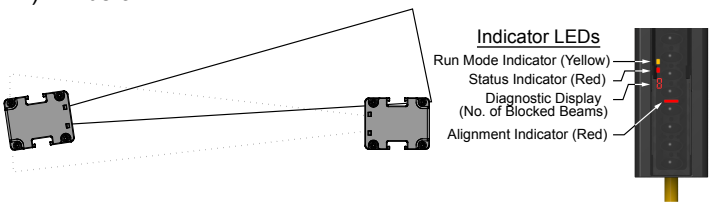

3. If the green Status and amber Run mode indicators are on, go to the next step. If not, rotate each sensor (one at a time) left and right until the green Status indicator is on. (As the sensor rotates out of alignment, the red Status indicator turns on). As more beams are aligned, the Alignment indicators turn from red to green and the number of blocked beam indicators decreases.

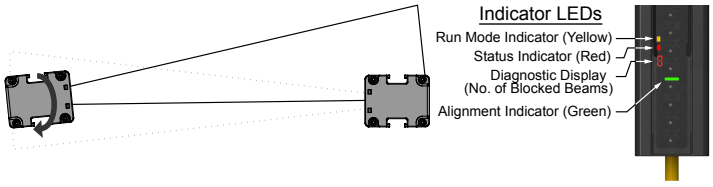

4. To optimize alignment and maximize excess gain, slightly loosen the sensor mounting screws and rotate one sensor left and right, noting the positions in each arc where the Status indicators turn red (blocked condition); repeat with the other sensor. Center each sensor between those two positions and tighten the mounting screws, making sure to maintain the positioning as the screws are tightened.

© Banner Engineering Corp. All rights reserved.
www.bannerengineering.com

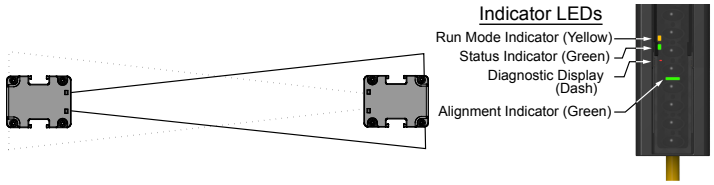

For situations where alignment is difficult, a LAT-1-SS Laser Alignment Tool can be used to assist or confirm alignment by providing a visible red dot along the sensor's optical axis (see "Alignment Aids" on page 96).

NOTE: If at any time the red Status indicator begins to flash steadily, the System has entered a Lockout condition. See "Troubleshooting" on page 72 for further information.

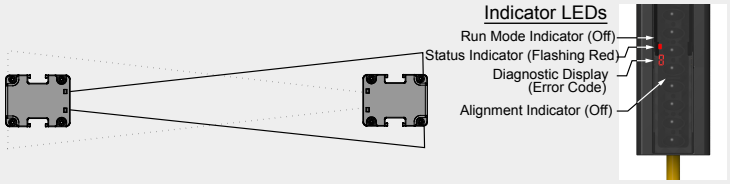

6.3.4 Optical Alignment Procedure with Mirrors

EZ-SCREEN LS sensors may be used with one or more corner mirrors for guarding more than one side of an area. The SSM rear-surface glass mirrors are rated at 85% efficiency. Thus, excess gain and sensing range are reduced when using mirrors; see "Use of Corner Mirrors" on page 35.

During any adjustments, allow only one individual to adjust any one item at any one time. In addition to the standard optical alignment procedure, verify:

1. The emitter, receiver, and all mirrors are level and plumb.
2. The middle of the defined area and the center point of the mirrors are approximately the same distance from a common reference point, such as the same height above a level floor.
3. There are equal amounts of mirror surface above and below the defined area such that the optical beams are not passing below or above the mirror.

NOTE: An LAT-1 Laser Alignment Tool is very helpful by providing a visible red dot along the optical axis. See "Alignment Aids" on page 96, "Figure: Optical alignment using the LAT-1 on page 49, and Banner Safety Applications Note SA104 (p/n 57477) for more information.

Figure 32. Optical alignment using the LAT-1

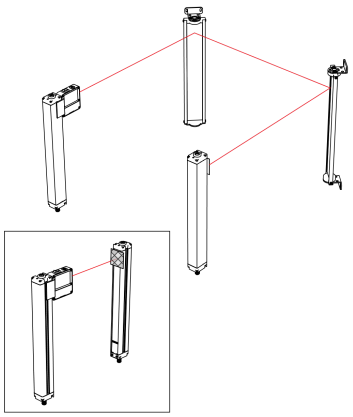

Figure 33. Corner Mirror Alignment

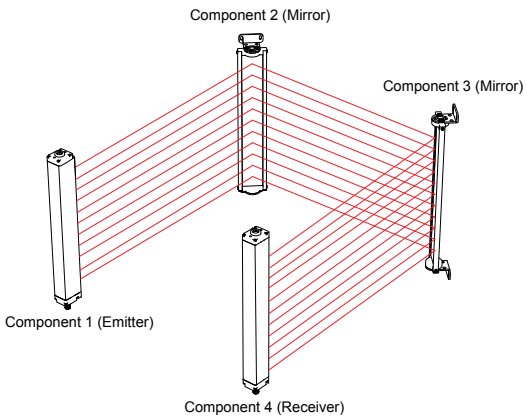

© Banner Engineering Corp. All rights reserved.
www.bannerengineering.com

6.3.5 Remote Fixed Blanking

On cascade models, fixed blanking is available to, in effect, disable beams that would otherwise be continually blocked by a stationary object. One or multiple areas within an EZ-SCREEN LS sensor pair may be blanked out, with a minimum of one beam between two blanked areas.

The first sensing beam (CH1 synchronization beam) at the display end of sensor must remain clear (cannot be blanked); any other beam may be blanked. All beams of a fixed blanked area must remain blocked during operation for the OSSDs to remain ON.

The Remote Fixed Blanking feature can be used on an EZ-SCREEN LS cascade receiver as a stand-alone system or in a cascaded system. A DELSEF-81D cordset used with a EZA-RBK-1 Remote Blanking Key Switch or a RDLS-8..D cordset with a user-supplied switch and indicator provides a convenient means to program the blanked area. (See "Remote TEACH Fixed Blanking (Wiring)" on page 85.)

The remote programming is effective on all receivers in the cascaded systems (for example, multiple areas can be blanked on different sensor pairs). After programming, the DELSEF-81D cordset and EZA-RBK-1 Remote Blanking Key Switch can be removed (with power OFF) and replaced by the terminator plug, an EZ-LIGHT (integral or remotely mounted), or an Emergency Stop/Interlocking switch via a RDLS-8..D cordset.

Programming Key Switch Location

The EZA-RBK-1 or an SPDT (Form C) switch is required to perform the remote programming procedure, as shown. A key-actuated switch provides some supervisory control since the key can be removed from the switch.

The Programming Key Switch must be:

- Located outside the guarded area
- Located to allow the switch operator full unobstructed view of the entire defined area
- Protected against unauthorized or inadvertent operation

WARNING: Use of Fixed Blanking.
Use Fixed Blanking only when necessary. Any holes created in the defined area either must be completely filled by the blanked object or the safety (minimum) distance must be increased to account for the larger resolution (see "Calculating the Safety Distance (Minimum Distance)" on page 28).

Figure 34. EZA-RBK-1 switch positions and programming status indications.

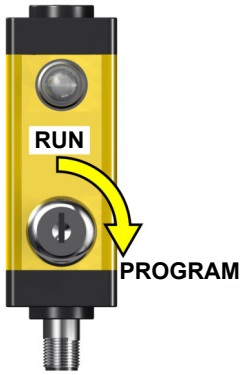

Indicator Status	Programming Status
Amber/yellow on	Programming in process
Amber/yellow flashing	Programming complete
Off	Run mode

Remote Fixed Blanking Programming Procedures

Prior to performing these procedures, install the EZ-SCREEN LS per "Mechanical Installation" on page 28 of this document. Align the emitter/receiver pair and perform all required checkout procedures to ensure proper operation. Ensure that the EZA-RBK-1 programming key switch is rotated to the counter-clockwise Run position at power-up and normal operation.

© Banner Engineering Corp. All rights reserved.
www.bannerengineering.com

IMPORTANT:

1. The first sensing beam (CH1 synchronization beam) at the display end of the sensor must remain clear during normal operation.
2. The number and location of blocked beams is indicated by the receiver's 7-segment display and the alignment indicators. If the configuration is reliable, this number should not change.

Initial programming—no fixed blanking previously programmed, perform the following: The following procedures must be completed within 10 minutes or a lockout occurs (Error Code 12 displays).

Action		Indication	Comments
1	Locate the obstruction in the defined area and secure it.	**EZA-RBK-1 LED:** OFF **Receiver:** number and location of blocked beams is indicated by the 7-segment display and the alignment indicators.	The number of blocked beams should not change if all beams to be blanked are reliably obstructed. If the number changes, some beams may be partially or intermittently blocked, which may cause a lockout condition during operation.
2	Turn the programming key switch to the Program position (clockwise) momentarily (> 0.25 second) and then return to the Run position.	**EZA-RBK-1 LED:** ON (key in Program position), then slowly flashes for approximately 5 seconds after the key returns to the Run position. **Receiver:** displays "P" and the number of blocked beams. Then displays "P" "F" "C" after the key returns to the Run position.	This teaches and saves the new fixed blanking configuration.
3	**Trip Output:** the OSSDs turn ON.	**EZA-RBK-1 LED:** OFF **Receiver:** display indicates normal operation with flashing alignment indicator(s) corresponding to the location of the blocked beams.	The system is ready for the Trip Test, see "Perform a Trip Test" on page 52.

Further programming with the power on—To change (relocate) or clear (remove) previous fixed blanking, perform the following steps: The following procedures must be completed within 10 minutes or a lockout will occur (Error Code 12 displays).

Action		Indication	Comments
1	Place the programming key switch in the Program position (clockwise) until step 3.	**EZA-RBK-1 LED:** ON **Receiver:** sequences between "P" and the number of blocked beams.	EZA-RBK-1 indicator steady ON indicates program mode.
2	Locate or relocate the obstruction (for example, tooling, fixturing, etc.) in the defined area and secure. If clearing the fixed blanked area, remove all obstructions.	**EZA-RBK-1 LED:** ON **Receiver:** sequences between "P" and the number of blocked beams.	If an Error code 12 occurs (programming time out), go to step 6 below (do not return the programming key switch to the Run position at this time).
3	Return the programming key switch to the Run position (counter-clockwise).	**EZA-RBK-1 LED:** slowly flashes, approximately 5 seconds **Receiver:** display indicates "P" "F" "C"	This saves the new fixed blanking configuration.
4	**Trip Output:** The OSSDs turn ON.	**EZA-RBK-1 LED:** OFF **Receiver:** display indicates normal operation if fixed blanking is removed. Otherwise displays normal operation with flashing alignment indicator(s) corresponding to the location of the blanked beams.	The system is ready for the Trip Test, see "Perform a Trip Test" on page 52.

To change (relocate) or clear (remove) previous fixed blanking, when:

- Obstruction is relocated or cleared with EZ-SCREEN LS power OFF.
- Clearing an Error Code 10 "Fixed Blanking Error"
- Clearing an Error Code 12 "Timeout Expired" (begin at step 6, with the programming key switch in the Program position)

© Banner Engineering Corp. All rights reserved.
www.bannerengineering.com

	Action	Indication	Comments
1	Remove power from EZ-SCREEN LS.		
2	Locate or relocate the obstruction (for example, tooling, fixturing, etc.) in the defined area and secure it, or if clearing the fixed blanked area, remove all obstructions.		
3	Block the first sensing beam (CH1 synchronization beam) at the display end of the sensor until step #6.		
4	Ensure that the programming key switch is in the Run position and reapply power to the EZ-SCREEN LS system.	**EZA-RBK-1 LED:** rapid flashing, and then OFF **Receiver:** Power-up Test Sequence, scan code ("C" and "1" or "2"), and then "C" "H" "1" (repeats)	All LEDs turn on momentarily during the Power-up Display Test Sequence.
5	Place the programming key switch in the Program position (clockwise).	**EZA-RBK-1 LED:** ON **Receiver:** displays sequences "C" "H" "1" (repeats) and then "P" "0" (repeats)	The timer resets to 10 minutes.
6	Clear the first sensing beam (CH1 synchronization beam) at the display end of the sensor.	**EZA-RBK-1:** ON **Receiver:** display sequences between “P” and the number of blocked beams	Adjustments to the position of the fixed blanked object can be made within the 10-minute programming time limit.
7	Return the programming key switch to the Run position (counterclockwise).	**EZA-RBK-1 LED:** slowly flashes for approximately 5 seconds **Receiver:** display indicates “P” “F” “C”	This saves the new fixed blanking configuration.
8	**Trip Output:** the OSSDs turn ON.	**EZA-RBK-1 LED:** OFF **Receiver:** display indicates normal operation if fixed blanking is removed. Otherwise, displays normal operation with flashing alignment indicator(s) corresponding to the location of the blanked beams.	The system is ready for the Trip Test, see "Perform a Trip Test" on page 52.

6.3.6 Perform a Trip Test

After optimizing the optical alignment and configuring fixed blanking (if applicable), perform the trip test to verify the detection capability of the EZ-SCREEN LS System. This test also verifies correct sensor orientation and identifies optical short circuits. After the installation has passed the trip test, the safety outputs may be connected and the commissioning checkout may be performed (initial installations only).

1. Select the proper test piece supplied with the receiver.
   - 14 mm resolution models: 14 mm (0.55 in) dia. Model STP-13
   - 23 mm resolution models: 23 mm (0.91 in) dia. Model STP-19
   - 40 mm resolution models : 40 mm (1.57 in) dia. Model STP-20
2. Verify that the System is in Run mode, the Green Status indicator is On, all Alignment indicators are green, and the amber Status indicator is On.
3. Pass the specified test piece through the defined area in three paths: near the emitter, near the receiver, and midway between the emitter and receiver.

Figure 35. Trip Test

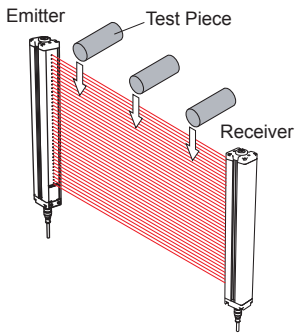

© Banner Engineering Corp. All rights reserved.
www.bannerengineering.com

4. During each pass, while the test piece is interrupting the defined area, **at least one Alignment indicator must be Red. The Red Alignment indicator must change with the position of the test piece within the defined area.**
   If all Alignment indicators turn green or fail to follow the position of the test piece while it is within the defined area, the installation has failed the trip test. Check for correct sensor orientation and reflective surfaces.

   When the test piece is removed from the defined area, in trip output operation, the green Status indicator must turn on .

   WARNING:
   - **Trip test failure**
   - Using a system that has failed a trip test can result in serious bodily injury or death. If the trip test has failed, the system might not stop dangerous machine motion when a person or object enters the sensing field.
   - Do not attempt to use the system if the system does not respond properly to the trip test.

5. If mirrors are used in the application: Test the defined area on each leg of the sensing path (for example, emitter to mirror, between mirror and receiver).

   Figure 36. Trip Test with Corner Mirror

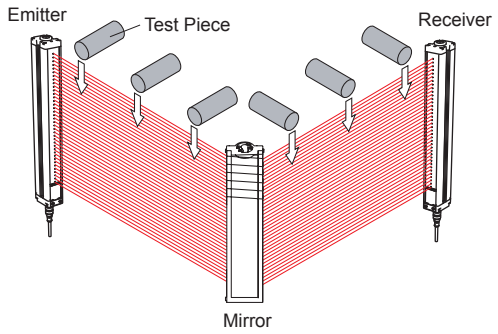

6. If the EZ-SCREEN LS System passes all checks during the trip test, go on to "Electrical Connections to the Guarded Machine" on page 53.

6.4 Electrical Connections to the Guarded Machine

Verify that power has been removed from the EZ-SCREEN LS and the guarded machine. Make the permanent electrical connections as described in "OSSD Output Connections" on page 54 and "Final Switching Devices (FSD) Interfacing Connections" on page 54 as required by each individual application.

Lockout/tagout procedures may be required (refer to OSHA 1910.147, ANSI Z244-1, ISO 14118, or the appropriate standard for controlling hazardous energy). Follow relevant electrical standards and wiring codes, such as the NEC, NFPA79 or IEC 60204-1.

Supply power and external device monitoring (EDM) should already be connected. The EZ-SCREEN LS must also have been aligned and passed the Initial Checkout, as described in "Initial Checkout Procedure" on page 47.

The final connections to be made or verified are:

- OSSD outputs (see "OSSD Output Connections" on page 54)
- FSD interfacing (see "Final Switching Devices (FSD) Interfacing Connections" on page 54)
- MPCE/EDM (see "Machine Primary Control Elements and EDM Input" on page 55)
- Fault Output (see "Fault Output" on page 21)
- Scan Code Select (see "Scan Code Select" on page 57)

© Banner Engineering Corp. All rights reserved.
www.bannerengineering.com

WARNING:
- **Risk of electric shock**
- Use extreme caution to avoid electrical shock. Serious injury or death could result.
- Always disconnect power from the safety system (for example, device, module, interfacing, etc.), guarded machine, and/or the machine being controlled before making any connections or replacing any component. Lockout/tagout procedures might be required. Refer to OSHA 29CFR1910.147, ANSI Z244-1, or the applicable standard for controlling hazardous energy.
- Make no more connections to the device or system than are described in this manual. Electrical installation and wiring must be made by a Qualified Person[10] and must comply with the applicable electrical standards and wiring codes, such as the NEC (National Electrical Code), NFPA 79, or IEC 60204-1, and all applicable local standards and codes.

6.4.1 OSSD Output Connections

Refer to the output specifications in the "Specifications" on page 24 and these warnings before making OSSD output connections and interfacing the EZ-SCREEN LS to the machine.

WARNING:
- **Interfacing both output signal switching devices (OSSD)**
- Failure to follow these instructions could result in serious injury or death.
- Unless the same degree of safety is maintained, never wire an intermediate device(s) (PLC, PES, PC) between the safety module outputs and the master stop control element it switches such that a failure causes a loss of the safety stop command or the failure allows the safety function to be suspended, overridden, or defeated.
- Connect both OSSD outputs to the machine control so that the machine's safety-related control system interrupts the circuit to the machine primary control element(s), resulting in a non-hazardous condition.

WARNING:
- **OSSD Interfacing**
- Failure to properly interface the OSSD Outputs to the guarded machine could result in serious injury or death.
- To ensure proper operation, the Banner device output parameters and machine input parameters must be considered when interfacing the Banner device OSSD outputs to machine inputs. Design machine control circuitry so that all of the following are true:

  The maximum load resistance value is not exceeded.
  The maximum specified OSSD OFF-state voltage does not result in an ON condition.

6.4.2 Final Switching Devices (FSD) Interfacing Connections

The final switching device(s) (FSDs) take many forms. The most common are forced-guided devices, mechanically linked relays, or interface modules. The mechanical linkage between the contacts allows the device to be monitored by the external device monitoring (EDM) circuit for certain failures.

Depending on the application, the use of FSDs can facilitate controlling voltage and current that differs from the output signal switching device (OSSD) outputs of the EZ-SCREEN LS. FSDs can also be used to control an additional number of hazards by creating multiple safety stop circuits.

Protective Stop (Safety Stop) Circuits

A protective stop (safety stop) allows for an orderly cessation of motion for safeguarding purposes, which results in a stop of motion and removal of power from the MPCEs (assuming this does not create additional hazards).

A protective stop circuit typically comprises a minimum of two normally open contacts from forced-guided, mechanically linked relays, which are monitored through external device monitoring (EDM) to detect certain failures to prevent the loss of the safety function. Such a circuit can be described as a "safe switching point". Typically, protective stop circuits are either single-channel, which is a series connection of at least two normally open contacts; or dual-channel, which is a separate

[10] A person who, by possession of a recognized degree or certificate of professional training, or who, by extensive knowledge, training and experience, has successfully demonstrated the ability to solve problems relating to the subject matter and work.

© Banner Engineering Corp. All rights reserved.

connection of two normally open contacts. In either method, the safety function relies on the use of redundant contacts to control a single hazard. If one contact fails On, the second contact arrests the hazards and prevents the next cycle from occurring. See "Generic Wiring Diagram—8-pin Receiver and Redundant FSDs" on page 62.

The interfacing of the protective stop circuits must be accomplished so that the safety function cannot be suspended, overridden, or defeated unless accomplished in a manner of the same or greater degree of safety as the machine's safety-related control system that includes the EZ-SCREEN LS.

The normally open safety outputs from an interface module provide a series connection of redundant contacts that form protective stop circuits for use in either single-channel or dual-channel control. See "Generic Wiring Diagram—8-pin Receiver and Redundant FSDs" on page 62.

Dual-Channel Control

Dual-channel control provides the ability to electrically extend the safe switching point beyond the FSD contacts.

With proper monitoring, this method of interfacing is capable of detecting certain failures in the control wiring between the safety stop circuit and the MPCEs. These failures include a short-circuit of one channel to a secondary source of energy or voltage, or a loss of the switching ability of one of the FSD outputs. Such failures may lead to a loss of redundancy, or to a complete loss of safety, if not detected and corrected.

The possibility of a failure to the wiring increases as the physical distance between the FSD safety stop circuits and the MPCEs increases, as the length or the routing of the interconnecting wires increases, or if the FSD safety stop circuits and the MPCEs are located in different enclosures. For this reason, dual-channel control with external device monitoring (EDM) should be used in any installation where the final switching device(s) (FSDs) are located remotely from the machine primary control element(s) (MPCEs).

Single-Channel Control

Single-channel control uses a series connection of final switching device contacts to form a safe switching point.

After this point in the machine's safety-related control system, failures can occur that would result in a loss of the safety function (such as a short-circuit to a secondary source of energy or voltage). For this reason, single-channel control interfacing should be used only in installations where final switching device (FSD) safety stop circuits and the machine primary control element(s) (MPCEs) are mounted within the same control panel, adjacent to each other, and are directly connected to each other; or where the possibility of such a failure can be excluded. If this cannot be achieved, then dual-channel control should be used.

Methods to exclude the possibility of these failures include, but are not limited to:

- Physically separating interconnecting control wires from each other and from secondary sources of power
- Routing interconnecting control wires in separate conduit, runs, or channels
- Locating all elements (modules, switches, and devices under control) within one control panel, adjacent to each other, and directly connected with short wires
- Properly installing multi-conductor cabling and multiple wires through strain relief fittings. Over-tightening of a strain-relief device can cause short circuits at that point.
- Using positive-opening or direct-drive components, installed and mounted in a positive mode

6.4.3 Machine Primary Control Elements and EDM Input

A machine primary control element (MPCE) is an electrically powered element that directly controls the normal operation of a machine in such a way that it is the last element (in time) to function when machine operation is to be initiated or arrested (per IEC 61496-1). Examples include motor contactors, clutch/brakes, valves, and solenoids.

Depending on the level of risk of harm, it may be required to provide redundant MPCEs or other control devices that are capable of immediately stopping the dangerous machine motion, irrespective of the state of the other. These two machine control channels need not be identical (diverse redundant), but the stop time performance of the machine (Ts, used to calculate the safety distance, see "Calculating the Safety Distance (Minimum Distance)" on page 28) must take into account the slower of the two channels. Consult the machine manufacturer for additional information.

To ensure that an accumulation of failures does not compromise the redundant control scheme (cause a failure to danger), a method to verify the normal functioning of MPCEs or other control devices is required. EZ-SCREEN LS provides a convenient method for this verification: external device monitoring (EDM).

For the EZ-SCREEN LS external device monitoring to function properly, each device must include a normally closed, forced-guided (mechanically linked) contact that can accurately reflect the status of the device. This ensures that the normally open contacts, used for controlling hazardous motion, have a positive relationship with the normally closed monitoring contacts and can detect a failure to danger (for example, contacts that are welded closed or stuck On).

© Banner Engineering Corp. All rights reserved.
www.bannerengineering.com

It is strongly recommended that a normally closed, forced-guided monitoring contact of each final switching device (FSD) and MPCE be connected in series with the EDM input (see "Generic Wiring Diagram—8-pin Receiver and Redundant FSDs" on page 62). If this is done, proper operation will be verified. Monitoring FSD and MPCE contacts is one method of maintaining control reliability (OSHA/ANSI) and Category 3 and 4 (ISO 13849-1).

If monitoring contacts are not available or do not meet the design requirement of being forced-guided (mechanically linked), it is recommended you:

- Replace the devices so that they are capable of being monitored; or
- Incorporate the EDM function into the circuit as close to the MPCE as possible (for example, monitor the FSDs); and
- Employ the use of well-tried, tested, and robust components, and generally accepted safety principles, including fault exclusion, into the design and installation to either eliminate, or reduce to an acceptable (minimal) level of risk, the possibility of undetected faults or failures that can result in the loss of the safety function.

The principle of fault exclusion allows the designer to design out the possibility of various failures and justify it through the risk assessment process to meet the required level of safety performance, such as the requirements of Category 2, 3, or 4. See ISO 13849-1/-2 for further information.

WARNING:

- **External Device Monitoring (EDM)**
- Creating a hazardous situation could result in serious injury or death.
- If the system is configured for “no monitoring,” it is the user’s responsibility to ensure this does not create a hazardous situation.

6.4.4 External Device Monitoring

EZ-SCREEN LS Safety Light Curtain provides two possible EDM configurations: one-channel monitoring and no monitoring. Their functions are described below. The most common form of EDM is one-channel monitoring; its primary advantage is the simplicity of wiring. The installation must prevent short circuits across the normally closed monitoring contacts and to secondary sources of power.

Figure 37. One-channel EDM status, with respect to safety output

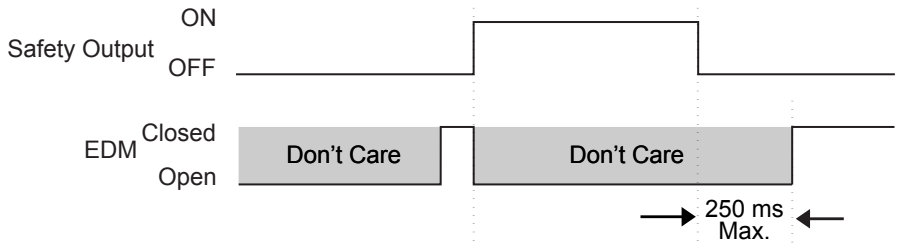

External Device Monitoring Wiring

If not connected previously, it is again strongly recommended that one normally closed, forced-guided monitoring contact of each FSD and MPCE be wired as shown in the monitoring circuit (see "Generic Wiring Diagram—8-pin Receiver and IM-T-9A Interface Module" on page 63). Pin 3 of the receiver connector provides a connection for the external device monitoring input.

External device monitoring (EDM) must be wired in one of two configurations described below.

One-Channel Monitoring: This is a series connection of normally closed monitor contacts that are force-guided (mechanically linked) from each device controlled by the EZ-SCREEN LS. The monitor contacts must be closed before the EZ-SCREEN LS OSSDs can turn On. After the safety outputs (OSSDs) turn On, the status of the monitor contacts are no longer monitored and may change state. However, the monitor contacts must be closed within 250 milliseconds of the OSSD outputs going from On to Off.

Refer to "Generic Wiring Diagram—8-pin Receiver and IM-T-9A Interface Module" on page 63 for wiring. Connect the monitor contacts between +24 V DC and EDM (pin 3).

© Banner Engineering Corp. All rights reserved.
www.bannerengineering.com

No Monitoring: Use this configuration to perform the initial checkout; see "Initial Checkout Procedure" on page 47. If the application does not require the EDM function, it is the user's responsibility to ensure that this configuration does not create a hazardous situation.

To configure the EZ-SCREEN LS Safety Light Curtain for no monitoring, connect EDM (pin 3) to +24 V DC.

WARNING: Retrofit of two-channel EDM Installations—In existing installations using two-channel external device monitoring (default setting of EZ-SCREEN and EZ-SCREEN LP systems), **the parallel wiring of the normally closed monitoring contacts must be rewired for the series connection used for one-channel EDM**. If the required wiring changes are not made, the device connected to pin 2 (Orn/Blk) will not be monitored and could result in undetected faults and create an unsafe condition, which could result in serious bodily injury or death. **If there are any questions concerning retrofit installations, contact Banner Engineering.**

6.4.5 Fault Output

The current sourcing (PNP) solid-state output (70 mA maximum) is used for control functions that are not safety related; a typical use is to signal a lockout (fault) to a programmable logic controller (PLC). Available on both the receiver and emitter, the output provides a fault signal (lockout = On). Interrupting (blocking) the sensing field is not considered a lockout, so the Fault Output does not change state.

This feature is available only when an 8-conductor interface is used.

6.4.6 Scan Code Select

Emitter and receiver models interfaced with 8 conductor cables may be configured to one of two Scan Codes (1 or 2). A receiver recognizes light only from an emitter with the same scan code. The scan code is configured at power-up and remains set until the input is changed and power is cycled.

- Select Scan Code 1 by connecting pin 8 (violet wire) to 0 V DC or leaving it open (not connected). Prevent unused wires from shorting to ground or to other sources of energy (for example, terminate with wire-nut).
- Select Scan Code 2 by connecting pin 8 (violet wire) to +24 V DC.

Both the emitter and its corresponding receiver must have the same setting. Emitter and receiver models interfaced with 5-conductor cables are always configured for Scan Code 1.

6.4.7 Preparing for System Operation

After the initial trip test has been accomplished, and the OSSD safety outputs and EDM connections have been made to the machine to be controlled, the EZ-SCREEN LS is ready for testing in combination with the guarded machine.

The operation of the EZ-SCREEN LS with the guarded machine must be verified before the combined System and machine may be put into service. To do this, a Qualified Person must perform the Commissioning Checkout Procedure (see "Commissioning Checkout" on page 69).

6.4.8 Sensor Interchangeability

The figures and table below illustrate a wiring option that provides sensor interchangeability (or swapability)—the ability to install either sensor at either QD connection.

The resulting installation provides the ability to swap the emitter and receiver position. This wiring option provides advantages during installation, wiring, and troubleshooting.

To use this option, connect all emitter wires in parallel (color-for-color) to the receiver cable via individual wires or the CSB.. splitter cordset (can be used with only emitters and receivers with similar connectors, such as a pair with 8-pin quick disconnects or a pair with 5-pin quick disconnects.).

Model CSB.. splitter cordsets and DEE2R.. double-ended cordsets allow easy interconnection between an EZ-SCREEN LS receiver and emitter, providing a single homerun cordset.

© Banner Engineering Corp. All rights reserved.
www.bannerengineering.com

Figure 38. Individual cordsets

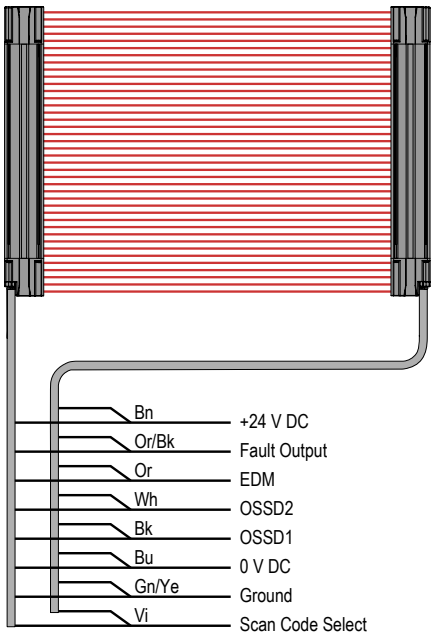

Figure 39. Splitter cordsets

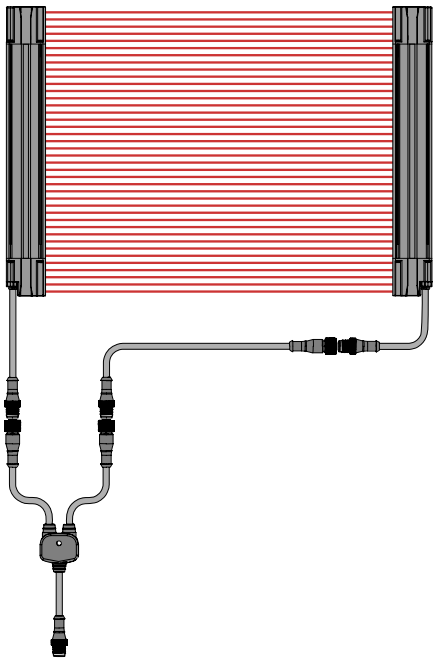

6.5 Wiring Diagrams

6.5.1 Reference Wiring Diagrams

Other interfacing modules and solutions are available, see "Accessories" on page 87 and www.bannerengineering.com.

NOTE: For interfacing modules or remotely located safety I/O blocks where pin 5 of a 5-pin M12 QD is not earth ground, a 4-pin cordset where pin 5 is not physically present or is not electrically connected can be used (such as MQDEC-406SS double-ended cordset). In such situations, earth ground must be provided via the mounting brackets.

6.5.2 Generic Wiring Diagram—5-pin and 8-pin Emitter

Figure 40. Generic Wiring Diagram—Emitter

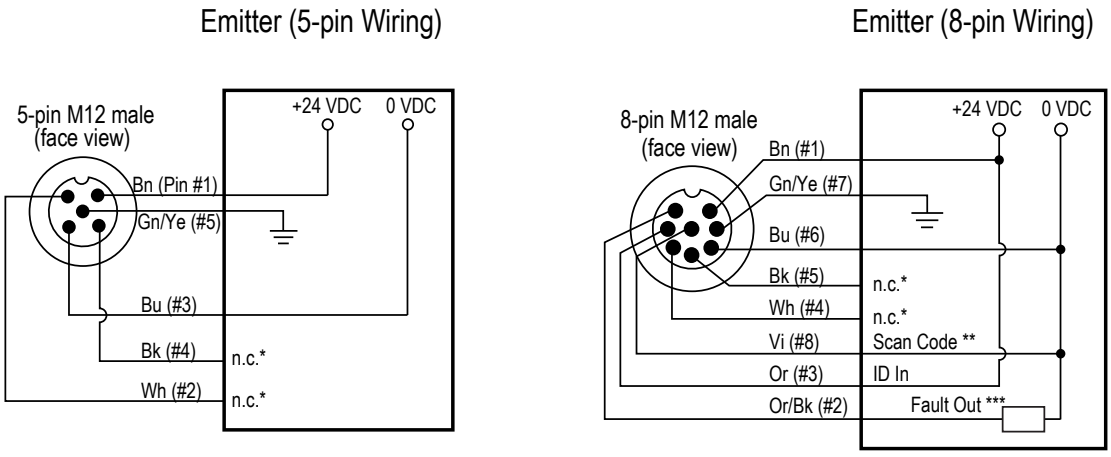

* All pins shown as no connection (n.c.) are either not connected or are paralleled to same color wire from the receiver cable.

© Banner Engineering Corp. All rights reserved.
www.bannerengineering.com

** Scan Code 1: Not connected or connected to 0 V DC (as shown). Scan Code 2: connect to 24 V DC.

*** Fault Out: Not connected or connect indicator (70 mA maximum) to 0 V DC (as shown).

6.5.3 Generic Wiring Diagram—5-pin Receiver and UM-FA-..A Safety Module

Figure 41. Generic Wiring Diagram - UM-FA..A with Auto Reset

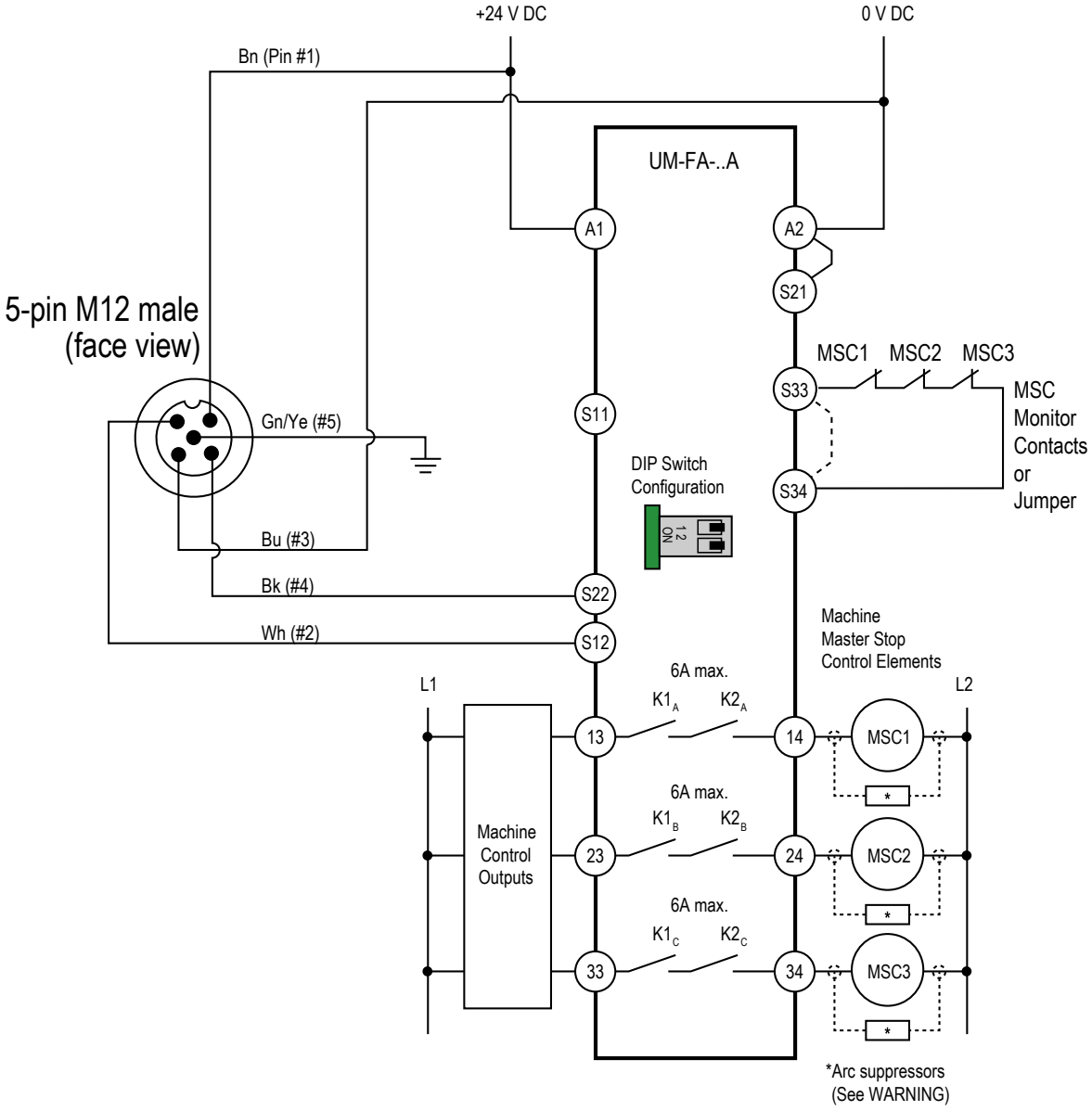

© Banner Engineering Corp. All rights reserved.
www.bannerengineering.com

Figure 42. Generic Wiring Diagram - UM-FA..A with Manual Reset

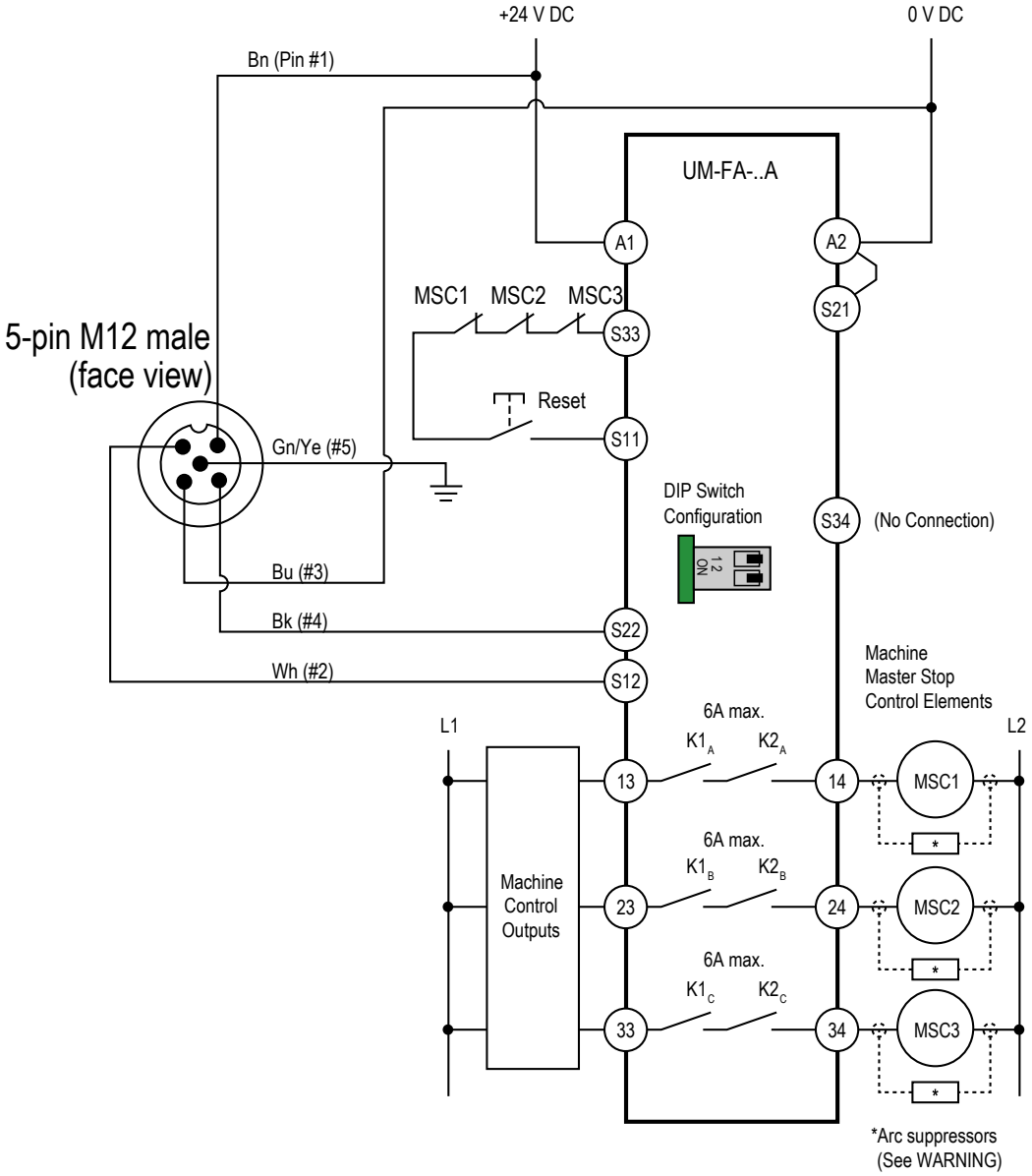

NOTE: See **UM-FA-..A** module datasheet (p/n 141249) for complete installation instructions.

WARNING:

- **Properly install arc or transient suppressors**
- Failure to follow these instructions could result in serious injury or death.
- Install any suppressors as shown across the coils of the machine primary control elements. Do not install suppressors directly across the output contacts of the safety or interface module. In such a configuration, it is possible for suppressors to fail as a short circuit.

© Banner Engineering Corp. All rights reserved.
www.bannerengineering.com

6.5.4 Generic Wiring Diagram—5-pin Receiver and Safety Module/ Controller or Safety PLC/PES

Figure 43. Generic Wiring Diagram—XS/SC26-2 Safety Controller

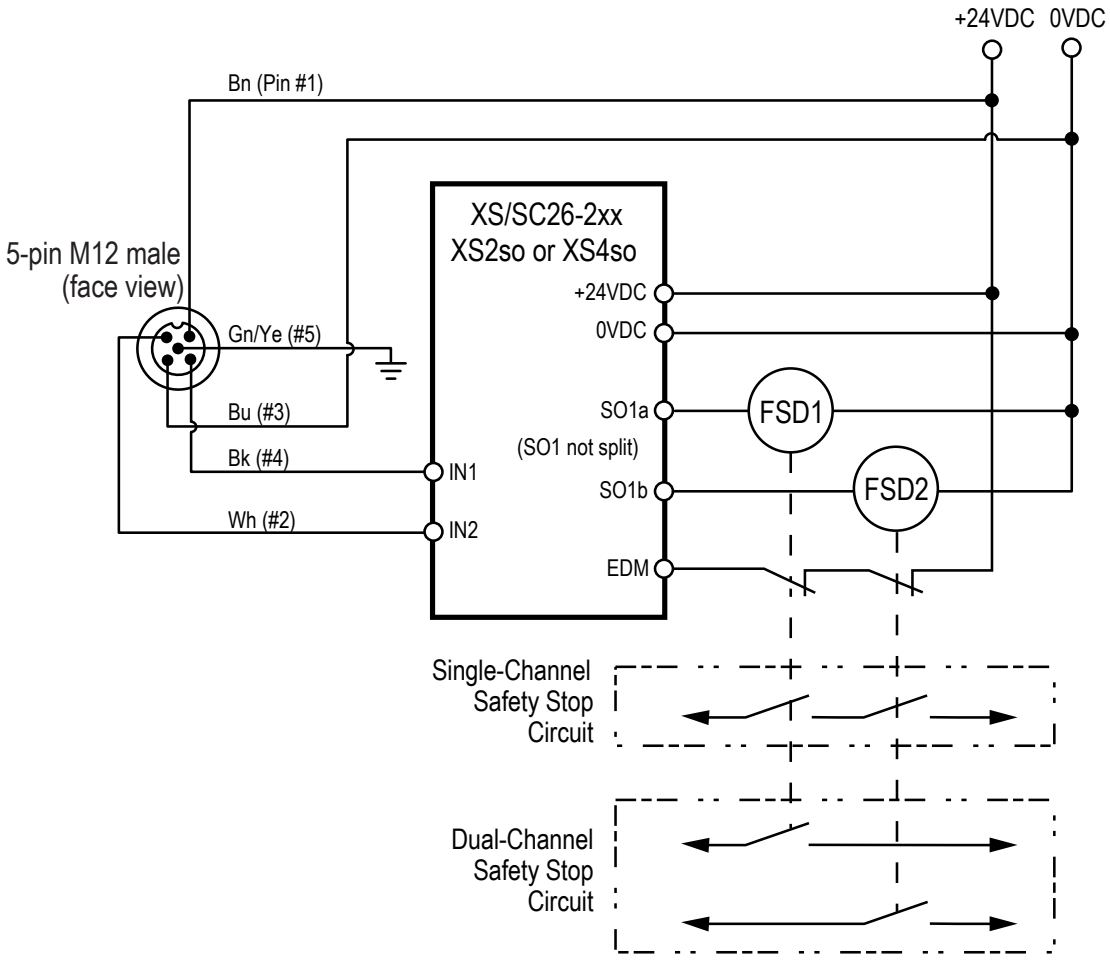

NOTE: See the XS/SC26-2.. instruction manual (p/n 174868) for complete installation instructions.

© Banner Engineering Corp. All rights reserved.
www.bannerengineering.com

6.5.5 Generic Wiring Diagram—8-pin Receiver and Redundant FSDs

Figure 44. Generic Wiring Diagram—8-pin Receiver and Redundant FSDs

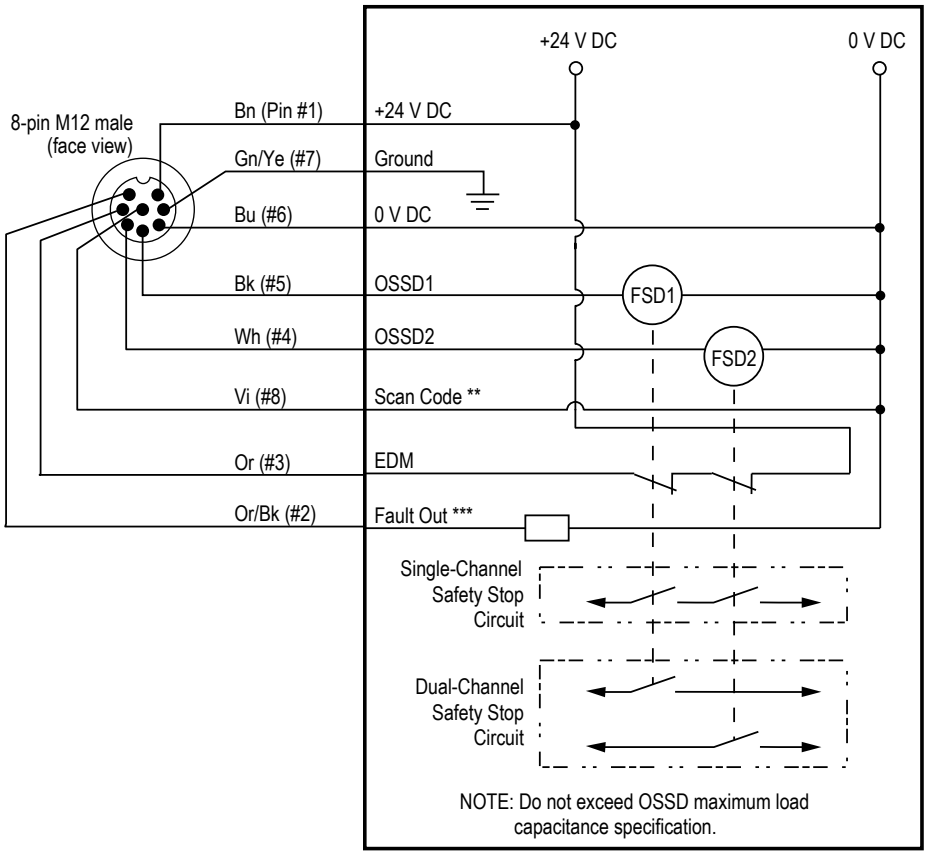

** Scan Code 1: Not connected or connected to 0 V DC (as shown). Scan Code 2: connect to 24 V DC.

*** Fault Out: Not connected or connect indicator (70 mA maximum) to 0 V DC (as shown).

© Banner Engineering Corp. All rights reserved.
www.bannerengineering.com

6.5.6 Generic Wiring Diagram—8-pin Receiver and IM-T-9A Interface Module

Figure 45. Generic Wiring Diagram—IM-T-9A Interface Module (1-Channel EDM)

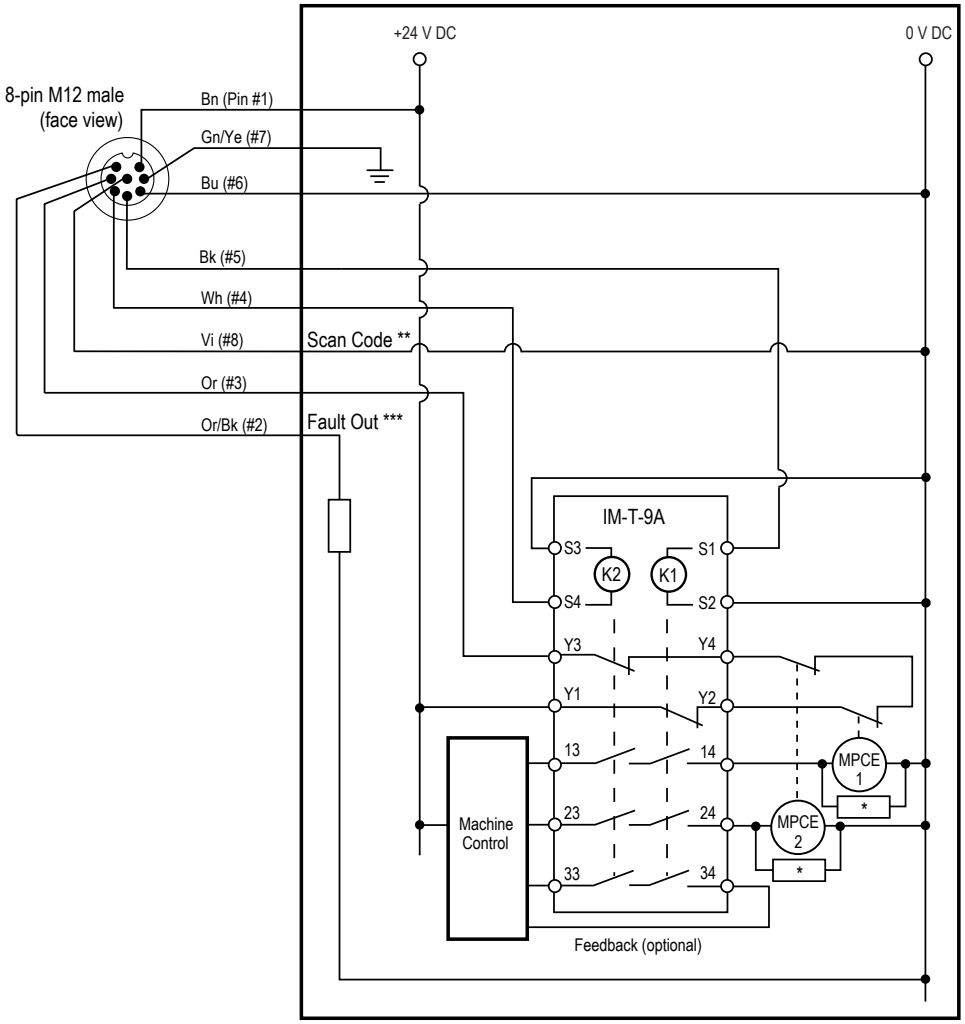

* Installation of transient (arc) suppressors across the coils of MPCE1 and MPCE2 is recommended (see WARNING).

** Scan Code 1: Not connected or connected to 0 V DC (as shown). Scan Code 2: connect to 24 V DC.

*** Fault Out: Not connected or connect indicator (70 mA maximum) to 0 V DC (as shown).

Other interfacing modules and solutions available. See the Banner Engineering catalog or website for more information.

NOTE: See the IM-T-..A module datasheet (p/n 62822) for complete installation instructions.

WARNING:

- **Properly install arc or transient suppressors**
- Failure to follow these instructions could result in serious injury or death.
- Install any suppressors as shown across the coils of the machine primary control elements. Do not install suppressors directly across the output contacts of the safety or interface module. In such a configuration, it is possible for suppressors to fail as a short circuit.

© Banner Engineering Corp. All rights reserved.
www.bannerengineering.com

6.5.7 Generic Wiring Diagram—8-pin Receiver and a Smart Device

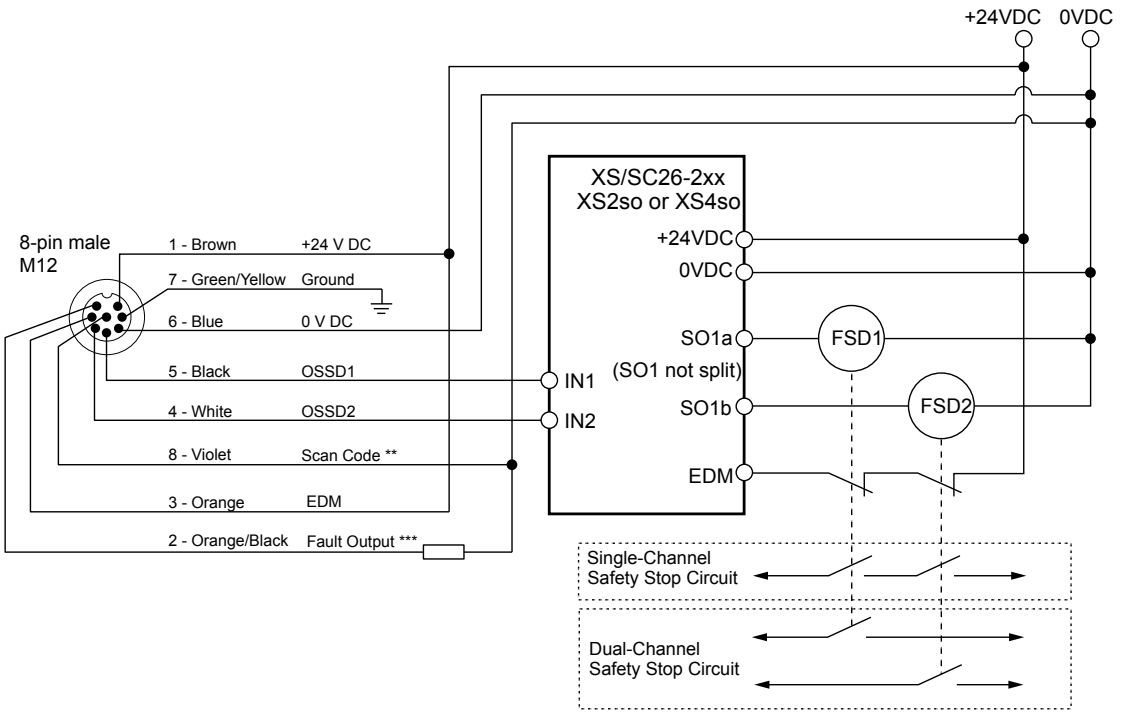

** Scan Code 1: Not connected or connected to 0VDC (as shown). Scan Code 2: Connect to 24VDC.

*** Fault Out: Not connected or connect indicator (70 mA maximum) to 0VDC (as shown).

© Banner Engineering Corp. All rights reserved.
www.bannerengineering.com

Chapter Contents

7.1 Security Protocol 65
7.2 Status Indicators 65
7.3 Normal Operation 67
7.4 Periodic Checkout Requirements 67

Chapter 7 System Operation

7.1 Security Protocol

Certain procedures for installing, maintaining, and operating the EZ-SCREEN LS must be performed by either Designated Persons or Qualified Persons.

A **Designated Person** is identified and designated in writing, by the employer, as being appropriately trained and qualified to perform system resets and the specified checkout procedures on the EZ-SCREEN LS. The Designated Person is empowered to:

- Perform manual resets and hold possession of the reset key (see "Recovery Procedures" on page 72)
- Perform the Daily Checkout Procedure

A **Qualified Person**, by possession of a recognized degree or certificate of professional training, or by extensive knowledge, training, and experience, has successfully demonstrated the ability to solve problems relating to the installation of the EZ-SCREEN LS System and its integration with the guarded machine. In addition to everything for which the Designated Person is empowered, the Qualified Person is empowered to:

- Install the EZ-SCREEN LS System
- Perform all checkout procedures
- Make changes to the internal configuration settings
- Reset the System following a lockout condition

7.2 Status Indicators

7.2.1 Emitter

A single bi-color red/green status indicator shows whether power is applied, and whether the emitter is in a Run mode or a Lockout. A Diagnostic Display indicates a specific error code when the emitter is in Lockout; the display also momentarily indicates the scan code setting at power-up.

Table 12. Emitter Status Indicator Operation

Operating Status	Status Indicator	7-Segment Diagnostic Display
Power-up	Red Single Flash	Scan code flashes 3 times - sequentially  or
Run Mode	Green	
Lockout	Flashing Red	Displays error code (see "Troubleshooting" on page 72)

7.2.2 Receiver

A single bi-color red/green status indicator shows when the OSSD outputs are On (green) or Off (red), blanking is enabled (flashing green), or the System is in Lockout status (flashing red).

An amber status indicator shows when the system is in Run mode.

The Diagnostic Display indicates the receiver's trip (–) configuration and displays a specific error code when the receiver is in Lockout. The Diagnostic Display also momentarily indicates the scan code setting at power-up.

Along the length of the exit window are located bi-color red/green Alignment indicators that show whether a section of the defined area (± 35 mm of indicator) is aligned and clear, blocked and/or misaligned, or has been fixed blanked.

© Banner Engineering Corp. All rights reserved.
www.bannerengineering.com

7.2.3 Receiver Status Indicator Operation - Trip Output

Operating Mode	Run Mode Indicator	Status Indicator	Alignment Indicators[11]	7-Segment Diagnostic Display	OSSD Outputs
Power-up	Off	Single-Flash Red	All Single-Flash Red	Scan code flashes 3 times - sequentially 	Off
Alignment Mode - Beam 1 Blocked	Off	Red	Alignment 1 Red, Others Off		Off
Alignment Mode - Beam 1 Clear	On	Red	Red or Green	Total number of blocked beams	Off
Run Mode - Clear	On	Solid Green or Flashing Green (Blanking)	All On Green		On
Run Mode - Blocked	On	Red	Red or Green	Total number of blocked beams	Off
Lockout	Off	Flashing Red	All Off	Displays error code (see "Troubleshooting" on page 72)	Off

NOTE: If both the emitter and its corresponding receiver do not have the same scan code setting, the receiver indicates that Beam 1 is blocked (the Diagnostic display indicating "C" "H" "1" as shown above). This can occur if the Scan Code input is not wired the same for both sensors or if the EDM circuit has not been re-wired for one-channel monitoring in retrofit installations of two-channel EDM applications, see the warning in the wiring section for "External Device Monitoring" on page 56.

7.2.4 Status Indicators for Cascaded Applications

When multiple light screens are cascaded, some unique indications may occur, as indicated described.

Table 13. Receiver #1

Condition	OSSDs	Display	Run Mode Indicator	Status Indicator
Clear	On		On	Green
CSSI Stop (Receiver #2, 3, or 4 is open)	Off		On	Red

Table 14. Receiver #2, 3, or 4 (Configured for Trip Operation)

Condition	OSSDs	Display	Run Mode Indicator	Status Indicator
Clear	On		On	Green
Blocked	Off	# of beams blocked	On	Red
CSSI Stop (Receiver upstream is blocked)	Off		On	Red
Cleared	On		On	Green

[11] If beam 1 is blocked, Alignment indicators will be Off, because beam 1 provides the synchronization signal for all the beams.

© Banner Engineering Corp. All rights reserved.
www.bannerengineering.com

Figure 46. Cascade powered up clear

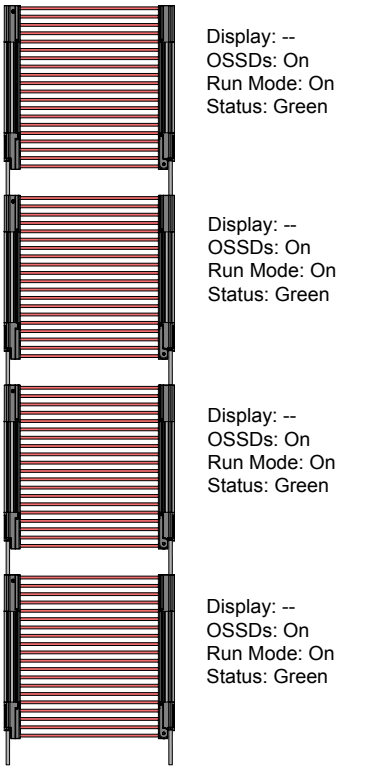

Figure 47. Object is blocking light curtain #4

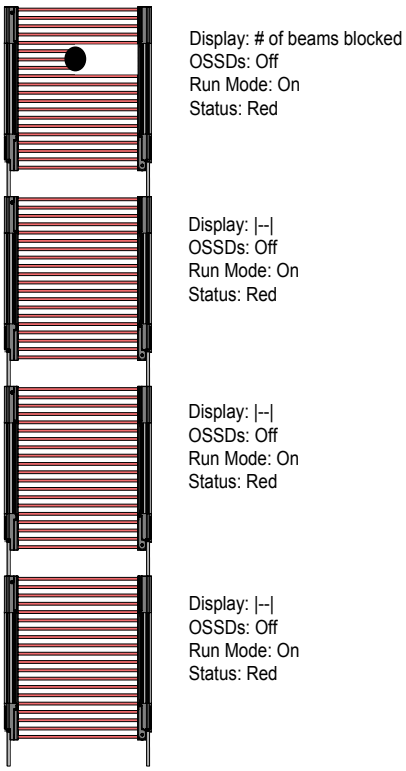

Figure 48. Object is blocking light curtain #3

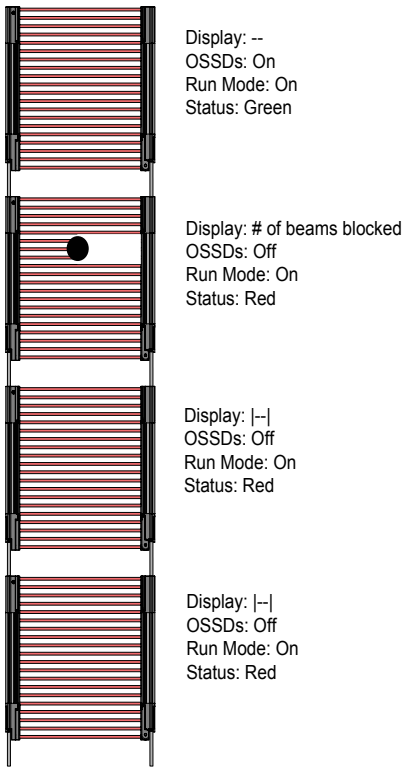

7.3 Normal Operation

7.3.1 System Power-Up

When power is applied, each sensor conducts self-tests to detect critical internal faults, determine configuration settings, and prepare the EZ-SCREEN LS for operation. If either sensor detects a critical fault, scanning ceases, the receiver outputs remain Off and diagnostic information displays on the sensor's Diagnostic Display. If no faults are detected, the EZ-SCREEN LS automatically enters Alignment mode, and the receiver looks for an optical sync pattern from the emitter. If the receiver is aligned and receives the proper sync pattern, it enters Run mode and begins scanning to determine the blocked or clear status of each beam. No manual reset operation is required.

7.3.2 Run Mode

If any beams become blocked while the EZ-SCREEN LS is running, the receiver outputs turn Off within the stated EZ-SCREEN LS response time (see "Specifications" on page 24). If all the beams then become clear, the receiver outputs come back On. No resets are needed. All required machine control resets are provided by the machine control circuit.

Internal Faults (Lockouts): If either sensor detects a critical fault, scanning ceases, the receiver outputs turn Off and diagnostic information displays on the sensor's Diagnostic Display. For resolution of error/fault conditions, see "Lockout Conditions" on page 72.

7.4 Periodic Checkout Requirements

To ensure continued reliable operation, the System must be checked out periodically. Banner Engineering highly recommends performing the System checkouts as described below. However, a Qualified Person should evaluate these recommendations, based on the specific application and the results of a machine risk assessment, to determine the appropriate content and frequency of checkouts.

At every shift change, power-up, and machine setup change, the Daily Checkout should be performed; this checkout may be performed by a Designated or Qualified Person.

© Banner Engineering Corp. All rights reserved.
www.bannerengineering.com

Semi-annually, the System and its interface to the guarded machine should be thoroughly checked out; this checkout must be performed by a Qualified Person (see "Checkout Procedures" on page 69). A copy of these test results should be posted on or near the machine.

Whenever changes are made to the System (either a new configuration of the EZ-SCREEN LS System or changes to the machine), perform the Commissioning Checkout (see "Commissioning Checkout" on page 69).

Verify Proper Operation The EZ-SCREEN LS can operate as it is designed only if it and the guarded machine are operating properly, both separately and together. It is the user's responsibility to verify this, on a regular basis, as instructed in "Checkout Procedures" on page 69. Failure to correct such problems can result in an increased risk of harm. Before the System is put back into service, verify that the EZ-SCREEN LS System and the guarded machine perform exactly as outlined in the checkout procedures and any problem(s) are found and corrected.

© Banner Engineering Corp. All rights reserved.
www.bannerengineering.com

Chapter Contents

8.1 Schedule of Checkouts 69
8.2 Commissioning Checkout..... 69

Chapter 8 Checkout Procedures

This section lists the schedule of checkout procedures and describes where each procedure is documented. Checkouts must be performed as described. Results should be recorded and kept in the appropriate place (for example, near the machine, and/or in a technical file).

Banner Engineering highly recommends performing the System checkouts as described. However, a Qualified Person (or team) should evaluate these generic recommendations, considering their specific application, and determine the appropriate frequency of checkouts. This will generally be determined by a risk assessment, such as the one contained in ANSI B11.0. The result of the risk assessment will drive the frequency and content of the periodic checkout procedures and must be followed.

8.1 Schedule of Checkouts

Checkout cards and this manual can be downloaded at www.bannerengineering.com.

Checkout Procedure	When to Perform	Where to Find the Procedure	Who Must Perform the Procedure
Trip Test	At Installation Any time the System, the guarded machine, or any part of the application is altered.	"Perform a Trip Test" on page 52	Qualified Person
Commissioning Checkout	At Installation Whenever changes are made to the System (for example, either a new configuration of the EZ-SCREEN LS or changes to the guarded machine).	"Commissioning Checkout" on page 69	Qualified Person
Shift/Daily Checkout	At each shift change Machine setup change Whenever the System is powered up During continuous machine run periods, this checkout should be performed at intervals not to exceed 24 hours.	**Daily Checkout Card** (Banner p/n 179481 and 179482) A copy of the checkout results should be recorded and kept in the appropriate place (for example, near or on the machine, in the machine's technical file).	Designated Person or Qualified Person
Semi-Annual Checkout	Every six months following System installation, or whenever changes are made to the System (either a new configuration of the EZ-SCREEN LS or changes to the machine).	**Semi-Annual Checkout Card** (Banner p/n 179483) A copy of the checkout results should be recorded and kept in the appropriate place (for example, near or on the machine, in the machine's technical file).	Qualified Person

8.2 Commissioning Checkout

Perform this checkout procedure as part of the System installation after the System has been interfaced to the guarded machine, or whenever changes are made to the System (either a new configuration of the EZ-SCREEN LS or changes to the machine). A Qualified Person must perform the procedure. Checkout results should be recorded and kept on or near the guarded machine as required by applicable standards.

WARNING:

- **Do not use the system until the checkouts are verified**
- Attempts to use the guarded/controlled machine before these checks are verified could result in serious injury or death.
- If all these checks cannot be verified, do not attempt to use the safety system that includes the Banner Engineering Corp. device and the guarded/controlled machine until the defect or problem has been corrected.

© Banner Engineering Corp. All rights reserved.
www.bannerengineering.com

To prepare the System for this checkout:

1. Examine the guarded machine to verify that it is of a type and design compatible with the EZ-SCREEN LS System. See "Appropriate Applications" on page 11 for a list of appropriate and inappropriate applications.
2. Verify that the EZ-SCREEN LS is configured for the intended application.
3. Verify that the safety distance (minimum distance) from the closest danger point of the guarded machine to the defined area is not less than the calculated distance, per "Calculating the Safety Distance (Minimum Distance)" on page 28.
4. Verify that:
    a. Access to any dangerous parts of the guarded machine is not possible from any direction not protected by the EZ-SCREEN LS System, hard (fixed) guarding, or supplemental safeguarding, and
    b. It is not possible for a person to stand between the defined area and the dangerous parts of the machine, or
    c. Supplemental safeguarding and hard (fixed) guarding, as described by the appropriate safety standards, are in place and functioning properly in any space (between the defined area and any hazard) which is large enough to allow a person to stand undetected by the EZ-SCREEN LS.
5. If used, verify that all reset switches are mounted outside and in full view of the guarded area, out of reach of anyone inside the guarded area, and that means of preventing inadvertent use is in place.
6. Examine the electrical wiring connections between the EZ-SCREEN LS OSSD outputs and the guarded machine's control elements to verify that the wiring meets the requirements stated in "Electrical Connections to the Guarded Machine" on page 53.
7. Inspect the area near the defined area (including work pieces and the guarded machine) for reflective surfaces (see "Adjacent Reflective Surfaces" on page 33). Remove the reflective surfaces if possible by relocating them, painting, masking, or roughening them. Remaining problem reflections will become apparent during the Trip Test.
8. Verify that power to the guarded machine is Off. Remove all obstructions from the defined area. Apply power to the EZ-SCREEN LS System.
9. Observe the Status indicators and Diagnostic Display:
    - **Lockout:** Status flashing red; all others Off
    - **Blocked:** Status—Solid red; one or more Alignment indicators— Solid red; Run Mode— Solid amber
    - **Clear:** Status—Solid green; Alignment indicators— Solid green (flashing green indicates blanking is enabled); Run Mode— Solid amber
10. A Blocked condition indicates that one or more of the beams is misaligned or interrupted. To correct this situation, see "Optical Alignment" on page 48.
11. After the green and amber Status indicators are On, **perform the trip test** ("Perform a Trip Test" on page 52) on each sensing field to verify proper System operation and to detect possible optical short circuits or reflection problems. **Do not continue until the EZ-SCREEN LS passes the trip test.**

IMPORTANT: Do not expose any individual to any hazard during the following checks.



WARNING:
- **Clear the guarded area before applying power or resetting the system**
- Failure to clear the guarded area before applying power could result in serious injury or death.
- Verify that the guarded area is clear of personnel and any unwanted materials before applying power to the guarded machine or before resetting the system.

12. Apply power to the guarded machine and verify that the machine does not start up.
13. Interrupt (block) the defined area with the supplied test piece and verify that it is not possible for the guarded machine to be put into motion while the beam(s) is blocked.
14. Initiate machine motion of the guarded machine and, while it is moving, use the supplied test piece to block the defined area. Do not attempt to insert the test piece into the dangerous parts of the machine. Upon blocking any beam, the dangerous parts of the machine must come to a stop with no apparent delay.
15. Remove the test piece from the beam; verify that the machine does not automatically restart, and that the initiation devices must be engaged to restart the machine.
16. Remove electrical power to the EZ-SCREEN LS. Both OSSD outputs should immediately turn Off, and the machine must not be capable of starting until power is re-applied to the EZ-SCREEN LS.

© Banner Engineering Corp. All rights reserved.
www.bannerengineering.com

17. Test the machine stopping response time, using an instrument designed for that purpose, to verify that it is the same or less than the overall system response time specified by the machine manufacturer. **Do not continue operation until the entire checkout procedure is complete and all problems are corrected.**

© Banner Engineering Corp. All rights reserved.

Chapter Contents

9.1 Lockout Conditions 72
9.2 Recovery Procedures 72
9.3 Electrical and Optical Noise 75

Chapter 9 Troubleshooting

9.1 Lockout Conditions

WARNING:
- **Shut down the machinery before servicing**
- Servicing the Banner Engineering Corp. device or system while the hazardous machinery is operational could result in serious injury or death.
- The machinery to which the Banner Engineering Corp. device or system is connected must not be operating at any time during major service or maintenance. This might require lockout/tagout procedures (refer to OSHA1910.147, ANSI Z244-1, ISO 14118 or the applicable standard for controlling hazardous energy).

A Lockout condition causes all of the EZ-SCREEN LS OSSD outputs to turn or remain Off, sending a stop signal to the guarded machine. Each sensor provides diagnostic error codes to assist in the identification of the cause(s) of lockouts (see "Emitter Error Codes" on page 75 and "Receiver Error Codes" on page 73)).

WARNING:
- **Lockouts and power failures indicate a problem**
- Attempts to continue to operate machinery by bypassing the Banner Engineering Corp. device or other safeguards is dangerous and could result in serious injury or death.
- A Qualified Person[12] must immediately investigate the problem.

The following tables indicate a sensor lockout condition:

Table 15. Receiver and emitter lockout conditions

Lockout Conditions	Receiver LED Behavior	Emitter LED Behavior
Run mode indicator	Off	N/A
Status indicator	Flashing red	Flashing red
Alignment indicators	Off	N/A
Diagnostic display	Error code (flashing)	Error code (flashing)

If both the emitter and its corresponding receiver do not have the same scan code setting, the receiver indicates that Beam 1 is blocked (the Diagnostic display indicating "C" "H" "1" as shown in "Receiver Error Codes" on page 73). This is not considered a lockout and can occur if the Scan Code input is not wired the same for both sensors or if the EDM circuit has not been re-wired for one-channel monitoring in retrofit installations of two-channel EDM applications (see the warning in the wiring section of "External Device Monitoring" on page 56).

9.2 Recovery Procedures

To recover from a Lockout condition, correct all errors, power the sensor down, wait a few seconds, and then power the sensor back up.

[12] A person who, by possession of a recognized degree or certificate of professional training, or who, by extensive knowledge, training and experience, has successfully demonstrated the ability to solve problems relating to the subject matter and work.

© Banner Engineering Corp. All rights reserved.
www.bannerengineering.com

WARNING:
- **Lockouts and power failures indicate a problem**
- Attempts to continue to operate machinery by bypassing the Banner Engineering Corp. device or other safeguards is dangerous and could result in serious injury or death.
- A Qualified Person[13] must immediately investigate the problem.

WARNING:
- **Shut down the machinery before servicing**
- Servicing the Banner Engineering Corp. device or system while the hazardous machinery is operational could result in serious injury or death.
- The machinery to which the Banner Engineering Corp. device or system is connected must not be operating at any time during major service or maintenance. This might require lockout/tagout procedures (refer to OSHA1910.147, ANSI Z244-1, ISO 14118 or the applicable standard for controlling hazardous energy).

9.2.1 Receiver Error Codes

Diagnostic Display (14)	Error Description	Appropriate Action
	**Output Error** **Error is caused by:** • one or both outputs being shorted to a power supply (high or low) • by shorting OSSD 1 to OSSD 2 • by an overload (greater than 0.5 A)	• Disconnect the OSSD loads and cycle power to the receiver. • If the error clears, the problem is in the OSSD load(s) or in the load wiring. • If the error continues with no load connected, replace the receiver.
	**Receiver Error** This error can occur due to either excessive electrical noise or an internal failure. This error can also occur when the remote fixed blanking RUN/PROGRAM switch is in the PROGRAM position during power-up.	• Cycle power, "Recovery Procedures" on page 72. • If the error clears, perform a Daily Checkout procedure (per EZ-SCREEN Checkout Procedures: Shift and Daily Checkout Procedure; Daily Checkout Card) and if the System checks out, resume operation. If the System fails the Daily Checkout procedure, replace the receiver. • If the error continues, check the ground connection (pin 7). • If the sensor has a good earth ground connection to pin 7, perform the Initial Checkout procedure (per "Initial Checkout Procedure" on page 47). • If the error clears, check the external connections and configuration settings. • If remote fixed blanking is used, ensure RUN/PROGRAM is in the RUN position and cycle power. • If the error continues, replace the receiver.
	**Optical Noise Error** This error can occur due to excessive optical noise	• Verify alignment of emitter and receiver as described in "Emitter and Receiver Orientation" on page 36, "Installation of Multiple Systems" on page 37, and "Sensor Mounting and Mechanical Alignment" on page 41. • Check for crosstalk between adjacent systems and correct installation and alignment as needed • Cycle power and perform "Recovery Procedures" on page 72
	**Receiver Error** This error can be caused by intermittent connections between cascaded receivers or excessive electrical noise.	• Verify the cordset connections between the cascaded receivers. • If the error continues, replace the cordset(s). • If the error still continues, replace the receiver with the error code.

Continued on page 74

[13] A person who, by possession of a recognized degree or certificate of professional training, or who, by extensive knowledge, training and experience, has successfully demonstrated the ability to solve problems relating to the subject matter and work.
[14] Multiple-digit codes are sequential, followed by a pause.

© Banner Engineering Corp. All rights reserved.
www.bannerengineering.com

Continued from page 73

Diagnostic Display	Error Description	Appropriate Action
	**EDM Error** This error can occur when the EDM input is open at power up or if the signal fails to respond within 250 ms of the OSSDs changing state (On to Off).	• Verify that the EDM wiring is correct and that the external devices meet the requirements described in "Machine Primary Control Elements and EDM Input" on page 55 • If the error continues, remove power to the guarded machine, disconnect the OSSD loads, disconnect the EDM input signals, configure EDM for No Monitoring (per "Machine Primary Control Elements and EDM Input" on page 55) and conduct the Initial Checkout procedure • If the error clears, the problem is in the External Device contacts or wiring, or is a response-time problem of the external devices. Verify that the EDM wiring is correct and that the external devices meet the requirements described in "Machine Primary Control Elements and EDM Input" on page 55 • If the error continues, check for noise on the EDM inputs (see "Electrical and Optical Noise" on page 75)
	**Fixed Blanking Error** This error occurs when beam(s) that have been blanked (programmed to ignore a fixed object) become clear when the object is removed or moved.	• Reposition the object and cycle power. • Re-program (teach) the fixed blanked object(s), see "Remote Fixed Blanking" on page 22.
	**Programming Timeout Error** This error occurs when the Fixed Blanking programming mode (teach) exceeds the ten-minute limit.	• Re-program (teach) the fixed blanked object(s), see "Remote Fixed Blanking" on page 22.
	**Cascade Error** This error occurs when a cascade receiver is not terminated properly or if the EDM wiring to a cascade receiver is not terminated properly. This error can occur if the ID input (pin 3, orange) is not connected to +24 V DC.	• Verify that the last receiver in the cascade is terminated properly (see "Cascade" on page 76). • Verify that the EDM wiring is correct (see error code 8). • Verify the cordset connections between cascaded receivers. • If the error continues, replace the receiver. **NOTE:** In a cascaded System, all receivers are connected together, and all emitters are connected together.
	**Excessive Noise Error – Cascade Input** This error can occur due to excessive levels of electrical noise.	• Cycle power (see "Recovery Procedures" on page 72). • If the error clears, perform the daily checkout procedure (per EZ-SCREEN Checkout Procedures: Shift and Daily Checkout Procedure; Daily Checkout Card) and if the System checks out, resume operation. If the System fails the Daily Checkout procedure, replace the receiver. • If the error continues, check the ground connection (pin 7). • If the sensor has a good earth ground connection to pin 7, perform the Initial Checkout procedure ("Perform a Trip Test" on page 52). • If the error clears, check for sources of electrical noise (see "Electrical and Optical Noise" on page 75). • If the error continues, replace the receiver.
	**Cascade Input Simultaneity** **Flashing H:** Operation of channels A and B mismatch > 3 seconds. **Steady H:** Cascade Input (CSSI) Stop Command. A Receiver upstream in a cascade system is blocked or the dual-channel input is open (for example, Interlocked Guard is open).	• Check operation of Channel A and Channel B of cascade input. • Cycle power or cycle the input. See "Emergency Stop Buttons in Cascaded Systems" on page 81 and "Interlock Switches in Cascaded Systems" on page 83.

© Banner Engineering Corp. All rights reserved.
www.bannerengineering.com

9.2.2 Emitter Error Codes

Diagnostic Display[15]	Error Description	Appropriate Action
	**Emitter Error** This error can occur if the ID Input (pin 3, Orange) is not connected to +24 V DC. Excessive electrical noise or an internal failure can also cause this error.	• Verify that the ID Input (ID_in) wiring is connected to +24 V DC. See "Generic Wiring Diagram—5-pin and 8-pin Emitter" on page 58 • Cycle the power to the emitter per "Recovery Procedures" on page 72 • If the error clears, perform the daily checkout procedure (per EZ-SCREEN Checkout Procedures: Shift and Daily Checkout Procedure; Daily Checkout Card). If the System checks out, resume operation. If the System fails, replace the emitter • If the error continues, check the ground connection (see "Cordsets" on page 87) • If the sensor has a good earth ground connection, check for electrical noise (see "Electrical and Optical Noise" on page 75) • If the error persists, replace the emitter
	**Emitter LED Problem** This is not an error.	This indication can occur due to a potential problem with an LED and is provided as an early warning indicator

9.3 Electrical and Optical Noise

The EZ-SCREEN LS is designed and manufactured to be highly resistant to electrical and optical noise and to operate reliably in industrial settings. However, serious electrical and/or optical noise may cause a random Trip. In very extreme electrical noise cases, a Lockout is possible. To minimize the effects of transitory noise, the EZ-SCREEN LS dual scan technology responds to noise only if the noise is detected on multiple consecutive scans.

If random nuisance Trips or lockouts occur, check the following:

- Poor connection between the sensor and earth ground
- Optical interference from adjacent light screens or other photoelectrics
- Sensor input or output wires routed too close to noisy wiring

9.3.1 Check for Sources of Electrical Noise

It is important that the light screen sensors have a good earth ground. Without this, the System can act like an antenna and random Trips and Lockouts can occur.

All EZ-SCREEN LS wiring is low voltage; running these wires alongside power wires, motor/servo wires, or other high-voltage wiring can inject noise into the EZ-SCREEN LS System. It is good wiring practice (and may be required by code) to isolate EZ-SCREEN LS wires from high-voltage wires.

1. Use the Banner model BT-1 Beam Tracker Alignment Aid (see "Alignment Aids" on page 96) to detect electrical transient spikes and surges.
2. Cover the lens of the BT-1 with electrical tape to block optical light from entering the receiver lens.
3. Press the RCV button on the BT-1 and position the Beam Tracker on the wires going to the EZ-SCREEN LS or any other nearby wires.
4. Install proper transient suppression across the load to reduce the noise.

9.3.2 Check for Sources of Optical Noise

1. Turn off the emitter or completely block the emitter.
2. Use a Banner BT-1 Beam Tracker (see "Alignment Aids" on page 96) to check for light at the receiver.
3. Press the RCV button on the BT-1 and move it across the full length of the receiver's sensing window. If the BT-1's indicator lights, check for emitted light from other sources (other safety light screens, grids or points, or standard photoelectric sensors).

[15] Multiple-digit codes are sequential, followed by a pause.

© Banner Engineering Corp. All rights reserved.
www.bannerengineering.com

Chapter Contents

10.1 Overview of Cascading 76
10.2 Determining Interconnect Cordset Lengths 78
10.3 Response Time for Cascaded Light Screens 79
10.4 Emergency Stop Buttons in Cascaded Systems 81
10.5 Interlock Switches in Cascaded Systems 83
10.6 Remote TEACH Fixed Blanking (Wiring) 85

Chapter 10 Cascade

10.1 Overview of Cascading

EZ-SCREEN LS emitters and receivers are available in cascadeable models. These models can be used as stand-alone light screens, or can be cascaded up to four pairs in one system. The cascaded sensor pairs can be any length, any number of beams, or have different resolutions (14 mm, 23 mm, and 40 mm), as long as each emitter matches its receiver.

NOTE: EZ-SCREEN SLL.. (standard) or SLLC.. (cascadable) models can be used as the end sensor pair. Other EZ-SCREEN components cannot be interfaced with the cascade input.

The control reliability, installation and alignment, electrical interface to the guarded machine, initial checkout, periodic checkout, troubleshooting and maintenance features of cascadeable models are functionally identical to those of the standard models.

Make a cascade interconnection by using the double-ended removable disconnect DELS-11..E cordsets. Make connections for optional EZ-LIGHT indication (integral or remotely located), interfacing to an E-Stop button or Interlocking switches (hard contacts), and remote fixed blanking at the end receiver or with an individual cascade receiver; see "Cordsets" on page 87. All receivers in a cascade activate the same set of OSSD outputs: the OSSDs of the master receiver.

NOTE: In a cascaded system, all receivers are connected together, and all emitters are connected together. Cascaded sensors are configured automatically.

WARNING:
- **Adjacent components can synchronize incorrectly**
- The light curtain's safety function is reduced when components are not synchronized correctly, creating an unsafe condition that could result in serious injury or death.
- When multiple systems are mounted closely together, or where a secondary emitter is in view (within ±5°) and within range of an adjacent receiver, a receiver can synchronize to the signal from the wrong emitter, reducing the safety function of the light curtain.

WARNING:
- **Use a scan code**
- If you do not use a scan code, a receiver can synchronize to the signal from the wrong emitter, reducing the safety function of the light curtain and creating an unsafe condition that could result in serious injury or death.
- Configure adjacent systems to use different scan codes (for example, set one system to use scan code 1 and the other system to use scan code 2). Perform a trip test to confirm the light curtain function.

© Banner Engineering Corp. All rights reserved.
www.bannerengineering.com

Figure 49. Light screens guarding a robotic cell

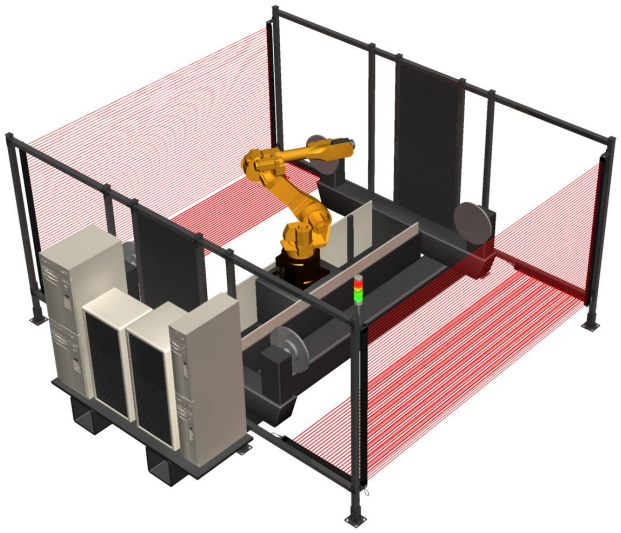

Figure 50. Cascaded light screens guarding a u-shaped cell



10.1.1 System Components and Specifications

A multiple-light screen cascaded EZ-SCREEN LS system includes compatible emitter/receiver pairs (up to four), a terminator plug (shipped installed on each cascade receiver) for the last receiver in the cascade, two RD cables or pigtail cables to interface with the machine and provide power to the system, and pairs of double-ended (sensor interface) cables to interconnect the emitters and the receivers in the cascade. (A “dummy” plug is installed at the cascade end of each emitter. It is not required for operation, but maintains the emitter’s IP67 rating.) Additional cordsets may be used to enable quick disconnect (QD) connections; see "Cordsets" on page 87.

The terminator plug (model EZLSA-RTP-1) must be used on the receiver in a stand-alone system, and on the last receiver in a multiple-pair cascade, unless an EZA-RBK-1 key switch for remote teach fixed blanking, an RDLS-8..D cordset interfaced with an E-stop or other hard contacts is in place (see "Emergency Stop Buttons in Cascaded Systems" on page 81, "Interlock Switches in Cascaded Systems" on page 83), or an EZLSA-K30LGR EZ-LIGHT or DELSEF-xxE cordset with a remotely located EZ-LIGHT or indicator.

NOTE: The machine interface cable must connect to the sensor end adjacent to the status indicators.

Available single-ended, double-ended, and splitter cordsets are listed in "Cordsets" on page 87. Cordset lengths are limited – for both the machine interface/power cables and the sensor interconnect cables; see "Determining Interconnect Cordset Lengths" on page 78 for more information.

10.1.2 Receiver Display

In Run mode, the 7-segment display shows the following. See if any indication is flashing.

Condition	Display
Clear	
Trip output operation	
Blocked	Number of blocked beams (sequential)
CSSI Input Off or open, for example, “upstream” receiver is blocked or in lockout	 Solid (not flashing)

© Banner Engineering Corp. All rights reserved.
www.bannerengineering.com

10.2 Determining Interconnect Cordset Lengths

The following cordset length charts are possible combinations for each side of example cascaded systems. Model DELS-11...E cordsets are used for calculations. Other lengths and combinations are possible; call Banner Engineering for assistance.

Figure 51. Cascade Cordset Connection

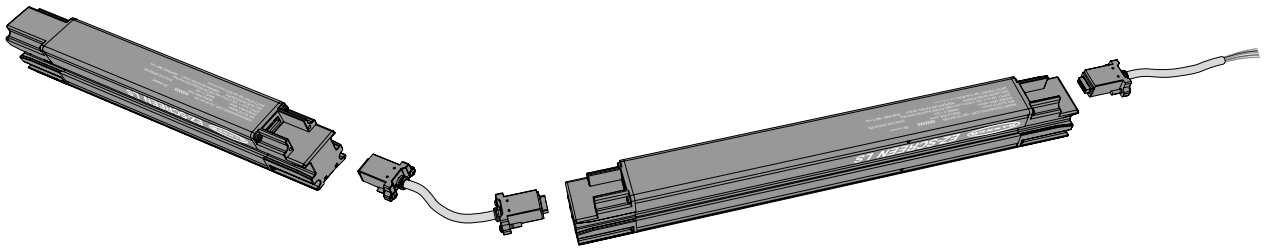

As the machine interface cordset lengthens, the voltage available at the first (master) sensor pair decreases, which results in shorter possible interconnect cordsets to maintain supply voltage requirements at last cascaded sensor.

NOTE: The machine interface cable (e.g. RDLS-8xxD, DELSE-8xxD) must connect to the sensor end adjacent to the indicators and serial number label for the system to operate properly.

Table 16. Maximum machine interface cable length versus total load current (OSSDs)

Maximum Machine Interface Cordset Length					
EZ-SCREEN LS Receivers in Cascade	Total Load Current (OSSD 1 + OSSD 2)				
	0.1 A	0.25 A	0.5 A	0.75 A	1.0 A
1	95.7 m (314 ft)	78 m (256 ft)	54.9 m (180 ft)	42.1 m (138 ft)	34.1 m (112 ft)
2 [16]	45.7 m (150 ft)	38.1 m (125 ft)	28.9 m (98 ft)	24.7 m (81 ft)	20.7 m (68 ft)
3 [17]	25.3 m (83 ft)	22.3 m (73 ft)	18.6 m (61 ft)	15.8 m (52 ft)	13.7 m (45 ft)
4 [18]	20.1 m (66 ft)	18.3 m (60 ft)	15.5 m (51 ft)	13.7 m (45 ft)	12.2 m (40 ft)

NOTE: Emitter and receiver power (current) requirements are accounted for. The above values represent additional current draw that must be accounted for because of the load current.

NOTE: Maximum cordset lengths are intended to ensure that adequate power is available to the EZ-SCREEN LS when the supply is operating at +20 V dc. Values in the previous table are worse case. Contact banner Engineering if there are any questions.

NOTE: The length of Emitter machine interface cordsets can be two times longer than those listed for the receiver in the table above if a CSB Splitter cordset is not used. If a CSB Splitter cordset is used, connect one branch of the CSB splitter to the receiver and other branch to the emitter via DEE2R double-ended cordset up to the same length listed in the table above.

Of the standard DELS-11..E interconnect cordsets, **all cascade installations (2, 3, or 4 pairs) can use up to a 15.3 m (50.2 ft) DELS-1150E cordset to connect the sensor pairs** (L2, L3, and L4), except for the following situations (refer to the following table).

Because of the large number of possible combinations, the table for four cascaded light screens cordset options includes only applications in which L2 = L4. A common installation is one that protects two areas of a machine, for example, the front and back of a power press, and uses four EZ-SCREEN LS pairs to create two L-shaped sensing fields.

[16] Assumes a 50 ft L2 cascade cable.
[17] Assumes 26.2 ft L2 and L3 cascade cables.
[18] Assumes L2 and L4 are 1 ft and L3 is 50 ft.

© Banner Engineering Corp. All rights reserved.
www.bannerengineering.com

Table 17. Maximum DELS-11..E Cascade Interconnection Cordset Lengths

	Machine Interface Cordset Length L1	Total Load Current (OSSD1 + OSSD2)									
		0.1 A		0.25 A		0.5 A		0.75 A		1.0 A	
		L2	L3	L2	L3	L2	L3	L2	L3	L2	L3
3 pairs	15.3 m (50.2 ft)	15.3 m (50.2 ft)	15.3 m (50.2 ft)	15.3 m (50.2 ft)	8 m (26.2 ft)	15.3 m (50.2 ft)	8 m (26.2 ft)	8 m (26.2 ft)	8 m (26.2 ft)	N/A	N/A
		15.3 m (50.2 ft)	15.3 m (50.2 ft)	8 m (26.2 ft)	15.3 m (50.2 ft)	8 m (26.2 ft)	15.3 m (50.2 ft)	8 m (26.2 ft)	15.3 m (50.2 ft)	N/A	N/A
		L2/L4	L3	L2/L4	L3	L2/L4	L3	L2/L4	L3	L2/L4	L3
4 pairs	15.3 m (50.2 ft)	0.3 m (1 ft)	8 m (26.2 ft)	0.3 m (1 ft)	8 m (26.2 ft)	0.3 m (1 ft)	8 m (26.2 ft)	N/A	N/A	N/A	N/A

Cordset example for two cascaded light screens

Machine Interface Cordset (L1): 15.3 m (50.2 ft) QDE-850D cordset

Sensor Interconnect Cordset (L2): 15.3 m (50.2 ft) DELS-1150E cordset or shorter

Cordset example for three cascaded light screens at 0.5 A OSSD load current

Machine Interface Cordset (L1): 15.3 m (50.2 ft) QDE-850D cordset

Sensor Interconnect Cordset (L2): 15.3 m (50.2 ft) DELS-1150E cordset or shorter

Sensor Interconnect Cordset (L3): 8 m (26.2 ft) DELS-1125E cordset or shorter

Cordset example for four cascaded light screens at 0.5 A OSSD load current

Machine Interface Cordset (L1): 15.3 m (50.2 ft) QDE-850D cordset

Sensor Interconnect Cordset (L2): 0.3 m (1 ft) DELS-111E cordset

Sensor Interconnect Cordset (L3): 8 m (26.2 ft) DELS-1125E cordset or shorter

Sensor Interconnect Cordset (L4): 0.3 m (1 ft) DELS-111E cordset

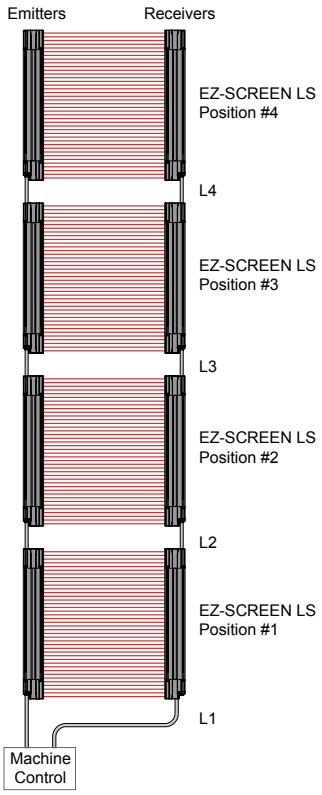

10.3 Response Time for Cascaded Light Screens

Response time is an important factor in determining a light screen's safety distance (minimum distance). For cascaded EZ-SCREEN LS systems, that response time is dependent on the number of light screens, the number of beams in the light screens, and their positions in the cascade. It can be calculated easily, in two ways:

- Based on the worst-case time for the entire cascade (where all light screens in the cascade have the same safety distance)
- Individually for each light screen in the cascade (safety distance is calculated for each light screen in the cascade)

WARNING:

- **Properly install the device**
- Failure to follow the installation instructions can result in ineffective or non-operation of the Banner Engineering Corp. device, which could create an unsafe condition resulting in serious injury or death.
- Follow all installation instructions.

© Banner Engineering Corp. All rights reserved.
www.bannerengineering.com

10.3.1 Determining System Response Time

If the safety distance does not need to be optimized (at a minimum), simply add 6 ms to the response time of the receiver with the longest response time $Tr_{(max)}$ (greatest number of beams), and use that number as the overall cascade system response time.

$$Ds = K(Ts + Tr) + Dpf$$

where

$$Tr = Tr_{(max)} + 6\ ms$$

The 6 ms adder increases the safety distance (Ds) a total of 10 mm (0.4 in) when using 1600 mm/s for the hand speed constant K (see "Calculating the Safety Distance (Minimum Distance)" on page 28).

10.3.2 Individual Response Time and Safety (Minimum) Distance

When calculating the individual safety distance for each emitter/receiver pair, the pair's position in the cascade affects its response time, which then affects its safety distance (see safety distance formulas in "Calculating the Safety Distance (Minimum Distance)" on page 28). The individual method results in an optimized safety distance for each light curtain in the cascade, while ensuring that each sensor pair is located at an adequate distance from the hazard.

The response time depends on how far the light curtain is from the machine control. Each light curtain position in the cascade, starting from the first light curtain in the cascade that is connected to the machine control, increases the light curtain's response time by 2 ms. To calculate response time (Tr) for individual placement of each emitter/receiver pair in the cascaded system, use the following formulas:

$$\textbf{Position \#1: } Tr_{(cascade1)} = Tr$$

$$\textbf{Position \#2: } Tr_{(cascade2)} = Tr + 2\ ms$$

$$\textbf{Position \#3: } Tr_{(cascade3)} = Tr + 4\ ms$$

$$\textbf{Position \#4: } Tr_{(cascade4)} = Tr + 6\ ms$$

10.3.3 CSSI Response Time

When contacts (such as an E-stop button) are connected to the CSSI cascaded receiver input, the CSSI response time is 40 ms plus 2 ms for each additional light screen (slave pairs).

This is an example of a four-sensor pair, cascade system with the individual response times calculated for each of the sensor pairs. Light screens of other lengths/resolutions will have different response times.

The 23 mm resolution, 560 mm EZ-SCREEN LS emitter/receiver pairs each begin with a response time of 11.6 ms. The pair in position #1 (connected directly to the machine control), maintains its 11.6 ms response time. Response time for the second pair in the cascade circuit increases by 2 ms, to 13.6 ms; for the third pair by 4 ms, to 15.6 ms, and for the fourth pair by 6 ms, to 17.6 ms.

© Banner Engineering Corp. All rights reserved.
www.bannerengineering.com

Figure 52. Individual Response Time Calculation Example

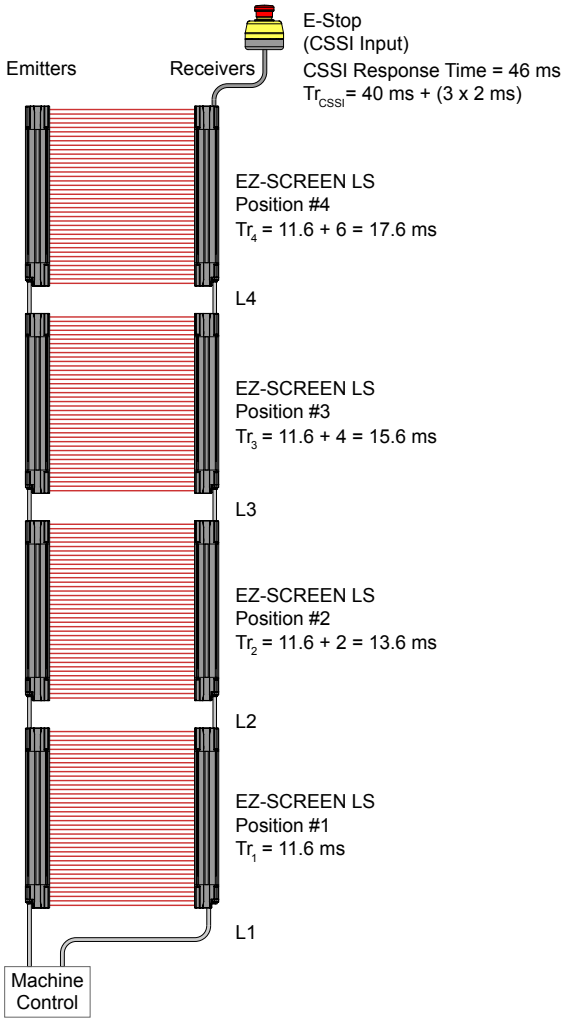

10.4 Emergency Stop Buttons in Cascaded Systems

Cascadeable EZ-SCREEN LS receivers may be connected to one or more E-stop buttons. The button(s) must connect to the end of the last receiver in the cascade, in place of the terminator plug. The connected E-stop button(s) will activate/deactivate the OSSD outputs in all receivers in the cascade.

The number of E-stop buttons allowed in a series connection is limited by the total resistance per channel. The total resistance is the sum of all contact resistance values in the channel, plus the total wire resistance in the channel. The maximum total resistance per channel is 100 Ω.

The CSSI input is a two-channel (4-wire) input such that the redundant channels must be in the same state (either open or closed). The CSSI input can be connected to hard/relay contacts per requirements. The simultaneity between the two contacts, on opening and closing, is 3 seconds. If simultaneity is not met, the last receiver's display will flash . If simultaneity is not met, to clear the fault condition, close both inputs (for example, close the guard), wait 3 seconds, and open both channels within 3 seconds, then both contacts can be closed again.

WARNING:

- **Do not mute or bypass any emergency stop device**
- Muting or bypassing the safety outputs renders the emergency stop function ineffective.
- ANSI B11.19, NFPA 79 and IEC/EN 60204-1 require that the emergency stop function remains active at all times.

© Banner Engineering Corp. All rights reserved.
www.bannerengineering.com

10.4.1 E-Stop Switch Requirements (Positive-Opening)

As shown in "Figure: Connecting of E-stop buttons to the last receiver in the cascade on page 83, the E-stop switch must provide two contact pairs, which are closed when the switch is in the armed position. Once activated, the E-stop switch must open its contacts and return to the closed-contact position only after deliberate action (such as twisting, pulling, or unlocking). The switch should be a positive-opening type, as described by IEC947-5-1. A mechanical force applied to such a button (or switch) is transmitted directly to the contacts, forcing them open. This ensures that the switch contacts will open whenever the switch is activated. ANSI/NFPA 79 specifies the following additional requirements:

- Emergency Stop push buttons shall be located at each operator control station and at other operating stations where emergency shutdown shall be required
- Stop and Emergency Stop push buttons shall be continuously operable from all control and operating stations where located
- Actuators of Emergency Stop devices shall be colored Red. The background immediately around the device actuator shall be colored Yellow. The actuator of a push-button-operated device shall be of the palm or mushroom-head type
- The Emergency Stop actuator shall be a self-latching type

NOTE: Some applications may have additional requirements. The user must comply with all relevant regulations.

WARNING: Multiple Emergency Stop Switches

When two or more E-stop switches are connected to the same EZ-SCREEN LS Safety Light Curtain receiver, the contacts of the E-stop switches must be connected together in series. This series combination is then wired to the respective EZ-SCREEN LS Safety Light Curtain receiver input.

Do not connect the contacts of multiple E-stop switches in parallel to the EZ-SCREEN LS Safety Light Curtain inputs; this defeats the switch contact monitoring ability of the EZ-SCREEN LS Safety Light Curtain light curtain, and creates an unsafe condition which could result in serious bodily injury or death.

In addition, when two or more E-stop switches are used, each switch must be individually actuated (engaged), then re-armed and reset the machine's safety-related control system. This allows the monitoring circuits to check each switch and its wiring to detect faults. Failure to test each switch individually in this manner could result in undetected faults and create an unsafe condition which could result in serious bodily injury or death.

WARNING:

- **Reset routine required**
- Failure to prevent the machine from restarting without actuating the normal start command/device can create an unsafe condition that could result in serious injury or death.
- Do not allow the machine to restart without actuating the normal start command/device. Perform the reset routine after clearing the cause of a stop condition, as required by U.S. and international standards.

© Banner Engineering Corp. All rights reserved.
www.bannerengineering.com

Figure 53. Connecting of E-stop buttons to the last receiver in the cascade

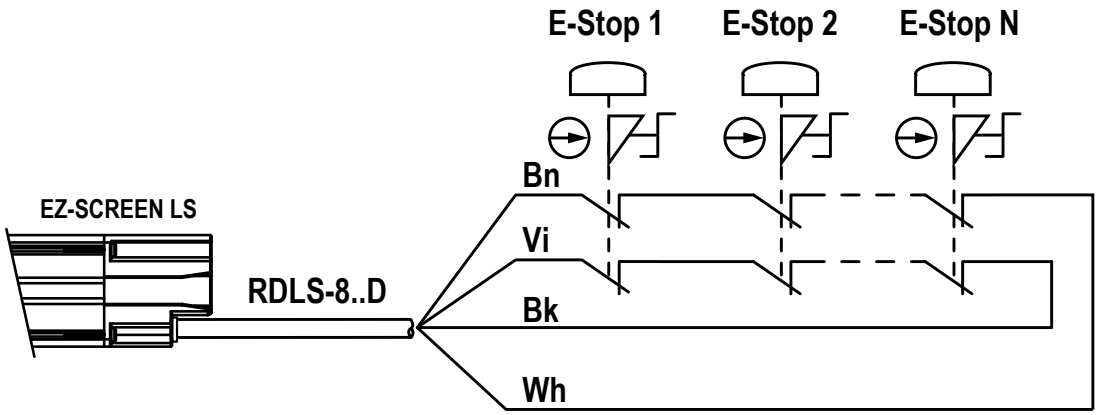

RDLS-8..D Pinout	
Brown	Ch1a
Orn/Blk	n.c.
Orange	n.c.
White	Ch1b
Black	Ch2b
Blue	n.c.
Gn/Ye	n.c.
Violet	Ch2a

Take precautions to prevent unused wires from shorting to ground or to other sources of energy (for example, terminate with wire-nut).

10.5 Interlock Switches in Cascaded Systems

The Cascade input may be used to monitor interlock safety gates or guards. Requirements vary widely for the level of control reliability or safety category (per ISO 13849-1) in the application of interlocked guards. While Banner Engineering recommends the highest level of safety in any application, the user is responsible to safely install, operate, and maintain each safety system, and comply with all relevant laws and regulations. Of the following applications, "Figure: Monitoring two positive-opening safety switches on page 85 meets or exceeds the requirements for OSHA/ANSI control reliability and Safety Category 4, per ISO 13849-1.

The CSSI input is a two-channel (4-wire) input such that the redundant channels must be in the same state (either open or closed). The CSSI input can be connected to hard/relay contacts per requirements. The simultaneity between the two contacts, on opening and closing, is 3 seconds. If simultaneity is not met, the last receiver's display will flash . If simultaneity is not met, to clear the fault condition, close both inputs (for example, close the guard), wait 3 seconds, and open both channels within 3 seconds, then both contacts can be closed again.

WARNING:

- **The hazard must be accessible only through the sensing field**
- Incorrect system installation could result in serious injury or death.
- The installation of the EZ-SCREEN LS must prevent any individual from reaching around, under, over or through the defined area and into the hazard without being detected.
- See OSHA CFR 1910.217, ANSI B11.19, and/or ISO 14119, ISO 14120 and ISO 13857 for information on determining safety distances and safe opening sizes for your guarding device. Mechanical barriers (for example, hard (fixed) guarding) or supplemental safeguarding might be required to comply with these requirements.

© Banner Engineering Corp. All rights reserved.
www.bannerengineering.com

10.5.1 Interlock Guarding Requirements

The following general requirements and considerations apply to the installation of interlocked gates and guards for the purpose of safeguarding. Refer to the relevant regulations to be sure to comply with all necessary requirements.

Hazards guarded by the interlocked guard must be prevented from operating until the guard is closed. A Stop command must be issued to the guarded machine if the guard opens while the hazard is present. Closing the guard must not, by itself, initiate hazardous motion; a separate procedure must be required to initiate the motion. The safety switches must not be used as a mechanical or end-of-travel stop.

The guard must be located at an adequate distance from the danger zone (so the hazard has time to stop before the guard is opened sufficiently to provide access to the hazard), and it must open either laterally or away from the hazard, not into the safeguarded area. Depending on the application, an interlocked gate or door should not be able to close by itself and activate the interlocking circuitry. In addition, the installation must prevent personnel from reaching over, under, around, or through the guard to the hazard. Any openings in the guard must not allow access to the hazard (see ANSI B11.19 or the appropriate standard). The guard must be strong enough and designed to protect personnel and contain hazards within the guarded area, which may be ejected, dropped, or emitted by the machine.

The safety switches and actuators used with the cascaded system must be designed and installed so that they cannot be easily defeated. They must be mounted securely, so that their physical position cannot shift, using reliable fasteners that require a tool to remove. Mounting slots in the housings are for initial adjustment only; final mounting holes must be used for permanent location.

10.5.2 Positive-Opening Interlocking Safety Switches

Two individually mounted safety interlock switches are recommended for each guard to meet Category 4, per ISO 13849-1, and must satisfy several requirements. Each switch must provide at minimum, one normally closed (N.C.) electrically isolated contact to interface with the Cascade input ("Figure: Monitoring two positive-opening safety switches on page 85).

The contacts must be of positive-opening design, with one or more normally closed contacts rated for safety. Positive-opening operation causes the switch to be forced open, without the use of springs, when the switch actuator is disengaged or moved from its home position. In addition, the switches must be mounted in a positive state to move/disengage the actuator from its home position and open the normally closed contact when the guard opens.

Series-connected, positive-opening interlock switch circuits do not meet ISO 13849-1 Category 4 and may not meet Control Reliability requirements because of the potential of an inappropriate reset or a potential loss of the safety stop signal. A multiple connection of this type should not be used in applications where loss of the safety stop signal or an inappropriate reset could lead to serious injury or death.

WARNING:

- **Connecting safety switches in series**
- Monitoring multiple guards with a series connection of multiple safety interlock switches is not a Safety Category 4 Application (per ISO 13849-1). A single failure can be masked or not detected at all. The loss of a safety stop signal or an inappropriate reset can lead to serious injury or death.
- When such a configuration is used, procedures must be performed regularly to verify proper operation of each switch. Correct all failures immediately (for example, immediately replace a failed switch).

© Banner Engineering Corp. All rights reserved.

Figure 54. Monitoring two positive-opening safety switches

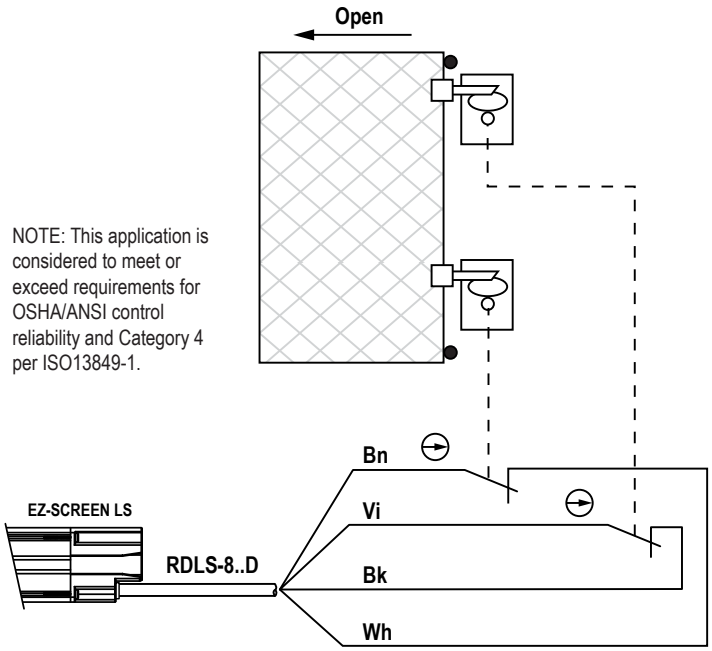

RDLS-8..D Pinout	
Brown	Ch1a
Orn/Blk	n.c.
Orange	n.c.
White	Ch1b
Black	Ch2b
Blue	n.c.
Gn/Ye	n.c.
Violet	Ch2a

Take precautions to prevent unused wires from shorting to ground or to other sources of energy (for example, terminate with wire-nut).

10.6 Remote TEACH Fixed Blanking (Wiring)

See "Programming Key Switch Location" on page 50 for complete instructions.

A key-actuated switch provides some supervisory control since the key can be removed from the switch. The Programming Key Switch must be located:

- Located outside the guarded area,
- Located to allow the switch operator full unobstructed view of the entire defined area, and
- Protected against unauthorized or inadvertent operation.

DELSEF-81D Wiring. RD-to-M12 QD double-ended 300 mm (1') cordset in combination with EZA-RBK-1 Remote Blanking Key Switch, and DEE2R-8..D Doubled-ended cordsets to extend the position.

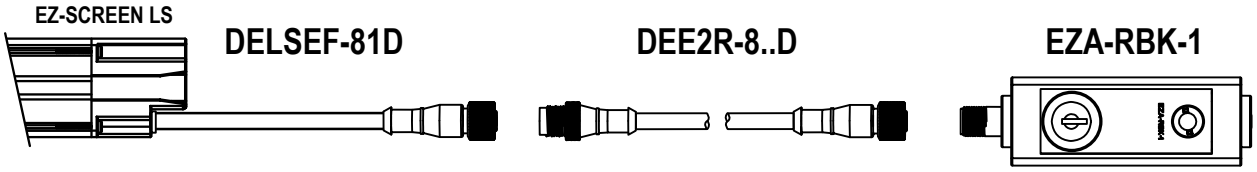

RDLS-8..D Wiring. RD-to-flying lead cordset can be used to directly wire to a SPDT (form C) switch and a separate indication device. Take precautions to prevent unused wires from shorting to ground or to other sources of energy (for example, terminate with wire-nut).

© Banner Engineering Corp. All rights reserved.
www.bannerengineering.com

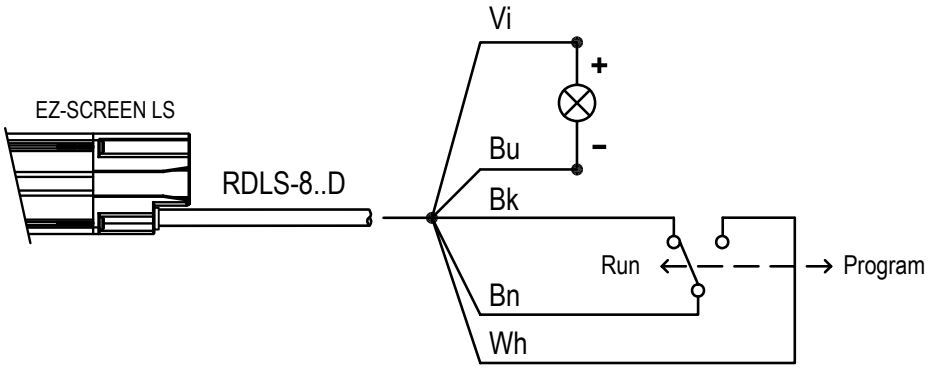

© Banner Engineering Corp. All rights reserved.
www.bannerengineering.com

Chapter Contents

11.1 Cordsets 87
11.2 AC Interface Boxes 92
11.3 Universal (Input) Safety Modules 92
11.4 Safety Controllers 93
11.5 Muting Module 93
11.6 Interface Modules 93
11.7 Contactors 93
11.8 Optional Mounting Brackets 94
11.9 Remote Blanking Key Switch Box 95
11.10 Alignment Aids 96
11.11 Snap-On Lens Shields 96
11.12 Tubular Enclosures 96
11.13 EZ-SCREEN LS Safety Light Curtain in an IP69K Hygienic Housing 97
11.14 EZ-LIGHTS® for EZ-SCREEN® 97
11.15 SSM Series Corner Mirrors 99
11.16 MSA Series Stands 100
11.17 Muting Accessories 101

Chapter 11 Accessories

11.1 Cordsets

Machine interface cordsets provide power to the first emitter/receiver pair. Sensor interconnect cables provide power to subsequent emitters and receivers in the cascade. Cordsets typically have yellow PVC cables and black overmolds.

A removable disconnect (RD) is required to connect directly to the sensor housing. QD connectors are used for cable-to-cable interconnections and connections to other devices.

Single-ended (to connect to the machine interface):

RDLS-8..D RD-to-flying leads is used with sensors without a 300 mm pigtail M12 QD
QDE-8..D QD-to-flying leads is used with sensors with a 8-pin 300 mm pigtail M12 QD (model ends in P8)
QDE-5..D QD-to-flying leads is used with sensors with a 5-pin 300 mm pigtail M12 QD (model ends in P5)

Double-ended

DELS-11..E RD-to-RD is used for sensor interconnect in a cascading system
DEE2R-8..D M12 QD-to-M12 QD (female-male) is used for extending the length of cordsets and directly connects to other devices with a 8-pin M12 QD
DEE2R-5..D M12 QD-to-M12 QD (female-male) is used for extending the length of cordsets and directly connects to other devices with a 5-pin M12 QD
MQDEC-4..SS M12 QD-to-M12 QD (female-male) is used for connecting to devices that do not have earth ground on pin 5 of a 5-pin QD (In such situations, earth ground must be provided via the mounting brackets)
DELSE-81D RD-to M12 QD (male) is used to create or replace an 8-pin 300 mm pigtail M12 QD
DELSE-51D RD-to M12 QD (male) is used to create or replace a 5-pin 300 mm pigtail M12 QD
DELSEF-81D RD-to M12 QD (female) is used for remote teach fixed blanking programming
DELSEF-4..D RD-to M12 QD (female) is used for connecting two-color EZ-LIGHT or other indicators

Splitter cordsets

CSB-M128..M1281 allow easy interconnection between an 8-pin receiver and 8-pin emitter, and provides a single trunk cable for the optional interchangeable ("swapable") hookup
CSB-M125..M1251 allow easy interconnection between a 5-pin receiver and 5-pin emitter, and provides a single trunk cable for the optional interchangeable ("swapable") hookup

NOTE: See "Routing Cordsets" on page 45 for maximum cordset lengths.

© Banner Engineering Corp. All rights reserved.
www.bannerengineering.com

EZ-SCREEN LS Connection Examples

Figure 55. 300 mm Pigtail with M12 QD

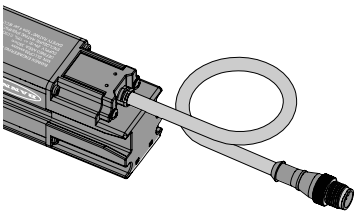

Figure 56. RD Connection with 8-Wire Flying Lead Cordset

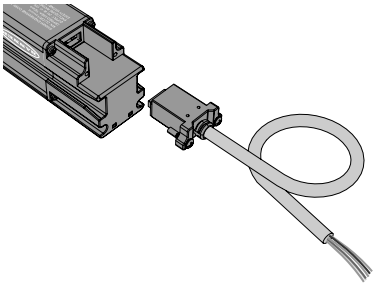

Figure 57. RD Connection with Double-Ended RD Cordset

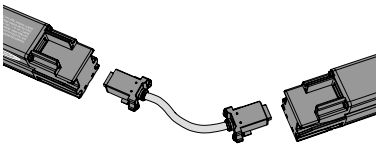

11.1.1 Single-Ended (Machine Interface) Cables

Typically you use one cordset for each emitter and receiver.

RDLS-8..D 8-wire single-ended cordsets—Use RD-to-flying lead cordsets with sensors without a 300 mm cable M12 QD			
Model	**Length**	**Pinout/Color Code**	**Product Image**
RDLS-815D	4.6 m (15.1 ft)	Brown: 24 V DC Or/Bk: Fault Orange: Emitter: ID in; Receiver: EDM White: Emitter: no connection; Receiver: OSSD2 Black: Emitter: no connection; Receiver: OSSD1 Blue: 0 V DC Gn/Ye: Ground/Chassis Violet: Scan Code	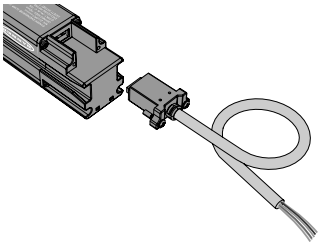
RDLS-825D	8 m (26.2 ft)		
RDLS-850D	15.3 m (50.2 ft)		

QDE-5..D 5-pin M12 QD to flying lead cordsets—Use QDE-5... cordsets with sensors that have a 300 mm cable and 5-pin M12 quick disconnect (models ending in P5). These cordsets have a M12 QD connector on one end and are unterminated (cut to length) on the other end to interface with guarded machine. PVC jacketed overmold and cables.			
Model	**Length**	**Banner Cordset Pinout/Color Code**	**M12 Connector (female face view)**
QDE-515D	4.5 m (15 ft)	Pin 1 (Brown): 24 V DC Pin 2 (White): Emitter: no connection; Receiver: OSSD2 Pin 3 (Blue): 0 V DC Pin 4 (Black): Emitter: no connection; Receiver: OSSD1 Pin 5 (Gn/Ye): Ground/chassis	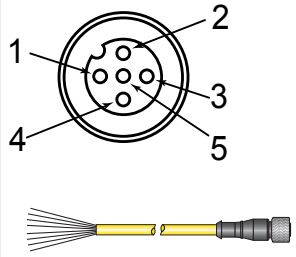
QDE-525D	7.6 m (25 ft)		
QDE-550D	15.2 m (50 ft)		
QDE-575D	22.8 m (75 ft)		
QDE-5100D	30.4 m (100 ft)		

© Banner Engineering Corp. All rights reserved.
www.bannerengineering.com

QDE-8..D 8-pin M12 QD to flying lead cordsets—Use QDE-8... cordsets with sensors that have a 300 mm cable and 8-pin M12 quick disconnect (models ending in P8). This cordset has a M12 QD connector on one end and is unterminated (cut to length) on the other end to interface with guarded machine. PVC jacketed overmold and cables.			
Model	**Length**	**Banner Cordset Pinout/Color Code**	**M12 Connector (female face view)**
QDE-815D	4.5 m (15 ft)	Pin 1 (Brown): 24 V DC Pin 2 (Or/Bk): Fault Pin 3 (Orange): Emitter: ID in; Receiver: EDM Pin 4 (White): Emitter: no connection; Receiver: OSSD2 Pin 5 (Black): Emitter: no connection; Receiver: OSSD1 Pin 6 (Blue): 0 V DC Pin 7 (Gn/Ye): Ground/chassis Pin 8 (Violet): Scan code	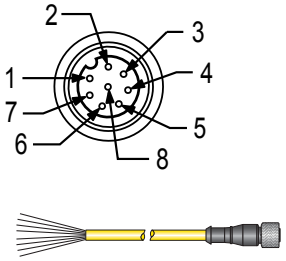
QDE-825D	7.6 m (25 ft)		
QDE-850D	15.2 m (50 ft)		
QDE-875D	22.8 m (75 ft)		
QDE-8100D	30.4 m (100 ft)		

11.1.2 Double-Ended (Sensor Interconnect) Cordsets

Double ended cordsets are generally used to interconnect multiple emitters or receivers within a cascade system. They are also useful for extending either the branch or trunk cables of a model CSB splitter cordset used in sensor "swapability" installations.

DELS-11..E RD-to-RD cordset—Use the DELS-11... cordsets for sensors interconnecting in a cascading system.		
Model	**Length**	**Product Image**
DELS-110E	0.07 m (0.2 ft)	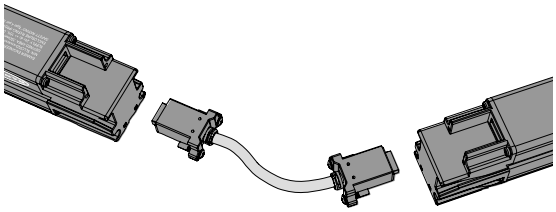
DELS-111E	0.3 m (1 ft)	
DELS-113E	1 m (3.3 ft)	
DELS-118E	2.5 m (8.2 ft)	
DELS-1115E	4.6 m (15.1 ft)	
DELS-1125E	8 m (26.2 ft)	
DELS-1150E	15.3 m (50.2 ft)	

DEE2R-8..D 8-pin M12 QD to M12 QD (female-male) cordsets—Use the DEE2R-8... cordsets to extend the length of cordsets and directly connect to other devices with an 8-pin M12 quick disconnect. Other lengths are available.			
Model	**Length**	**Banner Cordset Pinout/Color Code**	**M12 Connector (female face view)**
DEE2R-81D	0.3 m (1 ft)	Pin 1 (Brown): 24 V DC Pin 2 (Or/Bk): Fault Pin 3 (Orange): Emitter: ID in; Receiver: EDM Pin 4 (White): Emitter: no connection; Receiver: OSSD2 Pin 5 (Black): Emitter: no connection; Receiver: OSSD1 Pin 6 (Blue): 0 V DC Pin 7 (Gn/Ye): Ground/Chassis Pin 8 (Violet): Scan code	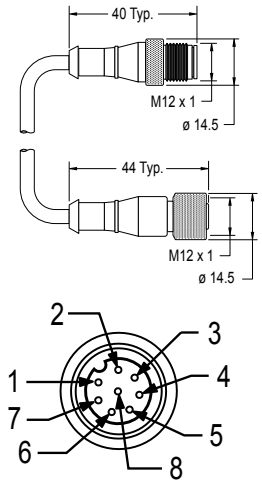
DEE2R-83D	0.9 m (3 ft)		
DEE2R-88D	2.5 m (8 ft)		
DEE2R-812D	3.6 m (12 ft)		
DEE2R-815D	4.6 m (15 ft)		
DEE2R-825D	7.6 m (25 ft)		
DEE2R-830D	9.1 m (30 ft)		
DEE2R-850D	15.2 m (50 ft)		
DEE2R-875D	22.9 m (75 ft)		
DEE2R-8100D	30.5 m (100 ft)		

© Banner Engineering Corp. All rights reserved.
www.bannerengineering.com

DEE2R-5..D 5-pin M12 QD to M12 QD (female-male) cordsets—Use the DEE2R-5... cordsets to extend the length of cordsets and directly connect to other devices with a 5-pin M12 quick disconnect. Other lengths are available.

Model	Length	Banner Cordset Pinout/Color Code	M12 Connector (female face view)
DEE2R-51D	0.3 m (1 ft)	Pin 1 (Brown): 24 V DC Pin 2 (White): Emitter: no connection; Receiver: OSSD2 Pin 3 (Blue): 0 V DC Pin 4 (Black): Emitter: no connection; Receiver: OSSD1 Pin 5 (Gn/Ye): Ground/Chassis	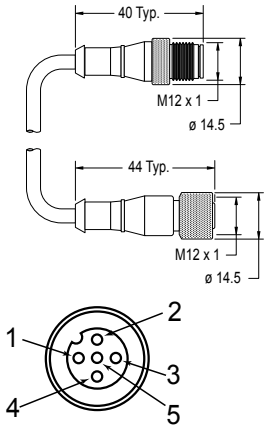
DEE2R-53D	0.9 m (3 ft)		
DEE2R-58D	2.5 m (8 ft)		
DEE2R-515D	4.6 m (15 ft)		
DEE2R-525D	7.6 m (25 ft)		
DEE2R-550D	15.2 m (50 ft)		
DEE2R-575D	22.9 m (75 ft)		
DEE2R-5100D	30.5 m (100 ft)		

MQDEC-4xxSS 4-pin M12 QD to M12 QD (female-male) cordsets—Use MQDEC-4...SS cordsets to connect to devices that do not or cannot have earth ground on pin 5 of a 5-pin QD. In such situations, earth ground must be provided via the mounting brackets. These cordsets have black PVC cables and black overmolds. The female M12 QD connector has a empty hole (no connection) in the pin 5 position to allow mating with a 5-pin male QD.

Model	Length	Banner Cordset Pinout/Color Code	M12 Connector (female face view)
MQDEC-401SS	0.3 m (1 ft)	Pin 1 (Brown): 24 V DC Pin 2 (White): Emitter: no connection; Receiver: OSSD2 Pin 3 (Blue): 0 V DC Pin 4 (Black): Emitter: no connection; Receiver: OSSD1 Pin 5 (n/a): No connection	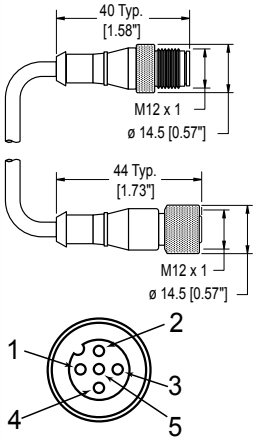
MQDEC-403SS	0.9 m (3 ft)		
MQDEC-406SS	1.8 m (6 ft)		
MQDEC-412SS	3.6 m (12 ft)		
MQDEC-420SS	6.1 m (20 ft)		
MQDEC-430SS	9.2 m (30 ft)		
MQDEC-450SS	15.2 m (50 ft)		

DELSE-..1D RD to M12 QD (male) cordsets—Use DELSE-..1D cordsets to create or replace a 300 mm pigtail M12 quick disconnect (models ending in P8 or P5).

Model	Length	Banner Cordset Pinout/Color Code	
DELSE-81D	0.3 m (1 ft)	Pin 1 (Brown): 24 V DC Pin 2 (Or/Bk): Fault Pin 3 (Orange): Emitter: ID in; Receiver: EDM Pin 4 (White): Emitter: no connection; Receiver: OSSD2 Pin 5 (Black): Emitter: no connection; Receiver: OSSD1 Pin 6 (Blue): 0 V DC Pin 7 (Gn/Ye): Ground/Chassis Pin 8 (Violet): Scan code	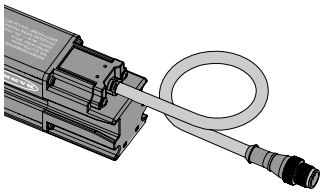
DELSE-51D	0.3 m (1 ft)	Pin 1 (Brown): 24 V DC Pin 2 (White): Emitter: no connection; Receiver: OSSD2 Pin 3 (Blue): 0 V DC Pin 4 (Black): Emitter: no connection; Receiver: OSSD1 Pin 5 (Gn/Ye): Ground/Chassis	

© Banner Engineering Corp. All rights reserved.
www.bannerengineering.com

DELSEF-81D RD to M12 QD (female) cordset—Use DELSEF-81D cordsets for remote teach fixed blanking programming (see "Remote Blanking Key Switch Box" on page 95 for list of EZA-RBK-1 Remote Blanking Key Switch).			
Model	**Length**	**Banner Cordset Pinout/Color Code**	
DELSEF-81D	0.3 m (1 ft)	Pin 1 (Brown): RUN/PROG Common Pin 2 (Or/Bk): no connection Pin 3 (Orange): no connection Pin 4 (White): PROGRAM (normally open) Pin 5 (Black): RUN (normally closed) Pin 6 (Blue): 0 V DC Pin 7 (Gn/Ye): no connection Pin 8 (Violet): Indicator (+V)	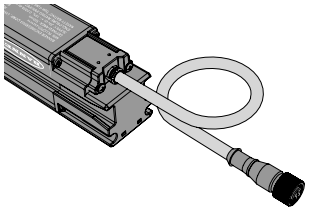

DELSEF-4..D 4-pin RD to M12 QD (female) cordsets—Use DELSEF-4..D cordsets for connecting one or two-color EZ-LIGHTs or other indicators (see "EZ-LIGHTS® for EZ-SCREEN®" on page 97 for list of EZ-LIGHTS).			
Model	**Length**	**Banner Cordset Pinout/Color Code**	
DELSEF-40D	0.07 m (0.2 ft)	Pin 1 (Brown): OSSD OFF/FAULT (red) Pin 2 (White): no connection Pin 3 (Blue): 0 V DC Pin 4 (Black): OSSD ON (green)	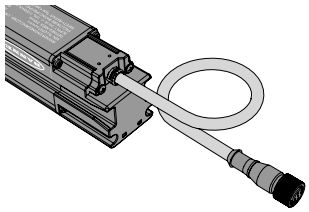
DELSEF-41D	0.3 m (1 ft)		
DELSEF-43D	1 m (3.3 ft)		
DELSEF-48D	2.5 m (8.2 ft)		
DELSEF-415D	4.6 m (15.1 ft)		

11.1.3 Splitter Cordsets

Model CSB splitter cordsets allow easy interconnection between an EZ-SCREEN 8-pin receiver and its 8-pin emitter, providing a single trunk cable for the optional "swapable" hookup. The model DEE2R-.. double-ended cables may be used to extend the lengths of the QD trunk, branch #1, or branch #2. Branch #1 and branch #2 cable sections are 300 mm (11.8 in) long. The model QDE-8..D single-ended cables may be used to extend the QD trunk for cut-to-length applications.

8-Pin Splitter Cordsets—Allows easy interconnection between an 8-pin receiver and 8-pin emitter, and provides a single trunk cable for the optional interchangeable ("swapable") connection.

8-Pin M12 Female Branch to Male Trunk Flat Junction Splitter Cordsets			
Model	**Trunk (Male)**	**Branches (Female)**	**Pinout**
CSB-M1280M1280	No trunk	No branches	Male 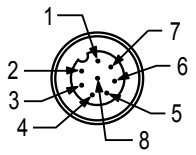 Female 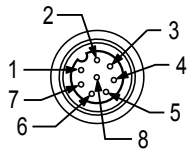 1 = Brown 2 = Or/Bk 3 = Orange 4 = White 5 = Black 6 = Blue 7 = Gn/Ye 8 = Violet
CSB-M1281M1281	0.3 m (1 ft)	2 x 0.3 m (1 ft)	
CSB-M1288M1281	2.44 m (8 ft)		
CSB-M12815M1281	4.57 m (15 ft)		
CSB-M12825M1281	7.62 m (25 ft)		
CSB-UNT825M1281	7.62 m (25 ft) Unterminated		
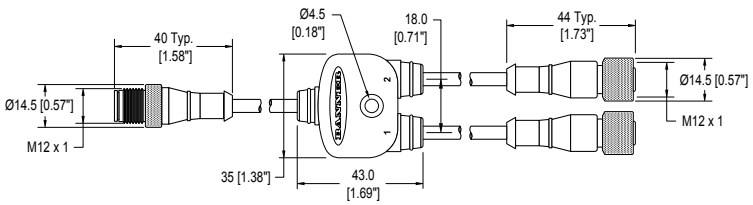			

5-Pin Splitter Cordsets—Allows easy interconnection between an 5-pin receiver and 5-pin emitter, and provides a single trunk cable for the optional interchangeable ("swapable") connection.

© Banner Engineering Corp. All rights reserved.
www.bannerengineering.com

5-Pin Double-Ended M12 Female to M12 Male Splitter Flat Junction Cordsets				
Model	**Trunk (Male)**	**Branches (Female)**	**Pinout (Male)**	**Pinout (Female)**
CSB-M1251M1251	0.3 m (0.98 ft)	2 x 0.3 m (0.98 ft)	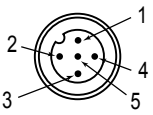	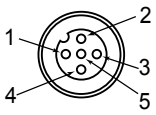
CSB-M12515M1251	4.57 m (15 ft)			
CSB-M12525M1251	7.62 m (25 ft)			
CSB-UNT525M1251	7.62 m (25 ft) Unterminated			
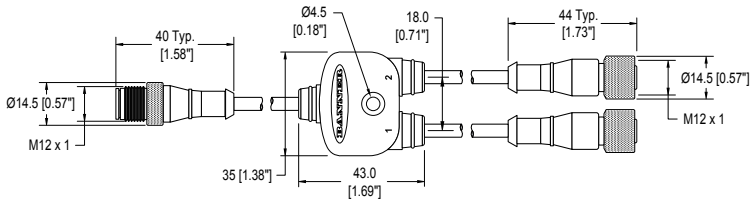			1 = Brown 2 = White 3 = Blue	4 = Black 5 = Green/Yellow

11.1.4 Bulkhead Connector

Connector for panel connection of EZ-SCREEN LS component cables.

Model	Connection	Dimensions
PMEF-810D	8-pin M12 female connector 3 m (10 ft) wires, cut to length (Banner color code); 22 AWG/0.33 mm²	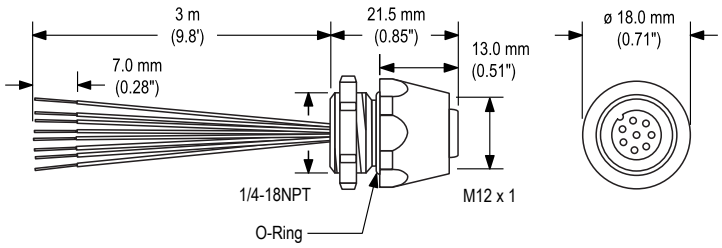

11.2 AC Interface Boxes

The AC interface box is for use with EZ-SCREEN LS emitters and/or receivers. **EZAC-R..A** models can supply +24 V DC to one EZ-SCREEN LS receiver, a single emitter-receiver pair, or up to three cascaded emitter/receiver pairs. The interface box supplies +24 V DC power at 0.7 amps (16.8 W maximum power) and accepts input voltages from 100 V AC to 230 V AC (50 Hz to 60 Hz). See datasheet p/n 194317 for more information.

Model	Outputs	EDM	Emitter/Receiver Connection	AC Power Connection	Output and EDM Connections
EZAC-R9A-QE8	3 normally open (N.O.)	1-Channel or a jumper added for no EDM	8-Pin M12 QD	Hard-wired	Hard-wired
EZAC-R11A-QE8	2 normally open (N.O.) and 1 normally closed (N.C.) auxilliary				

11.3 Universal (Input) Safety Modules

UM-FA-xA Safety Modules are safety monitoring devices that provide forced-guided, mechanically-linked relay (safety) outputs for the EZ-SCREEN LS system with a 5-pin interconnect (P5) or 8-pin interconnect (P8) when a manual reset (latch) is required by the application. See datasheet p/n 141249 for more information.

Model	Description
UM-FA-9A	3 normally open (N.O.) redundant-output 6 amp contacts

Continued on page 93

© Banner Engineering Corp. All rights reserved.
www.bannerengineering.com

Continued from page 92

Model	Description
UM-FA-11A	2 normally open (N.O.) redundant-output 6 amp contacts, plus 1 normally closed (N.C.) auxiliary contact

11.4 Safety Controllers

Safety Controllers provide a fully configurable, software-based safety logic solution for monitoring safety and non-safety devices.

For additional models and XS26 expansion modules, see instruction manual p/n 174868.

Table 18. Safety controller models

Non-Expandable Models	Expandable Models	Description
SC26-2	**XS26-2**	26 convertible I/O and 2 redundant solid-state safety outputs
SC26-2d	**XS26-2d**	26 convertible I/O and 2 redundant solid-state safety outputs with display
SC26-2e	**XS26-2e**	26 convertible I/O and 2 redundant solid-state safety outputs with Ethernet
SC26-2de	**XS26-2de**	26 convertible I/O and 2 redundant solid-state safety outputs with display and Ethernet
SC10-2roe		10 inputs, 2 redundant relay safety outputs (3 contacts each) (ISD and Ethernet compatible)
	XS26-ISDd	26 inputs, 2 redundant solid-state safety outputs with display, Ethernet, and 8 ISD channels

11.5 Muting Module

Provides the muting capability for the EZ-SCREEN LS.

See Banner manual 116390 for more information and additional cabling options.

Model	Description	
MMD-TA-11B	DIN-mount Muting module	2 N.O. safety outputs (6 amps), 2 or 4 muting inputs, SSI, override input; IP20; terminal connections
MMD-TA-12B		2 OSSD outputs, 2 or 4 muting inputs, SSI, override input; IP20; terminal connections

11.6 Interface Modules

Interface modules provide forced-guided, mechanically-linked relay (safety) outputs for the EZ-SCREEN LS System with an 8-pin interconnect (with EDM function). The interface module is required to be monitored by the EDM function and should not be used with EZ-SCREEN LS with a 5-pin interconnection (P5). See the referenced Banner datasheets for more information.

Model	Description	Datasheet
IM-T-9A	Interface module, 3 normally open (N.O.) redundant-output 6 amp contacts, removable screw terminals	62822
IM-T-11A	Interface module, 2 normally open (N.O.) redundant-output 6 amp contacts, plus 1 normally closed (N.C.) auxiliary contact, removable screw terminals	
SR-IM-9A	Interface module, 3 normally open (N.O.) redundant-output 6 amp contacts, spring clamp terminals	208873
SR-IM-11A	Interface module, 2 normally open (N.O.) redundant-output 6 amp contacts, plus 1 normally closed (N.C.) auxiliary contact, spring clamp terminals	

11.7 Contactors

If used, two contactors are required per EZ-SCREEN LS System that is monitored by the EDM circuit and should not be used with the EZ-SCREEN LS with a 5-pin interconnection (P5) model. See Banner datasheet p/n 111881 for more information.

Model	Description
11-BG00-31-D-024	10 amp positive-guided contactor, 3 normally open (N.O.) and 1 normally closed (N.C.)
BF1801L024	18 amp positive-guided contactor, 3 normally open (N.O.) and 1 normally closed (N.C.) (N.C. contact rated at 10 amps)

© Banner Engineering Corp. All rights reserved.
www.bannerengineering.com

11.8 Optional Mounting Brackets

See "Replacement Parts" on page 102 for standard brackets. Contact Banner Engineering Corp. for more information.

EZA-MBK-2

- Adapter bracket for mounting SSM series mirror to MSA series stands

Hole center spacing: A = 63.9, B = 19.9, A to B = 22.0
Hole size: A = ø 8.3, B = ø 4.8

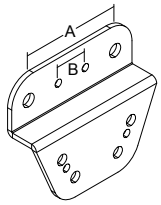

EZLSA-MBK-16

- Side-mounting bracket provides a mounting option that is fully adjustable (lateral and +15/-20° rotational) from the face of the sensor and allows "no blind zone" mounting with minimal or no "gaps" in detection.
- The bracket can be mounted to a surface on the back or the side of the sensor.
- Includes one bracket and hardware. Order two or three EZLSA-MBK-16 brackets per sensor.

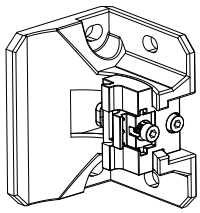

EZLSA-MBK-20

- Adapter brackets for mounting to engineered/slotted aluminum framing such as 80/20™ and Unistrut™
- Angled slots allow mounting to 20 mm to 40 mm dual channel and center slot; allows mounting to single channel framing
- Used to replace EZLSA-MBK-11 (which may be included with the emitter and receiver)
- Order one EZLSA-MBK-20 bracket per sensor, two per pair

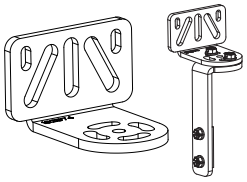

EZLSA-MBK-20 Dimensions

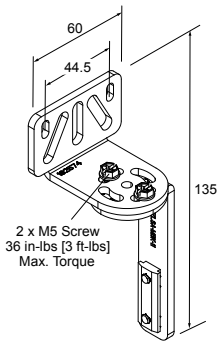

11.8.1 Installing the Side Mount Brackets

The following installation guide describes how to mount the EZLSA-MBK-16 side-mount brackets. See "Optional EZLSA-MBK-16 Side-Mount Bracket" on page 41 for more information.

© Banner Engineering Corp. All rights reserved.
www.bannerengineering.com

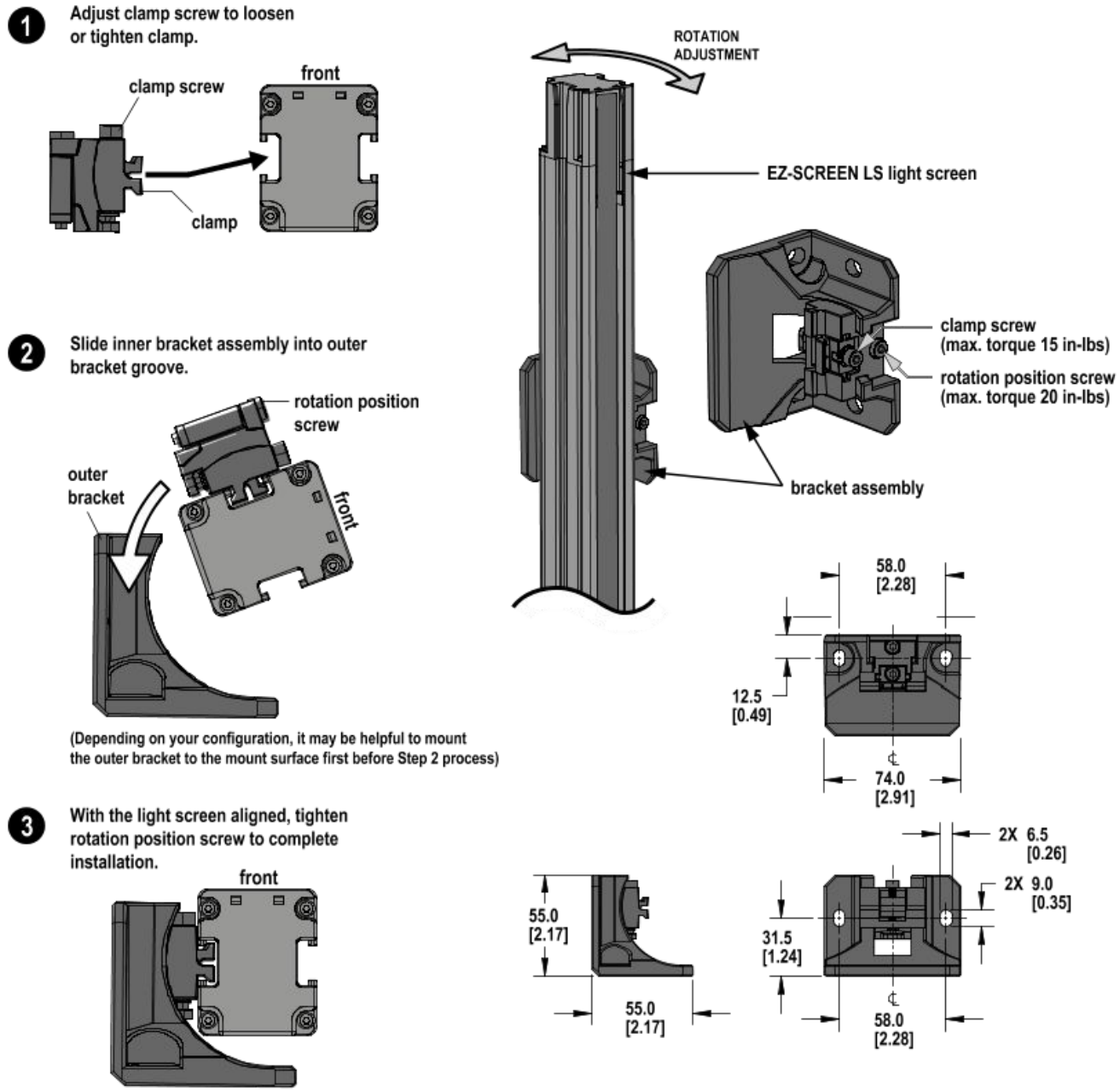

11.9 Remote Blanking Key Switch Box

Use the remote blanking key switch box to configure fixed blanking remotely on cascadeable model receivers.

The **DELSEF-81D cordset** interfaces with the receiver cascade end and the **DEE2R-8..D cordset** provides the required extension as needed.

© Banner Engineering Corp. All rights reserved.
www.bannerengineering.com

Model	Description	
EZA-RBK-1	Remote Blanking Key Switch; allows the configuration of a fixed blanked area	
EZA-RBK-K	Replacement key for Remote Blanking Key Switch **EZA-RBK-1**	

11.10 Alignment Aids

Model	Description	
LAT-1-SS	Self-contained visible-beam laser tool for aligning any EZ-SCREEN LS emitter/receiver pair. Includes retroreflective target material and mounting clip.	
EZA-LAT-SS	Replacement adaptor (clip) hardware for EZ-SCREEN LS models	
EZA-LAT-2	Clip-on retroreflective LAT target	
BRT-THG-2-100	2-inch retroreflective tape, 100 ft	
BT-1	Beam Tracker	

11.11 Snap-On Lens Shields

Impact-resistant copolyester lens shields snap easily over entire length of sensor housing, protecting against direct contact with fluids and solid debris. The lens shields are not sealed at top and bottom, and decrease sensing range by approximately 20% when they are protecting both the emitter and receiver. Order one per sensor.

Sensor Model	Lens Shield Model	Sensor Model	Lens Shield Model	
SLL..-280..	EZLS-280	SLL..-1050..	EZLS-1050	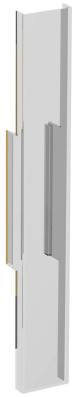
SLL..-350..	EZLS-350	SLL..-1120..	EZLS-1120	
SLL..-420..	EZLS-420	SLL..-1190..	EZLS-1190	
SLL..-490..	EZLS-490	SLL..-1260..	EZLS-1260	
SLL..-560..	EZLS-560	SLL..-1330..	EZLS-1330	
SLL..-630..	EZLS-630	SLL..-1400..	EZLS-1400	
SLL..-700..	EZLS-700	SLL..-1470..	EZLS-1470	
SLL..-770..	EZLS-770	SLL..-1540..	EZLS-1540	
SLL..-840..	EZLS-840	SLL..-1610..	EZLS-1610	
SLL..-910..	EZLS-910	SLL..-1680..	EZLS-1680	
SLL..-980..	EZLS-980	SLL..-1750..	EZLS-1750	
		SLL..-1820..	EZLS-1820	

11.12 Tubular Enclosures

The tubular enclosures include stainless mounting brackets and hardware and are:

- Ideal for high-pressure wash-down environments
- Made of clear FDA-grade polycarbonate tubing with acetal end caps
- Rated IEC IP67/IP69K

Using enclosures affects the sensing range of the emitter/receiver used: when in pairs, the range can be reduced by 30%. The EZA-MBK-2 adapter bracket is required for use with the MSA Series stand, see "MSA Series Stands" on page 100.

© Banner Engineering Corp. All rights reserved.
www.bannerengineering.com

Sensor Model	Tubular Enclosure Model	Sensor Model	Tubular Enclosure Model	
SLL..-280..	EZLSA-TE-280	SLL..-1050..	EZLSA-TE-1050	
SLL..-350..	EZLSA-TE-350	SLL..-1120..	EZLSA-TE-1120	
SLL..-420..	EZLSA-TE-420	SLL..-1190..	EZLSA-TE-1190	
SLL..-490..	EZLSA-TE-490	SLL..-1260..	EZLSA-TE-1260	
SLL..-560..	EZLSA-TE-560	SLL..-1330..	EZLSA-TE-1330	
SLL..-630..	EZLSA-TE-630	SLL..-1400..	EZLSA-TE-1400	
SLL..-700..	EZLSA-TE-700	SLL..-1470..	EZLSA-TE-1470	
SLL..-770..	EZLSA-TE-770	SLL..-1540..	EZLSA-TE-1540	
SLL..-840..	EZLSA-TE-840	SLL..-1610..	EZLSA-TE-1610	
SLL..-910..	EZLSA-TE-910	SLL..-1680..	EZLSA-TE-1680	
SLL..-980..	EZLSA-TE-980	SLL..-1750..	EZLSA-TE-1750	
		SLL..-1820..	EZLSA-TE-1820	

11.13 EZ-SCREEN LS Safety Light Curtain in an IP69K Hygienic Housing

- EZ-SCREEN LS emitters and receivers are factory-installed in the enclosures
- Hygienic design suited for food and beverage applications
- Made of clear FDA-grade polycarbonate tubing and stainless-steel end caps
- Rated IEC IP69K

Using enclosures affects the sensing range of the emitter/receiver used: when in pairs, the range can be reduced by 30%.

Sensor Model	Tubular Enclosure Model	
SLL..-280..	**EZLSA-HTE-E23-280** (Emitter) or **EZLSA-HTE-R23-280** (Receiver)	
SLL..-350..	**EZLSA-HTE-E23-350** (Emitter) or **EZLSA-HTE-R23-350** (Receiver)	
SLL..-420..	**EZLSA-HTE-E23-420** (Emitter) or **EZLSA-HTE-R23-420** (Receiver)	
SLL..-490..	**EZLSA-HTE-E23-490** (Emitter) or **EZLSA-HTE-R23-490** (Receiver)	
SLL..-560..	**EZLSA-HTE-E23-560** (Emitter) or **EZLSA-HTE-R23-560** (Receiver)	
SLL..-630..	**EZLSA-HTE-E23-630** (Emitter) or **EZLSA-HTE-R23-630** (Receiver)	
SLL..-700..	**EZLSA-HTE-E23-700** (Emitter) or **EZLSA-HTE-R23-700** (Receiver)	
SLL..-770..	**EZLSA-HTE-E23-770** (Emitter) or **EZLSA-HTE-R23-770** (Receiver)	
SLL..-840..	**EZLSA-HTE-E23-840** (Emitter) or **EZLSA-HTE-R23-840** (Receiver)	
SLL..-910..	**EZLSA-HTE-E23-910** (Emitter) or **EZLSA-HTE-R23-910** (Receiver)	
SLL..-980..	**EZLSA-HTE-E23-980** (Emitter) or **EZLSA-HTE-R23-980** (Receiver)	
SLL..-1050..	**EZLSA-HTE-E23-1050** (Emitter) or **EZLSA-HTE-R23-1050** (Receiver)	

11.14 EZ-LIGHTS® for EZ-SCREEN®

Provides clear, 360° indication of the EZ-SCREEN receiver's output status and receiver lockouts. EZ-LIGHT or other means of indication must draw less than 100 mA at 24 V DC.

© Banner Engineering Corp. All rights reserved.
www.bannerengineering.com

Figure 58. EZ-SCREEN LS with M18 EZ-LIGHT



Figure 59. EZ-SCREEN LS with EZLSA-K30LGR EZ-LIGHT

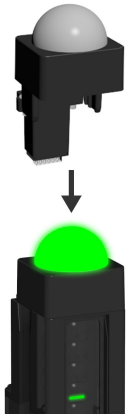

Figure 60. EZ-SCREEN LS with TL50 EZ-LIGHT



Standard Receivers (SLLR..-....P8)—Use with a CSB-M128..M1281 splitter cable and optional DEE2R-8..D double-ended cables. Use only EZ-LIGHT models with the suffix "8PQ8" when connecting to the machine interface connection. See datasheet p/n 121901 for more information.

Models		Construction	Connector/LED Function/Inputs
	**M18RGX8PQ8** [19]	Nickel-plated brass housing, M18 × 1 thread; thermoplastic lens Fully encapsulated IP67	8-pin M12 Integral QD Red/green indication follows OSSD output of the EZ-SCREEN receiver **Red ON**: Power ON, Beam Blocked, or Lockout **Green ON**: Power ON or Beam Clear
	**T18RGX8PQ8**	Thermoplastic polyester housing, thermoplastic lens Fully encapsulated IP67	
	**T30RGX8PQ8**		
	**K30LRGX8PQ8**	Polycarbonate housing, 30 mm thermoplastic dome, 22 mm base mount Fully encapsulated, IP67	
	**K50LRGX8PQ8**	Polycarbonate housing, 50 mm thermoplastic dome, 30 mm base mount Fully encapsulated, IP67	
	**K80LRGX8PQ8**	Polycarbonate housing, 50 mm thermoplastic dome, flat or DIN mount Encapsulated electronics, IP67	

[19] Available in a kit that includes one M18 EZ-LIGHT, one SMB18A mounting bracket, and hardware for mounting to the side channel of an EZ-SCREEN housing (kit model number **EZA-M18RGX8PQ8**).

© Banner Engineering Corp. All rights reserved.
www.bannerengineering.com

Cascade Receivers (SLLCR..-....)—Use a DELSEF-4..D RD-to-M12/Euro-style QD (4-pin) and optional DEE2R-5..D double-ended cables for remotely locating the EZ-LIGHT, or a EZLSA-K30LGR can be mounted directly to the CSSI connector.				
Model		**Construction**	**Connection**	**LED Function**
	**EZLSA-K30LGR**	• Base: ABS and Polycarbonate • Domes: Polycarbonate • IP67 • Indicates System Status • Adds 35 mm to the housing length (see "Dimensions" on page 26) • Patent Pending	Integral RDLS connector connects directly to SLLCR... receiver	**Green ON:** OSSDs On **Red ON:** OSSDs Off **Red Flashing:** Receiver lockout (OSSDs off)
	**K30LGRXPQ**	• Bases and Domes: Polycarbonate • 22.5 mm base mount • IP67, IP69K • Indicates System Status	4-pin M12 QD DELSEF-4..D	
	**K50LGRXPQ**	• Bases and Domes: Polycarbonate • 30 mm base mount • IP67, IP69K • Indicates System Status	4-pin M12 QD DELSEF-4..D	
	**K50FLGRXPQ**	• Bases and Domes: Polycarbonate • IP67, IP69K • Indicates System Status	4-pin M12 QD DELSEF-4..D	
	**K80LGRXPQ**	• Bases: ABS and Polycarbonate • Dome: Polycarbonate • IP67 • Indicates System Status		
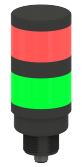	**TL50GRQ**	• Bases and Covers: ABS • Light Segment: Polycarbonate • 30 mm base mount • IP67 • Indicates System Status		

11.15 SSM Series Corner Mirrors

- Robust for heavy-duty applications.
- Extra wide for use with long-range optical safety systems.
- Rear-surface glass mirrors are rated at 85% efficiency. The total sensing range decreases by approximately 8% per mirror. See mirror datasheet p/n 61934 or www.bannerengineering.com for further information.
- To order the stainless steel reflective surface models, add the suffix **-S** (for example, **SSM-375-S**); range reduction for these models is approximately 30% per mirror. See datasheet p/n 67200.
- Robust construction, two mounting brackets and hardware included.
- In addition to the included SMA-MBK-1 brackets, an EZA-MBK-2 adapter bracket kit is required for use with MSA Series stands; refer to the mounting bracket accessories list.
- Brackets may be inverted from the positions shown, decreasing dimension L1 by 58 mm (2.3 in).

© Banner Engineering Corp. All rights reserved.
www.bannerengineering.com

Mirror Model	Reflective Area Height (Y)	Mounting Height (L1)[20]	Overall Height (L2)	
SSM-100-S	100 mm (3.9 in)	211 mm (8.3 in)	178 mm (7.0 in)	
SSM-150-S	150 mm (5.9 in)	261 mm (10.3 in)	228 mm (9.0 in)	
SSM-200-S	200 mm (7.9 in)	311 mm (12.2 in)	278 mm (10.9 in)	
SSM-250-S	250 mm (9.8 in)	361 mm (14.2 in)	328 mm (12.9 in)	
SSM-375-S	375 mm (14.8 in)	486 mm (19.1 in)	453 mm (17.8 in)	
SSM-475-S	475 mm (18.7 in)	586 mm (23.1 in)	553 mm (21.8 in)	
SSM-550-S	550 mm (21.7 in)	661 mm (26.0 in)	628 mm (24.7 in)	
SSM-675-S	675 mm (26.6 in)	786 mm (31.0 in)	753 mm (29.6 in)	
SSM-825-S	825 mm (32.5 in)	936 mm (36.9 in)	903 mm (35.6 in)	
SSM-875-S	875 mm (34.4 in)	986 mm (38.8 in)	953 mm (37.5 in)	
SSM-975-S	975 mm (38.4 in)	1086 mm (42.8 in)	1053 mm (41.5 in)	
SSM-1100-S	1100 mm (43.3 in)	1211 mm (47.7 in)	1178 mm (46.4 in)	
SSM-1175-S	1175 mm (46.3 in)	1286 mm (50.6 in)	1253 mm (49.3 in)	
SSM-1275-S	1275 mm (46.3 in)	1386 mm (54.6 in)	1353 mm (53.3 in)	
SSM-1400-S	1400 mm (55.1 in)	1511 mm (59.5 in)	1478 mm (58.2 in)	
SSM-1475-S	1475 mm (58.1 in)	1586 mm (62.5 in)	1553 mm (61.1 in)	
SSM-1550-S	1550 mm (61.0 in)	1661 mm (65.4 in)	1628 mm (64.1 in)	
SSM-1675-S	1675 mm (65.9 in)	1786 mm (70.3 in)	1753 mm (69.0 in)	
SSM-1750-S	1750 mm (68.9 in)	1861 mm (73.3 in)	1828 mm (72.0 in)	
SSM-1900-S	1900 mm (74.8 in)	2011 mm (79.2 in)	1978 mm (77.9 in)	

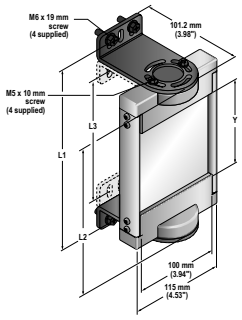

SSM Models	Light Curtain Series					
	SLS	S4B	LP	LS	Type 2	SGS
SSM-100						
SSM-200	150				150	
SSM-375	300	300	270	280	300	
SSM-475			410	350/420		
SSM-550	450	450		490	450	2–500
SSM-675	600	600	550	560/630	600	
SSM-825	750	750	690	700/770	750	
SSM-875			830	840		3–400
SSM-975	900	900		910	900	4–300
SSM-1100	1050	1050	970	980/1050	1050	
SSM-1175			1110	1120		
SSM-1275	1200	1200		1190	1200	4–400
SSM-1400	1350	1350	1250	1260/1330	1350	
SSM-1475			1390	1400		
SSM-1550	1500	1500		1470	1500	
SSM-1675			1530	1540/1610		
SSM-1750	1650	1650	1670	1680		
SSM-1900	1800	1800	1810	1750/1820		

11.16 MSA Series Stands

- Provides mounting T-slots with 20 mm dimension between slots
- Base included. Available without a base by adding the suffix **NB** to the model number (for example, **MSA-S42-1NB**)

[20] The mounting brackets may be inverted from the positions shown at left (flanges pointing “inward” instead of “outward,” as shown). When this is done, dimension L1 decreases by 58 mm (2.3 in).

© Banner Engineering Corp. All rights reserved.
www.bannerengineering.com

Stand Model	Pole Height	Useable Stand Height	Overall Stand Height	
MSA-S24-1	610 mm (24 in)	483 mm (19 in)	616 mm (24.25 in)	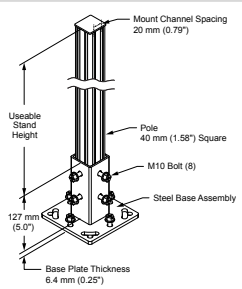
MSA-S42-1	1065 mm (42 in)	938 mm (37 in)	1071 mm (42.2 in)	
MSA-S66-1	1676 mm (66 in)	1549 mm (61 in)	1682 mm (66.25 in)	
MSA-S84-1	2134 mm (84 in)	2007 mm (79 in)	2140 mm (84.25 in)	
MSA-S105-1	2667 mm (105 in)	2540 mm (100 in)	2673 mm (105.25 in)	

11.17 Muting Accessories

The SGS Mute arms can be used with the EZ-SCREEN LS and a muting device (such as the Banner Safety Controllers).

A different T-nut is required to attach the arms to the EZ-SCREEN LS housing. See the EZ-SCREEN LS Muting Solution datasheet 206632 on www.bannerengineering.com for more information.

Model	Description
EZLSA-MCB-HW	SGS Mute Arm Kit to LS Mounting Adapter (mounts two mute arms)
SGSA-ML-R-LPQ20	L-Configuration Mute Arm Kit, right side (as viewed from the front of the receiver); one SGSA-Q20PLPQ5 mute sensor arm (two sensors) and one retroreflector arm (two reflectors)
SGSA-ML-L-LPQ20	L-Configuration Mute Arm Kit, left side (as viewed from the front of the receiver); one SGSA-Q20PLPQ5 mute sensor arm (two sensors) and one retroreflector arm (two reflectors)
SGSA-MT-LPQ20	T-Configuration Mute Arm Kit; includes four mute arms, four SGSA-Q20PLPQ5 mute sensors, and four retroreflectors
SGSA-MX-LPQ20	X-Configuration Mute Arm Kit; includes four mute arms, two SGSA-Q20PLPQ5 mute sensors, and two retroreflectors
SGSA-Q20PLPQ5	Q20 Retroreflective mute sensor with 600 mm (23.6 in) cordset and M12 quick disconnect
BRT-2X2	Retroreflective target for use with mute sensor
CSA4-M1251M1251M1251M1251	Splitter cable for connecting mute sensors to splitter (T-Muting, four sensors)
CSA-M1241M1241	Splitter cable for connecting mute sensors to splitter (L- and X-Muting, two sensors)
CSM4-M1281M1251M1281	Splitter cable for connecting emitter, receiver, and mute sensors to the 12-pin cable that goes to the muting device

© Banner Engineering Corp. All rights reserved.
www.bannerengineering.com

Chapter Contents

12.1 Replacement Parts 102
12.2 Clean Components with Mild Detergent 102
12.3 Warranty Service 102
12.4 Manufacturing Date 102
12.5 Disposal 103
12.6 Banner Engineering Corp Limited Warranty 103
12.7 Contact Us 103

Chapter 12 Product Support and Maintenance

12.1 Replacement Parts

Model	Description
STP-13	14 mm test piece (14 mm resolution systems)
STP-19	23 mm test piece (23 mm resolution systems)
STP-20	40 mm test piece (40 mm resolution systems)
EZLSA-RTP-1	Terminator plug, for SLLCR… receivers (included with receivers)
EZLSA-DP-1	Dust plug, for SLLCE… emitters (included with emitters)
DELSE-51D	Replacement for 300 mm pigtail, as shipped with standard 5-pin pigtail QD models; 5-conductor cable, 0.3 m (1 ft) long
DELSE-81D	Replacement for 300 mm pigtail, as shipped with standard 8-pin pigtail QD models; 8-conductor cable, 0.3 m (1 ft) long
EZLSA-MBK-11	End-cap bracket kit (includes 2 end brackets and hardware); 360° sensor rotation possible (± 23° increments); 8 ga (4.0 mm) steel, black zinc plated; Includes 2 brackets and hardware
EZLSA-MBK-12	Center-mount bracket kit (includes 1 bracket and hardware); +15°/ −30° sensor rotation; 8 ga (4.0 mm) steel, black zinc plated; die-cast zinc clamp. Includes 1 bracket and hardware
SMA-MBK-1	SSM mirror bracket kit. Includes 2 replacement brackets for one mirror
179480	EZ-SCREEN LS Instruction Manual

12.2 Clean Components with Mild Detergent

Components are best cleaned using mild detergent or window cleaner and a soft cloth. Avoid cleaners containing alcohol, as they may damage the acrylic lens covers.

12.3 Warranty Service

Contact Banner Engineering for troubleshooting of this device. **Do not attempt any repairs to this Banner device; it contains no field-replaceable parts or components.** If the device, device part, or device component is determined to be defective by a Banner Applications Engineer, they will advise you of Banner's RMA (Return Merchandise Authorization) procedure.

> **IMPORTANT:** If instructed to return the device, pack it with care. Damage that occurs in return shipping is not covered by warranty.

12.4 Manufacturing Date

Every EZ-SCREEN LS produced is marked with a code that defines the week and year of manufacture and manufacturing location. The code format (U.S. Standard format) is: **YYWWL**

- YY = Year of manufacture, 2 digits
- WW = Week of manufacture, 2 digits
- L = Banner-specific code, 1 digit

Example: 2309H = 2023, Week 9.

© Banner Engineering Corp. All rights reserved.
www.bannerengineering.com

12.5 Disposal

Devices that are no longer in use should be disposed of according to the applicable national and local regulations.

12.6 Banner Engineering Corp Limited Warranty

Banner Engineering Corp. warrants its products to be free from defects in material and workmanship for one year following the date of shipment. Banner Engineering Corp. will repair or replace, free of charge, any product of its manufacture which, at the time it is returned to the factory, is found to have been defective during the warranty period. This warranty does not cover damage or liability for misuse, abuse, or the improper application or installation of the Banner product.

THIS LIMITED WARRANTY IS EXCLUSIVE AND IN LIEU OF ALL OTHER WARRANTIES WHETHER EXPRESS OR IMPLIED (INCLUDING, WITHOUT LIMITATION, ANY WARRANTY OF MERCHANTABILITY OR FITNESS FOR A PARTICULAR PURPOSE), AND WHETHER ARISING UNDER COURSE OF PERFORMANCE, COURSE OF DEALING OR TRADE USAGE.

This Warranty is exclusive and limited to repair or, at the discretion of Banner Engineering Corp., replacement. **IN NO EVENT SHALL BANNER ENGINEERING CORP. BE LIABLE TO BUYER OR ANY OTHER PERSON OR ENTITY FOR ANY EXTRA COSTS, EXPENSES, LOSSES, LOSS OF PROFITS, OR ANY INCIDENTAL, CONSEQUENTIAL OR SPECIAL DAMAGES RESULTING FROM ANY PRODUCT DEFECT OR FROM THE USE OR INABILITY TO USE THE PRODUCT, WHETHER ARISING IN CONTRACT OR WARRANTY, STATUTE, TORT, STRICT LIABILITY, NEGLIGENCE, OR OTHERWISE.**

Banner Engineering Corp. reserves the right to change, modify or improve the design of the product without assuming any obligations or liabilities relating to any product previously manufactured by Banner Engineering Corp. Any misuse, abuse, or improper application or installation of this product or use of the product for personal protection applications when the product is identified as not intended for such purposes will void the product warranty. Any modifications to this product without prior express approval by Banner Engineering Corp will void the product warranties. All specifications published in this document are subject to change; Banner reserves the right to modify product specifications or update documentation at any time. Specifications and product information in English supersede that which is provided in any other language. For the most recent version of any documentation, refer to: www.bannerengineering.com.

For patent information, see www.bannerengineering.com/patents.

12.7 Contact Us

Banner Engineering Corp. headquarters is located at: 9714 Tenth Avenue North | Plymouth, MN 55441, USA | Phone: + 1 888 373 6767

For worldwide locations and local representatives, visit www.bannerengineering.com.

© Banner Engineering Corp. All rights reserved.
www.bannerengineering.com

Index

A

alignment, mechanical 41
accessories
  safety controller 93
  safety modules 92
  muting module 93

C

checkout
  initial 47
  periodic 67
  schedule of 69
control reliability 11
calculating safety distance 28
corner mirrors 35
crosstalk
  scan code 37

D

dual-channel control 55
distance
  minimum 28

E

emitter
  orientation 36

F

FSD 54
final switching devices 54

H

hazards
  reducing 31

I

installation
  mechanical 28

M

mechanical alignment 41
minimum distance 28
mirrors
  optical alignment 49
multiple systems 37
muting module
  accessories 93

O

optical alignment with mirrors 49
orientation 36

P

protective stop circuit 54

R

receiver
  orientation 36

S

safety stop circuit 54
single-channel control 55
safety distance 28
supplemental safeguarding 31
safety controller 93
safety modules
  accessories 92

© Banner Engineering Corp. All rights reserved.
www.bannerengineering.com

Glossary

ANSI

The American National Standards Institute (ANSI) is an association of industry representatives that develops technical standards (including safety standards). These standards comprise a consensus from a variety of industries on good practice and design. ANSI standards relevant to the application of safety products include the ANSI B11 Series, and ANSI/RIA R15.06.

automatic power-up

An automatic power-up is a light curtain system feature that, when switched on, enables the system to be powered up (and recover from a power interruption) without requiring a manual reset. When automatic power-up is on, the light curtain controller automatically begins internal diagnostics upon power-up and automatically resets the system if it passes the diagnostic check. When automatic power-up is off, a manual reset is required.

automatic reset

An automatic reset is the safety input device control operation setting where the assigned safety output automatically turns on when all of its associated input devices are in the Run state. No manual reset operation is required for the safety output to turn on when controlled only by safety input devices configured for automatic reset. When automatic reset is selected, the input device may be said to be configured to run in auto start/restart mode.

blocked condition

A block condition occurs when an opaque object of sufficient size blocks/interrupts one or more light curtain beams. When a blocked condition occurs, OSSD1 and OSSD2 outputs simultaneously turn off within the system response time.

brake

A brake is a mechanism for stopping, slowing, or preventing motion.

cascade

A cascade is a series connection (or daisy-chain) of multiple emitters and receivers.

clutch

A clutch is a mechanism that, when engaged, transmits torque to impart motion from a driving member to a driven member.

control reliability

Control reliability is a method of ensuring the performance integrity of a control system or device. Control circuits are designed and constructed so that a single failure or fault within the system does not prevent the normal stopping action from being applied to the machine when required, or does not create unintended machine action, but does prevent initiation of successive machine action until the failure is corrected.

defined area

The defined area is the "screen of light" generated by a safety light curtain system that is defined by the height and the safety distance (minimum distance) of the system.

Designated Person

A Designated Person is a person or persons identified and designated in writing, by the employer, as being appropriately trained and qualified to perform a specified checkout procedure.

dual-channel

A dual-channel device or configuration has redundant signal lines for each safety input or safety output.

© Banner Engineering Corp. All rights reserved.
www.bannerengineering.com

emitter (light curtain)

The light curtain's emitter is the light-emitting component of a safety light curtain system, consisting of a row of synchronized modulated LEDs. The emitter, together with the receiver (placed opposite), creates a "screen of light" called the defined area.

external device monitoring

External device monitoring (EDM) is a means by which a safety device (such as a safety light curtain) actively monitors the state (or status) of external devices that may be controlled by the safety device. A lockout of the safety device will result if an unsafe state is detected in the external device. External device(s) may include, but are not limited to: MPCEs, captive contact relays/contactors, and safety modules.

failure mode and effects analysis

Failure mode and effects analysis (FMEA) is a testing procedure by which potential failure modes in a system are analyzed to determine their results or effects on the system. Component failure modes that produce either no effect or a Lockout condition are permitted; failures that cause an unsafe condition (a failure to danger) are not. Banner safety products are extensively FMEA tested.

failure to danger

Failure to danger is a failure that delays or prevents a machine safety system from arresting dangerous machine motion, thereby increasing risk to personnel.

fault

A fault is a state of a device characterized by the inability to perform a required function, excluding the inability during preventive maintenance or other planned actions, or due to lack of external resources. A fault is often the result of a failure of the device itself, but may exist without prior failure.

final switching device

A final switching device (FSD) is the component of the machine’s safety-related control system that interrupts the circuit to the machine primary control element (MPCE) when the output signal switching device (OSSD) goes to the OFF-state.

fixed blanking

Fixed blanking is a programming feature that allows a safety light curtain system to ignore objects (such as brackets or fixtures) that will always be present at a specific location within the defined area. The presence of these objects will not cause the system’s safety outputs (for example, final switching devices) to trip or latch. If any fixed objects are moved within or removed from the defined area, a lockout condition results.

full-revolution devices

Full-revolution devices are a method of machine drive arranged such that, once started, the machine can be stopped only when the full cycle is complete. Examples include positive key clutches and similar mechanisms. Banner light curtain systems may not be used with full-revolution devices.

guarded machine

A guarded machine is the machine whose point of operation is guarded by the safety system.

hard (fixed) guard

Hard (fixed) guards are screens, bars, or other mechanical barriers affixed to the frame of the machine intended to prevent entry by personnel into the hazardous area(s) of a machine, while allowing the point of operation to be viewed. The maximum size of the openings is determined by the applicable standard, such as Table O-10 of OSHA 29CFR1910.217, also called a "fixed barrier guard."

harm

Harm is defined as physical injury or damage to the health of people, which may result through direct interaction with the machine or through indirect means, as a result of damage to property or to the environment.

© Banner Engineering Corp. All rights reserved.

hazard point

A hazard point is the closest reachable point of the hazardous area.

hazardous area

The hazardous area is an area that poses an immediate or impending physical hazard.

IEC

International Electrotechnical Commission

ISO

International Organization for Standardization

lockout condition

A lockout condition is a safety light curtain condition that is automatically attained in response to certain failure signals. When a lockout condition occurs, the safety light curtain's safety outputs turn off; the failure must be corrected and a manual reset is required to return the system to run mode.

machine primary control element

A machine primary control element (MPCE) is an electrically powered element, external to the safety system, that directly controls the machine's normal operating motion in such a way that the element is last (in time) to operate when the machine motion is either initiated or arrested.

machine response time

The machine response time is the time between the activation of a machine-stopping device and the instant when the dangerous parts of the machine reach a safe state by being brought to rest.

muting

Muting is the automatic suspension of the safeguarding function of a safety device during a non-hazardous portion of the machine cycle.

OSHA

The Occupational Safety and Health Administration (OSHA) is a U.S. Federal agency and division of the U.S. Department of Labor responsible for the regulation of workplace safety.

OFF state

The OFF state is the state in which the output circuit is interrupted and does not permit the flow of current.

ON state

The ON state is the state in which the output circuit is complete and permits the flow of current.

output signal switching device

The output signal switching devices (OSSD) are the safety outputs that are used to initiate a stop signal.

part-revolution clutch

A part-revolution clutch is a type of clutch that may be engaged or disengaged during the machine cycle. Part-revolution clutched machines use a clutch/brake mechanism, which can arrest machine motion at any point in the stroke or cycle.

pass-through hazard

A pass-through hazard is associated with applications where personnel may pass through a safeguard (which issues a stop command to remove the hazard), and then continues into the guarded area, such as in perimeter guarding. Subsequently, their presence is no longer detected, and the related danger becomes the unexpected start or restart of the machine while personnel are within the guarded area.

© Banner Engineering Corp. All rights reserved.

presence-sensing device initiation

Presence-sensing device initiation (PSDI) is an application in which a presence-sensing device is used to actually start the cycle of a machine. In a typical situation, an operator manually positions a part in the machine for the operation. When the operator moves out of the danger area, the presence-sensing device starts the machine (no start switch is used). The machine cycle runs to completion, and the operator can then insert a new part and start another cycle. The presence-sensing device continually guards the machine. Single-break mode is used when the part is automatically ejected after the machine operation. Double-break mode is used when the part is both inserted (to begin the operation) and removed (after the operation) by the operator. PSDI is commonly confused with "Trip Initiate." PSDI is defined in OSHA CFR1910.217. Banner safety light curtain systems may not be used as PSDI devices on mechanical power presses, per OSHA regulation 29 CFR 1910.217.

Qualified Person

A Qualified Person is a person who, by possession of a recognized degree or certificate of professional training, or who, by extensive knowledge, training and experience, has successfully demonstrated the ability to solve problems relating to the subject matter and work.

receiver (light curtains)

The receiver is the light-receiving component of a safety light curtain system and consists of a row of synchronized phototransistors. The receiver, together with the emitter (placed opposite), creates a "screen of light" called the defined area.

resolution

A safety light curtain's resolution is the minimum-diameter object that the safety light curtain system can reliably detect. Objects of this diameter or greater are detected anywhere in the defined area. A smaller object can pass undetected through the light if it passes exactly midway between two adjacent light beams.

safety distance

The safety distance is the minimum distance required to allow the machine’s hazardous motion to stop completely before a hand (or other object) can reach the nearest hazard point. The safety distance is measured from the midpoint of the defined area to the nearest hazard point. Factors that influence minimum separation distance include the machine stop time, the light curtain system response time, and the light curtain minimum object detection size.

self-checking

A self-checking circuit has the capability to electronically verify that all of its own critical circuit components, along with their redundant backups, are operating properly. Banner Engineering safety light curtain systems and safety modules are self-checking.

single-channel

Single-channel refers to having only one signal line for a safety input or safety output.

stop signal

The stop signal is the input signal monitored by the controller that, when detected, causes one or more safety outputs to turn off. In this manual, either the input device or device signal is said to be in the stop state.

supplemental guarding

Supplemental guarding is additional safeguarding device(s) or hard guarding, used to prevent a person from reaching over, under, through or around the primary safeguard or otherwise accessing the guarded hazard.

test piece

A test piece is an opaque object of sufficient size used to block a light beam to test the operation of a safety light curtain system. When inserted into the defined area and placed in front of a beam, the test piece causes the outputs to de-energize.

© Banner Engineering Corp. All rights reserved.

LinkedIn

X (formerly Twitter)

Facebook



© 2025. All rights reserved.
www.bannerengineering.com