MODEL NO.	"MTL"	"THD"	"L"	P/N
PBT29.83U	NPB	M3 X 0.5	3000 [118]	800989
PBT250U	NPB	M3 X 0.5	15240 [600]	51796
PBT29UMSS	SS	M3 X 0.5	3000 [118]	48097
PBT2.25U	NPB	M3 X 0.5	76 [3]	48019
PBT26UMT8-32	SS	#8-32	2000 [79]	48048
PBT26UMT10-32	SS	#10-32	2000 [79]	48049
PBT26UMSS	SS	M3 X 0.5	2000 [79]	48043
PBT230U	SS	M3 X 0.5	9144 [360]	45048
PBT26UMI	SS	M3 X 0.5	2000 [79]	51844
PBT215U	NPB	M3 X 0.5	5000 [197]	28922
PBT26U	NPB	M3 X 0.5	2000 [79]	26080

NOTE:

1. NPB = NICKEL PLATED BRASS
   SS = STAINLESS STEEL

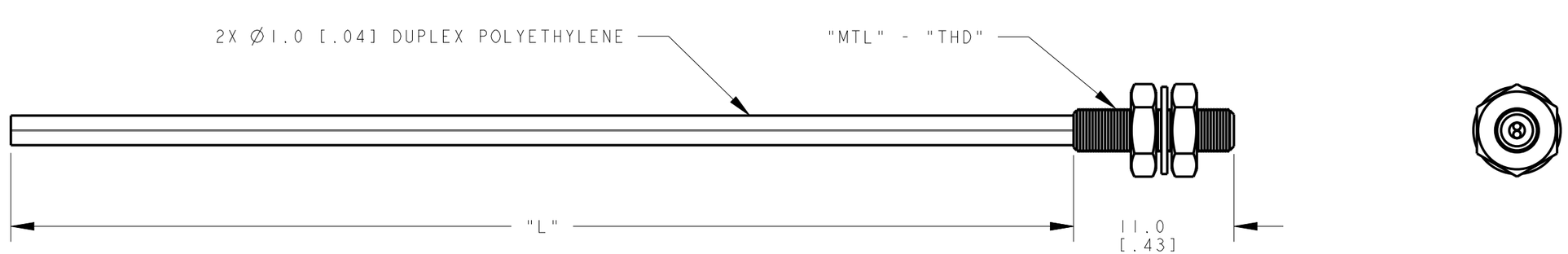

NOTES:
1. ALL DIMENSIONS ARE MILLIMETERS [INCHES] UNLESS OTHERWISE NOTED.
2. REFER TO "www.bannerengineering.com" FOR ADDITIONAL DATA AND SPECIFICATIONS.

This drawing is the property of BANNER ENGINEERING CORP. Any use or reproduction, in any form, without prior written permission of Banner is prohibited.
© Banner Engineering Corp.

THIRD ANGLE PROJECTION

BANNER ENGINEERING CORP.
www.bannerengineering.com

TITLE

PBT2 SERIES UNTERMINATED

SIZE	DRAWING NO.	REV.
B	161900	A

SCALE 3:1 | SHEET 1 OF 1

CREO

ПРОМЭЛЕКТРОНИКА/ sales@prom-elec.com