MODEL NO.	"L"	P/N
PDI42.5SM2XTS-I	762 [30]	56060
PDI43.33SM2XTS-I	1000 [39]	83379

*'TS' SUFFIX DESIGNATES FIBER TO BE USED WITH DI2 FP SERIES SENSORS.

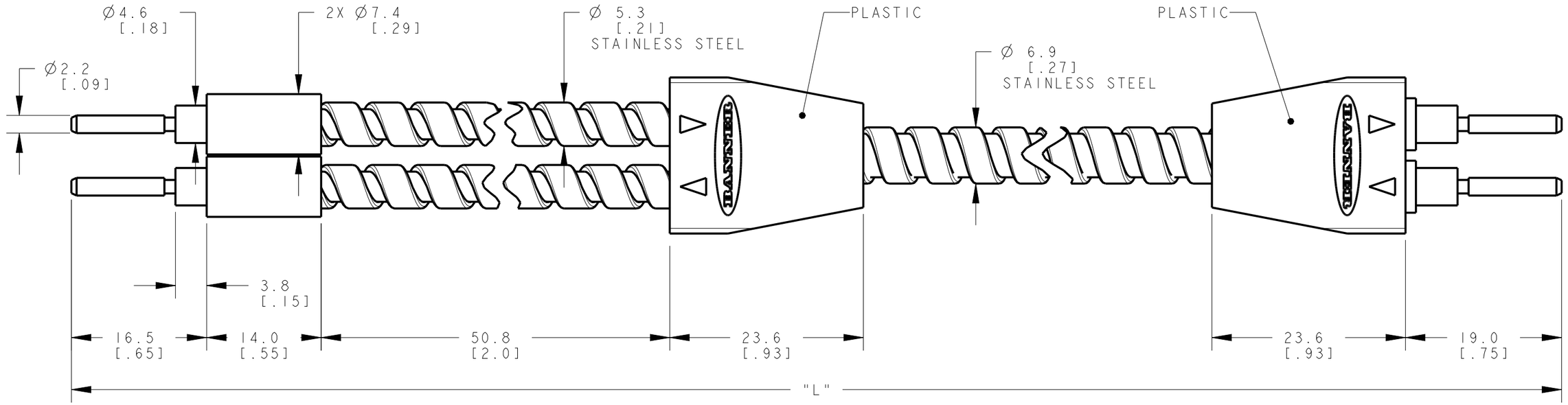

NOTES:
1. ALL DIMENSIONS ARE MILLIMETERS [INCHES] UNLESS OTHERWISE NOTED.
2. REFER TO "www.bannerengineering.com" FOR ADDITIONAL DATA AND SPECIFICATIONS.

This drawing is the property of BANNER ENGINEERING CORP. Any use or reproduction, in any form, without prior written permission of Banner is prohibited.
© 2015 Banner Engineering Corp.

THIRD ANGLE PROJECTION

BANNER ENGINEERING CORP.
www.bannerengineering.com

TITLE
PDI4 TS SERIES

SIZE	DRAWING NO.	REV.
B	193355	A

SCALE 2:1 | SHEET 1 OF 1

CREO

ПРОМЭЛЕКТРОНИКА/ sales@prom-elec.com