MODEL NO.	"L"	P/N
PD1415U-LLD	4572 [180]	65936
PD146U-LLD	2000 [79]	61240

NOTE: THIS LIQUID LEVEL DETECTION (LLD) FIBER OPTIC ASSEMBLY CAN BE USED WITH THE FOLLOWING SIZE TRANSPARENT TUBES: Ø2mm TO Ø25mm (WHEN USED WITH D10E/D12E/D11E SERIES AMPLIFIER)

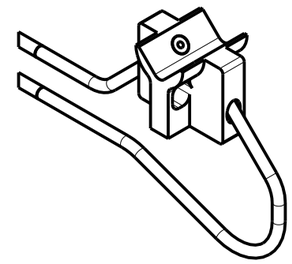

ISOMETRIC VIEW
SCALE 1:1

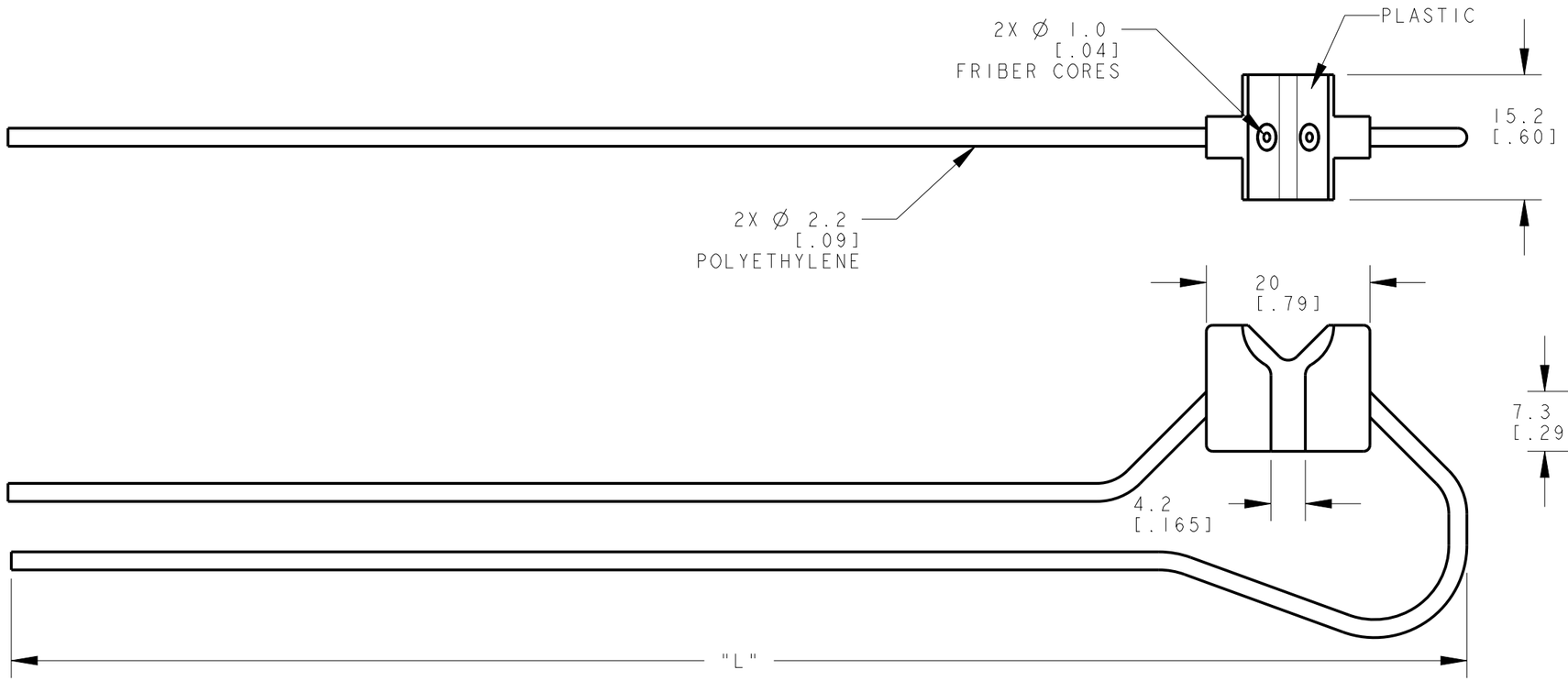

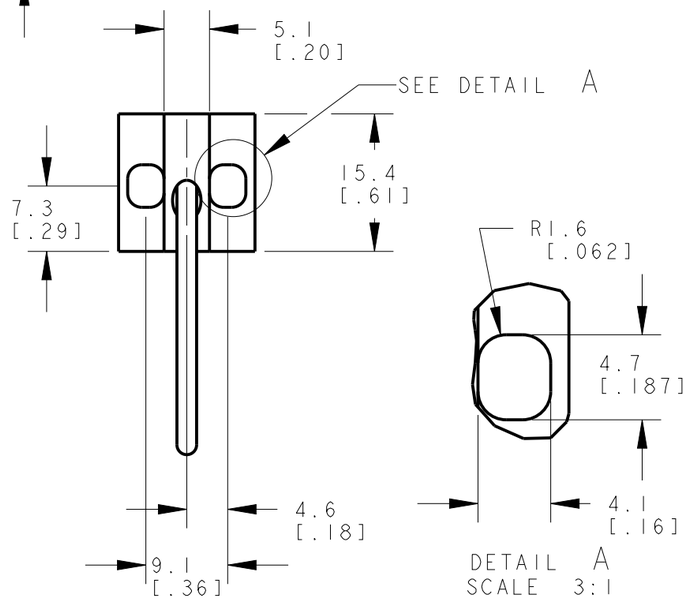

DETAIL A
SCALE 3:1

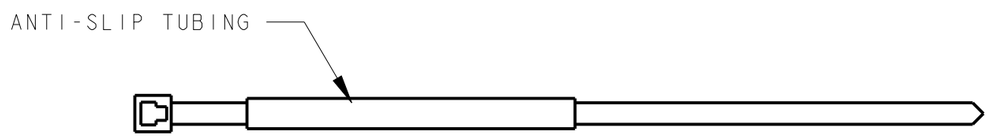

(2X NYLON MOUNTING STRAPS SUPPLIED)

NOTES:
1. ALL DIMENSIONS ARE MILLIMETERS [INCHES] UNLESS OTHERWISE NOTED.
2. REFER TO "www.bannerengineering.com" FOR ADDITIONAL DATA AND SPECIFICATIONS.

This drawing is the property of BANNER ENGINEERING CORP. Any use or reproduction, in any form, without prior written permission of Banner is prohibited.
© 2015 Banner Engineering Corp.

THIRD ANGLE PROJECTION

BANNER ENGINEERING CORP.
www.bannerengineering.com

TITLE

PD14 SERIES LIQUID LEVEL DETECTION UNTERMINATED

SIZE	DRAWING NO.	REV.
B	166410	A
SCALE 3:2	SHEET 1 OF 1	

CREO

ПРОМЭЛЕКТРОНИКА/ sales@prom-elec.com