SL10 Series Slot Sensor

Datasheet

Self-Contained Opposed-Mode Sensor Pair

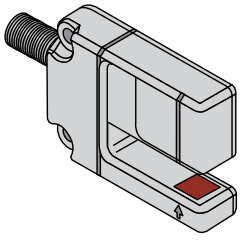

- An easy-to-use self-contained opposed-mode sensor pair in a rugged U-shaped housing
- Easy and economical to mount
- Molded-in beam guides simplify mounting and beam placement
- 10 mm slot width for a wide variety of sensing applications
- Applications include label detection, hole detection, gear tooth detection, edge guiding, parts detection and counting
- 2 mm effective beam
- 10 to 30V dc operation
- Bipolar PNP/NPN outputs
- Visible red beam
- Choose 1 millisecond or 300 microsecond response
- 4-turn potentiometer sensitivity adjustment
- Dark or light operate
- Choose integral, unterminated cable or QD models

WARNING: Not To Be Used for Personnel Protection

Never use this device as a sensing device for personnel protection. Doing so could lead to serious injury or death. This device does not include the self-checking redundant circuitry necessary to allow its use in personnel safety applications. A sensor failure or malfunction can cause either an energized or de-energized sensor output condition.

Models

Models	Sensing Beam	Slot Width	Cable[1]	Supply Voltage	Output Type	Response	Repeatability
SL10VB6V	Visible red, 680 nm	10 mm (0.4 in)	2 m (6.5ft) 5-wire cable	10 V dc to 30 V dc	Bipolar NPN and PNP	1 ms	250 µs
SL10VB6VQ			5-Pin Euro-style QD				
SL10VB6VY			2 m (6.5ft) 5-wire cable			300 µs	75 µs
SL10VB6VYQ			5-Pin Euro-style QD				

Overview

The SL10 Series Slot Sensor (sometimes called a “Fork Sensor”) comprises an opposed-mode emitter and its receiver inside a single convenient housing.

Opposed-mode sensing is very reliable, and the single self-contained housing provides easy installation, with no sensor alignment required. In addition, the molded-in arrow on the emitter portion of the housing and the slotted design on the receiver portion of the housing show at a glance the position of the beam, simplifying installation placement.

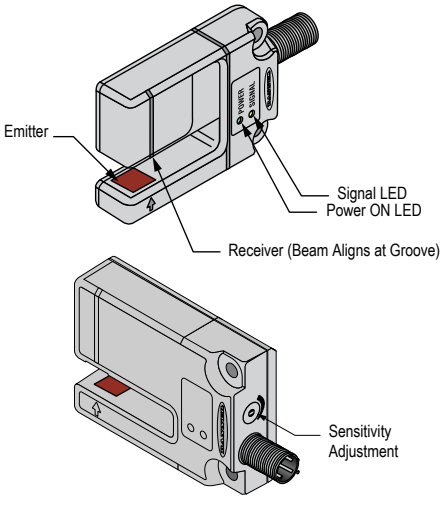

Figure 1. Features

[1] To order the 9 m (30 ft) PVC cable model, add the suffix "W/30" to the cabled model number. For example, Models with a quick disconnect require a mating cordset.

Original Document
58341 Rev. D

23 February 2018

58341

ПРОМЭЛЕКТРОНИКА/ sales@prom-elec.com

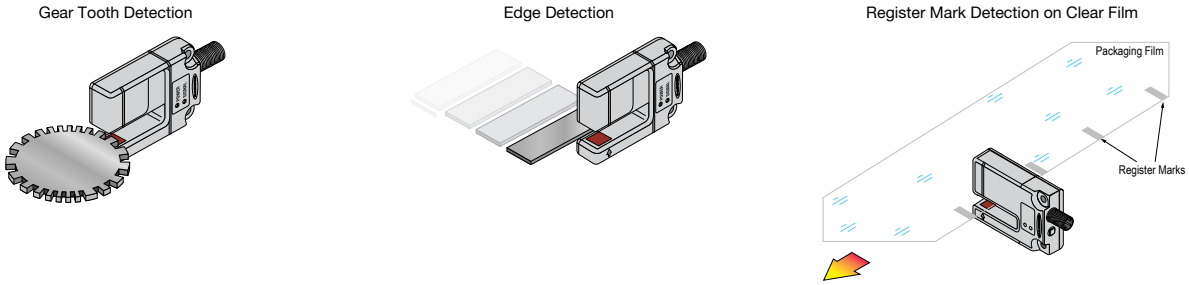

Figure 2. Typical Applications

LED Indicators

The Slot Sensor features two LED Indicators: Power (green) and Signal (amber). They indicate the following:

Green ON: Power ON
Amber ON: Sensor sees light
Amber flashing: Excess gain is marginal (1 to 1.5×) in light condition

Select Light Operate/Dark Operate

Connect the gray wire to +V (10 V dc to 30 V dc) for Dark Operate; and to dc common (or open) for Light Operate. See wiring diagrams.

Wiring Diagrams

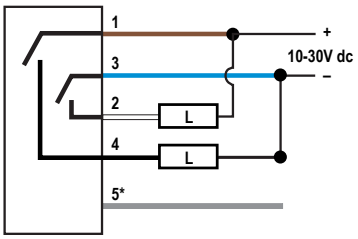

Wiring Key

1. Brown
2. White
3. Blue
4. Black
5. Gray*

*For Dark operate, connect gray wire to + (brown). For Light operate, connect gray wire to - (blue).

Note: Quick disconnect (QD) wiring diagrams are functionally identical.

Adjust the Sensitivity

Adjust the sensitivity by turning the 4-turn clutched Sensitivity potentiometer with a small slotted screwdriver.

1. Apply power to the sensor.
2. Turn the potentiometer fully counter-clockwise, 4 full turns or more to set the sensor to the minimum sensitivity.
3. Present the Light condition.
   If the amber Signal Condition indicator is ON, that is the Light condition sensitivity position. If not, proceed to the next step.
4. Turn the potentiometer clockwise, just until the amber Signal Condition indicator turns ON and note the position of the potentiometer.
5. Present the Dark condition.
6. Turn the potentiometer clockwise, just until the amber Signal Condition indicator turns ON, and note the position of the potentiometer.
7. For maximum reliability, the difference between these two positions should be at least one full turn. Set the sensitivity midway between the two positions for best sensing results.

If the object to be sensed is very thin and non-metallic, the sensor may emit too much light energy for the object to completely block the beam. To test this, place the object in the sensing position, and decrease the sensitivity until the amber LED goes OFF. Remove the object; verify that the indicator comes ON solidly. If this does not occur, investigate other sensing alternatives.

Specifications

Supply Voltage and Current
10 to 30V dc (10% max. ripple), 30 mA

Supply Protection Circuitry
Protected against reverse polarity and transient voltages

Output Configuration
Bipolar: NPN and PNP

Output Rating
150 mA, each output

Output Protection Circuitry
Protected against output short-circuit and false pulse on power up

Output Response Time
1 millisecond or 300 microseconds, depending on model

Repeatability
250 microseconds or 75 microseconds, depending on model

Adjustments
4-turn clutched potentiometer sensitivity adjustment

Slot Opening
10 mm (0.4 in) wide x 45 mm (1.8 in) deep overall; beam set in 10 mm (0.4 in) from outer edge

Indicators
Green: Power on/off indicator
Amber: Signal condition indicator

Construction
Housing: ABS/polycarbonate blend
Optic windows: acrylic

Connections
2 m (6.5 ft) or 9 m (30 ft) 5-conductor PVC-jacketed attached cable or 5-pin Euro-style quick-disconnect (QD) connector

Environmental Rating
IEC IP67; NEMA 6

Operating Conditions
–40 °C to +70 °C (–40 °F to +158 °F)
90% at +50 °C maximum relative humidity (non-condensing)

Required Overcurrent Protection

WARNING: Electrical connections must be made by qualified personnel in accordance with local and national electrical codes and regulations.

Overcurrent protection is required to be provided by end product application per the supplied table.
Overcurrent protection may be provided with external fusing or via Current Limiting, Class 2 Power Supply.
Supply wiring leads < 24 AWG shall not be spliced.
For additional product support, go to *www.bannerengineering.com*.

Supply Wiring (AWG)	Required Overcurrent Protection (Amps)
20	5.0
22	3.0
24	2.0
26	1.0
28	0.8
30	0.5

Certifications

IND. CONT. EQ. E224071

Dimensions

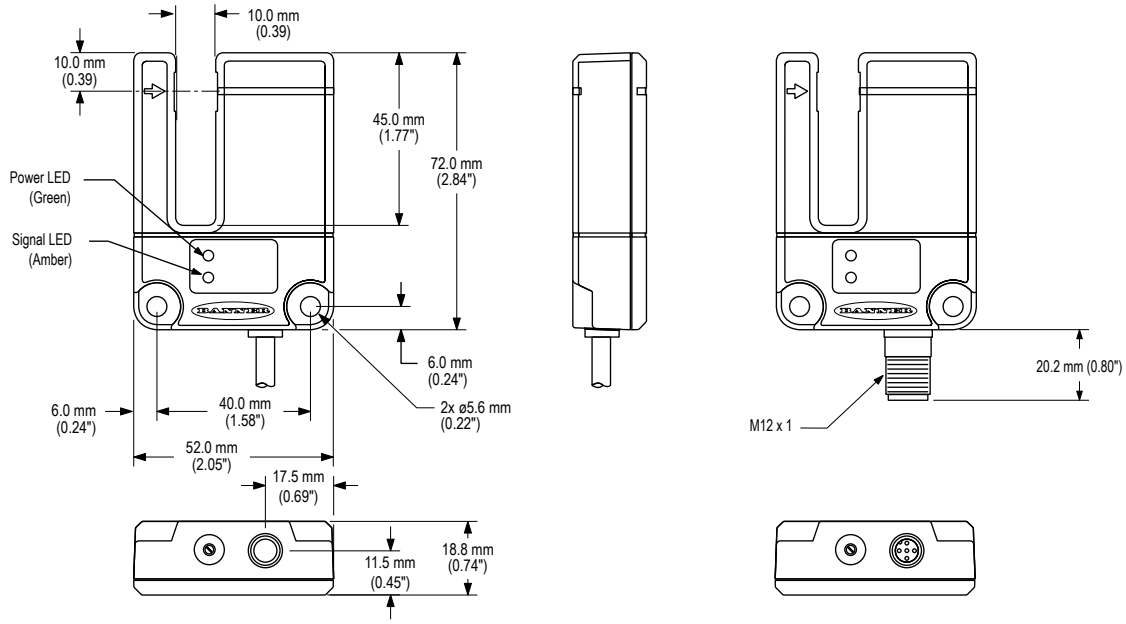

All measurements are listed in millimeters [inches], unless noted otherwise.

Accessories

Cordsets

5-Pin Threaded M12/Euro-Style Cordsets—Single Ended				
Model	**Length**	**Style**	**Dimensions**	**Pinout (Female)**
MQDC1-501.5	0.50 m (1.5 ft)	Straight	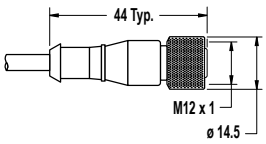	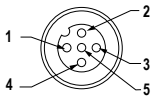 1 = Brown 2 = White 3 = Blue 4 = Black 5 = Gray
MQDC1-506	1.83 m (6 ft)			
MQDC1-515	4.57 m (15 ft)			
MQDC1-530	9.14 m (30 ft)			
MQDC1-506RA	1.83 m (6 ft)	Right-Angle	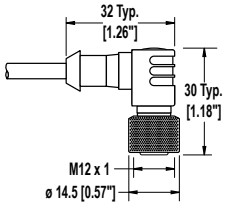	
MQDC1-515RA	4.57 m (15 ft)			
MQDC1-530RA	9.14 m (30 ft)			

Brackets

SMBSL

- Angled bracket
- 304 stainless steel
- Hardware included

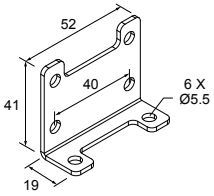

Banner Engineering Corp. Limited Warranty

Banner Engineering Corp. warrants its products to be free from defects in material and workmanship for one year following the date of shipment. Banner Engineering Corp. will repair or replace, free of charge, any product of its manufacture which, at the time it is returned to the factory, is found to have been defective during the warranty period. This warranty does not cover damage or liability for misuse, abuse, or the improper application or installation of the Banner product.

THIS LIMITED WARRANTY IS EXCLUSIVE AND IN LIEU OF ALL OTHER WARRANTIES WHETHER EXPRESS OR IMPLIED (INCLUDING, WITHOUT LIMITATION, ANY WARRANTY OF MERCHANTABILITY OR FITNESS FOR A PARTICULAR PURPOSE), AND WHETHER ARISING UNDER COURSE OF PERFORMANCE, COURSE OF DEALING OR TRADE USAGE.

This Warranty is exclusive and limited to repair or, at the discretion of Banner Engineering Corp., replacement. **IN NO EVENT SHALL BANNER ENGINEERING CORP. BE LIABLE TO BUYER OR ANY OTHER PERSON OR ENTITY FOR ANY EXTRA COSTS, EXPENSES, LOSSES, LOSS OF PROFITS, OR ANY INCIDENTAL, CONSEQUENTIAL OR SPECIAL DAMAGES RESULTING FROM ANY PRODUCT DEFECT OR FROM THE USE OR INABILITY TO USE THE PRODUCT, WHETHER ARISING IN CONTRACT OR WARRANTY, STATUTE, TORT, STRICT LIABILITY, NEGLIGENCE, OR OTHERWISE.**

Banner Engineering Corp. reserves the right to change, modify or improve the design of the product without assuming any obligations or liabilities relating to any product previously manufactured by Banner Engineering Corp. Any misuse, abuse, or improper application or installation of this product or use of the product for personal protection applications when the product is identified as not intended for such purposes will void the product warranty. Any modifications to this product without prior express approval by Banner Engineering Corp will void the product warranties. All specifications published in this document are subject to change; Banner reserves the right to modify product specifications or update documentation at any time. Specifications and product information in English supersede that which is provided in any other language. For the most recent version of any documentation, refer to: *www.bannerengineering.com*.

© Banner Engineering Corp. All rights reserved