SGSA-MCB Series **Connection** Box

Datasheet

Use the SGSA-MCB Muting Connection Box as a muting accessory for the Banner SGS Safety Grid System with Integral Muting.

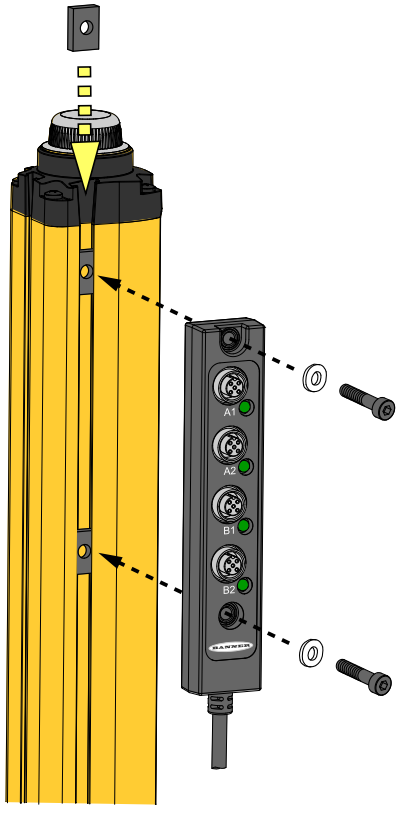

Banner SGS muting sensors can be connected directly to the muting connection box.

The muting connection box connects to the dedicated 5-pin M12 muting connector on the SGS Receiver of an Emitter/Receiver system or Active side of an Active/Passive system.

Aside from the green LEDs that indicate sensors output status, the SGSA-MCB does not contain any electronic elements and is therefore not subject to any safety classification.

- Supply and switching voltage +24 V DC
- M12 connection
- Simple connection to safety light curtains.

For correct LED operation, you must use identical sensors for the four M12 sockets.

Models

Model	**Description**
SGSA-MCB	Connection Box
SGSA-MCB-HW	Optional hardware kit for mounting Connection Box to the t-slot of SGS Receiver or Active unit.

Specifications

Supply Voltage
+24 V dc ± 20%

Maximum Current Load
1 A

Construction
Black PVC (UL Recognized) housing and cable (C1); 5-pin M12 A-Coding female cable connector (C2); 5-pin M12-5P A-Coding female socket housing connector

Insulating Resistance
>10^9 Ω

Environmental **Rating**
IEC IP65; To maintain the IEC IP65 rating, use the included dust cap on all unused connectors.

Operating Temperature
–10 °C to +55 °C (+14 °F to +131 °F)

Storage Temperature
–25 °C to +70 °C (–13 °F to +158 °F)

Certifications

Original Document
203060 Rev. A

20 September 2017

203060

ПРОМЭЛЕКТРОНИКА/ sales@prom-elec.com

Dimensions

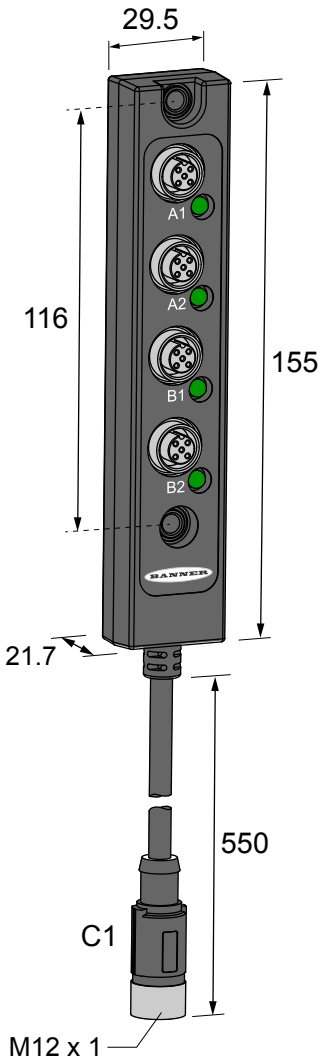

Pin Assignment					
Pin	C1	A1	A2	B1	B2
1	24 V	24 V	24 V	24 V	24 V
2	MUT2	-	-	-	-
3	0 V	0 V	0 V	0 V	0 V
4	MUT 1	MUT 1	MUT 1	MUT 2	MUT 2
5	-	-	-	-	-

Banner Engineering Corp. Limited Warranty

Banner Engineering Corp. warrants its products to be free from defects in material and workmanship for one year following the date of shipment. Banner Engineering Corp. will repair or replace, free of charge, any product of its manufacture which, at the time it is returned to the factory, is found to have been defective during the warranty period. This warranty does not cover damage or liability for misuse, abuse, or the improper application or installation of the Banner product.

THIS LIMITED WARRANTY IS EXCLUSIVE AND IN LIEU OF ALL OTHER WARRANTIES WHETHER EXPRESS OR IMPLIED (INCLUDING, WITHOUT LIMITATION, ANY WARRANTY OF MERCHANTABILITY OR FITNESS FOR A PARTICULAR PURPOSE), AND WHETHER ARISING UNDER COURSE OF PERFORMANCE, COURSE OF DEALING OR TRADE USAGE.

This Warranty is exclusive and limited to repair or, at the discretion of Banner Engineering Corp., replacement. IN NO EVENT SHALL BANNER ENGINEERING CORP. BE LIABLE TO BUYER OR ANY OTHER PERSON OR ENTITY FOR ANY EXTRA COSTS, EXPENSES, LOSSES, LOSS OF PROFITS, OR ANY INCIDENTAL, CONSEQUENTIAL OR SPECIAL DAMAGES RESULTING FROM ANY PRODUCT DEFECT OR FROM THE USE OR INABILITY TO USE THE PRODUCT, WHETHER ARISING IN CONTRACT OR WARRANTY, STATUTE, TORT, STRICT LIABILITY, NEGLIGENCE, OR OTHERWISE.

Banner Engineering Corp. reserves the right to change, modify or improve the design of the product without assuming any obligations or liabilities relating to any product previously manufactured by Banner Engineering Corp. Any misuse, abuse, or improper application or installation of this product or use of the product for personal protection applications when the product is identified as not intended for such purposes will void the product warranty. Any modifications to this product without prior express approval by Banner Engineering Corp will void the product warranties. All specifications published in this document are subject to change; Banner reserves the right to modify product specifications or update documentation at any time. Specifications and product information in English supersede that which is provided in any other language. For the most recent version of any documentation, refer to: www.bannerengineering.com.

© Banner Engineering Corp. All rights reserved