R95 M12 Power Splitter - L-Code Pass-Through with A-Code Power Drops

Features



- Step down high-amperage L-Code (16A) into lower-amperage A-Code (4A)
- Run lower-amperage device off of high-amperage L-code via an A-Code split-off
- Only need one high-amperage power supply

Models

Model	Housing	Power Connections	Power Drops	Wiring
R95-M12LM5-M12LF5-4M12F5-P13	6-Port Molded Junction Box	1 x L-Code male M12 1 x L-Code female M12	4 x A-Code female M12	V+, V- power distribution (see Wiring)

Wiring

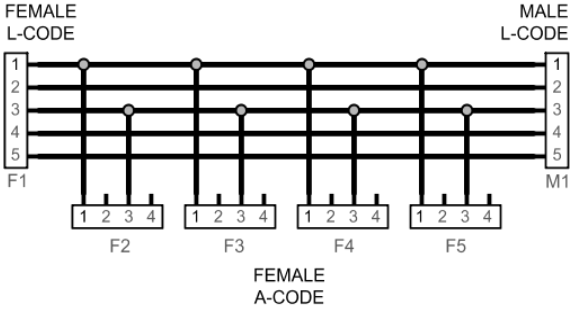

Specifications

Voltage Rating
63 V DC

A-Code Amperage
4 A per port

L-Code Amperage
16 A

Construction
Coupling Material: Nickel-plated brass
Housing Body: TPU black

Environmental Ratings
IP65, IP67, IP68

Operating Conditions
–40 °C to +70 °C (–40 °F to +158 °F)
90% at +70 °C maximum relative humidity (non-condensing)
Storage Temperature: –40 °C to +80 °C (–40 °F to +176 °F)

Certifications

Banner Engineering BV
Park Lane, Culliganlaan 2F bus 3
1831 Diegem, BELGIUM

Original Instructions
30-Apr-26

© Banner Engineering Corp. All rights reserved.
www.bannerengineering.com

253886
p/n: 253886 Rev. A

ПРОМЭЛЕКТРОНИКА/ sales@prom-elec.com

Dimensions

All measurements are listed in millimeters [inches], unless noted otherwise. The measurements provided are subject to change.

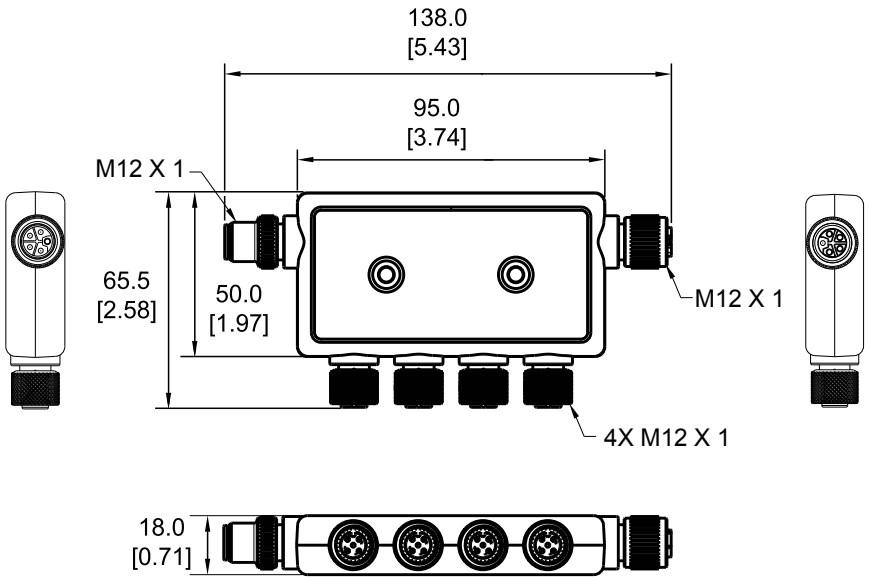

Accessories

Cordsets

4-pin Single-Ended M12 Female Cordsets (datasheet p/n 235937)				
Model	**Length**	**Dimensions (mm)**	**Pinout (Female)**	
BC-M12F4-22-1	1 m (3.28 ft)	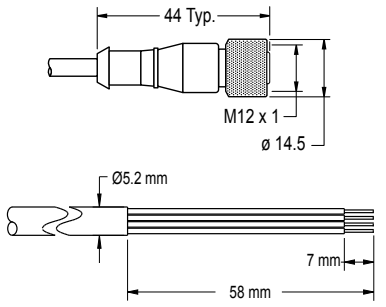	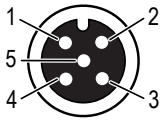	1 = Brown 2 = White 3 = Blue 4 = Black 5 = Unused
BC-M12F4-22-2	2 m (6.56 ft)			
BC-M12F4-22-5	5 m (16.4 ft)			
BC-M12F4-22-8	8 m (26.25 ft)			
BC-M12F4-22-10	10 m (30.81 ft)			
BC-M12F4-22-15	15 m (49.2 ft)			
BC-M12F4-22-20	20 m (65.61 ft)			
BC-M12F4-22-25	25 m (82.02 ft)			
BC-M12F4-22-30	30 m (98.42 ft)			

4-pin A-Code Double-Ended M12 Female to M12 Male Cordsets (datasheet p/n 236186)				
Model	**Length**	**Dimensions (mm)**	**Pinouts**	
BC-M12F4-M12M4-22-1	1 m (3.28 ft)	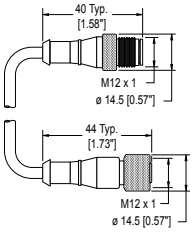	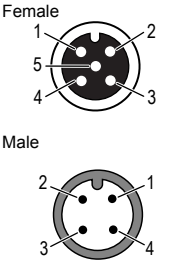	1 = Brown 2 = White 3 = Blue 4 = Black 5 = Unused
BC-M12F4-M12M4-22-2	2 m (6.56 ft)			
BC-M12F4-M12M4-22-3	3 m (9.84 ft)			
BC-M12F4-M12M4-22-4	4 m (13.12 ft)			
BC-M12F4-M12M4-22-5	5 m (16.4 ft)			
BC-M12F4-M12M4-22-10	10 m (30.81 ft)			
BC-M12F4-M12M4-22-15	15 m (49.2 ft)			

© Banner Engineering Corp. All rights reserved.
www.bannerengineering.com

5-pin L-Code Single-Ended M12 Female Cordsets				
Model	**Length**	**Dimensions (mm)**	**Pinout (Female)**	
BCP-M12LF5-14-1	1 m (3.28 ft)	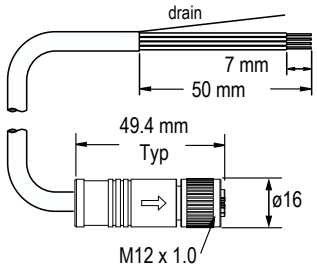	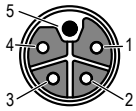	1 = Brown 2 = White 3 = Blue 4 = Black 5 = Yellow/Green Shell = Braid
BCP-M12LF5-14-2	2 m (6.56 ft)			
BCP-M12LF5-14-5	5 m (16.4 ft)			
BCP-M12LF5-14-10	10 m (32.8 ft)			
BCP-M12LF5-14-15	15 m (49.2 ft)			
BCP-M12LF5-14-20	20 m (65.6 ft)			

5-pin L-Code Single-Ended M12 Male Cordsets				
Model	**Length**	**Dimensions (mm)**	**Pinout (Male)**	
BCP-M12LM5-14-1	1 m (3.28 ft)	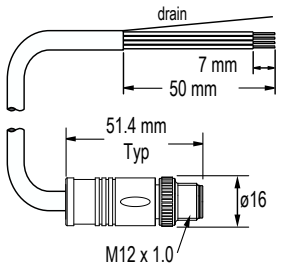	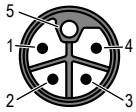	1 = Brown 2 = White 3 = Blue 4 = Black 5 = Yellow/Green Shell = Braid
BCP-M12LM5-14-2	2 m (6.56 ft)			
BCP-M12LM5-14-5	5 m (16.4 ft)			
BCP-M12LM5-14-10	10 m (32.8 ft)			
BCP-M12LM5-14-15	15 m (49.2 ft)			
BCP-M12LM5-14-20	20 m (65.6 ft)			

5-pin L-Code Double-Ended M12 Female to M12 Male Cordsets				
Model	**Length**	**Dimensions (mm)**	**Pinout (Female)**	**Pinout (Male)**
BCP-M12LF5-M12LM5-14-1	1 m (3.28 ft)	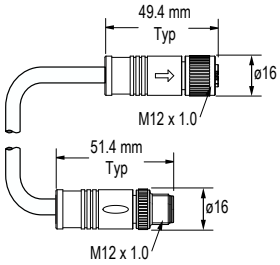	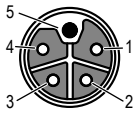	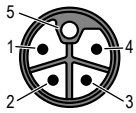
BCP-M12LF5-M12LM5-14-2	2 m (6.56 ft)			
BCP-M12LF5-M12LM5-14-5	5 m (16.4 ft)			
BCP-M12LF5-M12LM5-14-10	10 m (32.8 ft)			
BCP-M12LF5-M12LM5-14-15	15 m (49.2 ft)			
BCP-M12LF5-M12LM5-14-20	20 m (65.6 ft)		1 = Brown 2 = White 3 = Blue 4 = Black 5 = Yellow/Green Shell = Braid	1 = Brown 2 = White 3 = Blue 4 = Black 5 = Yellow/Green Shell = Braid

Product Support and Maintenance

Clean with Mild Detergent and Warm Water

Wipe down the device with a soft cloth dampened with a mild detergent and warm water solution. Do not use any other chemicals for cleaning.

Repairs

Contact Banner Engineering for troubleshooting of this device. **Do not attempt any repairs to this Banner device; it contains no field-replaceable parts or components.** If the device, device part, or device component is determined to be defective by a Banner Applications Engineer, they will advise you of Banner's RMA (Return Merchandise Authorization) procedure.

> **IMPORTANT:** If instructed to return the device, pack it with care. Damage that occurs in return shipping is not covered by warranty.

Contact Us

Banner Engineering Corp. | 9714 Tenth Avenue North | Plymouth, MN 55441, USA | Phone: + 1 888 373 6767

For worldwide locations and local representatives, visit www.bannerengineering.com.

© Banner Engineering Corp. All rights reserved.
www.bannerengineering.com

Banner Engineering Corp Limited Warranty

Banner Engineering Corp. warrants its products to be free from defects in material and workmanship for one year following the date of shipment. Banner Engineering Corp. will repair or replace, free of charge, any product of its manufacture which, at the time it is returned to the factory, is found to have been defective during the warranty period. This warranty does not cover damage or liability for misuse, abuse, or the improper application or installation of the Banner product.

THIS LIMITED WARRANTY IS EXCLUSIVE AND IN LIEU OF ALL OTHER WARRANTIES WHETHER EXPRESS OR IMPLIED (INCLUDING, WITHOUT LIMITATION, ANY WARRANTY OF MERCHANTABILITY OR FITNESS FOR A PARTICULAR PURPOSE), AND WHETHER ARISING UNDER COURSE OF PERFORMANCE, COURSE OF DEALING OR TRADE USAGE.

This Warranty is exclusive and limited to repair or, at the discretion of Banner Engineering Corp., replacement. **IN NO EVENT SHALL BANNER ENGINEERING CORP. BE LIABLE TO BUYER OR ANY OTHER PERSON OR ENTITY FOR ANY EXTRA COSTS, EXPENSES, LOSSES, LOSS OF PROFITS, OR ANY INCIDENTAL, CONSEQUENTIAL OR SPECIAL DAMAGES RESULTING FROM ANY PRODUCT DEFECT OR FROM THE USE OR INABILITY TO USE THE PRODUCT, WHETHER ARISING IN CONTRACT OR WARRANTY, STATUTE, TORT, STRICT LIABILITY, NEGLIGENCE, OR OTHERWISE.**

Banner Engineering Corp. reserves the right to change, modify or improve the design of the product without assuming any obligations or liabilities relating to any product previously manufactured by Banner Engineering Corp. Any misuse, abuse, or improper application or installation of this product or use of the product for personal protection applications when the product is identified as not intended for such purposes will void the product warranty. Any modifications to this product without prior express approval by Banner Engineering Corp will void the product warranties. All specifications published in this document are subject to change; Banner reserves the right to modify product specifications or update documentation at any time. Specifications and product information in English supersede that which is provided in any other language. For the most recent version of any documentation, refer to: www.bannerengineering.com.

For patent information, see www.bannerengineering.com/patents.

© Banner Engineering Corp. All rights reserved.