NOTE: Thread bosses use #10 x 3/8 Trilobular thread forming screw

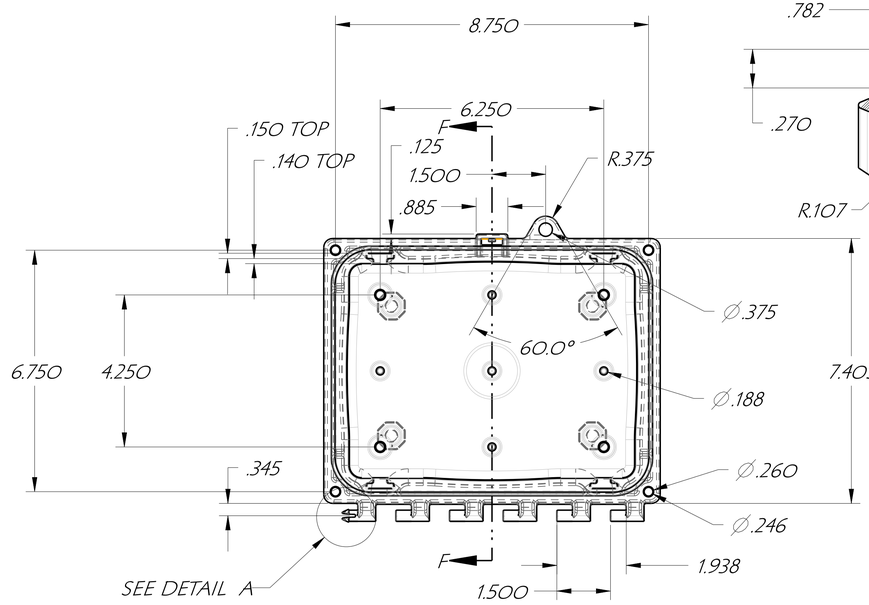


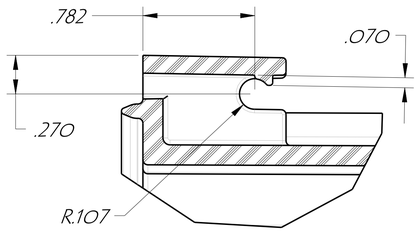


DETAIL C
SCALE 2.000

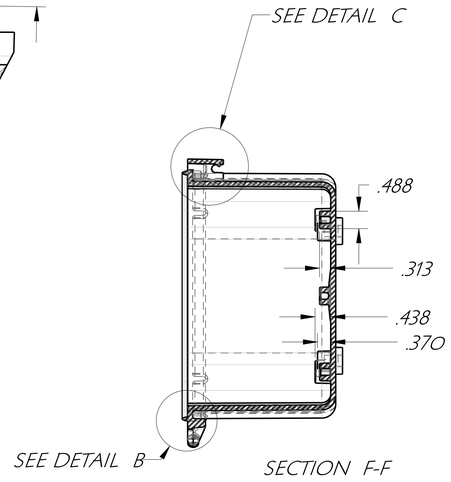


SECTION F-F

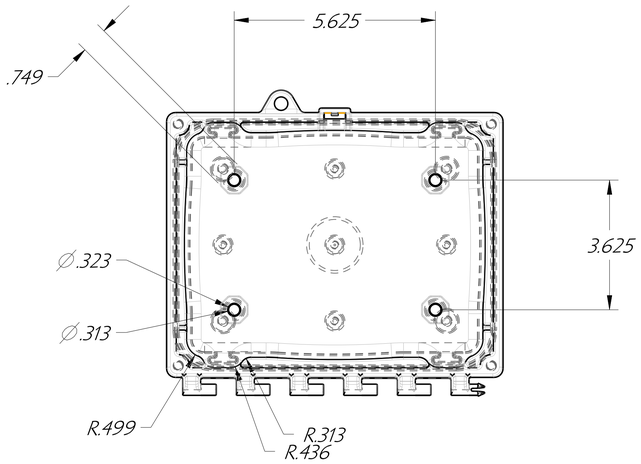


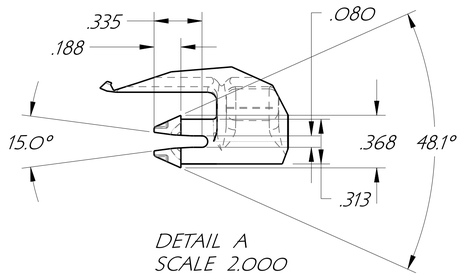


DETAIL A
SCALE 2.000

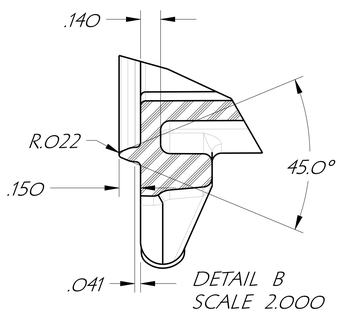


DETAIL B
SCALE 2.000

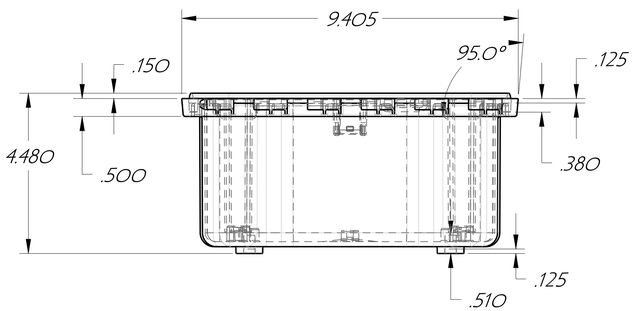


# 8 X 6 ENCLOSURE

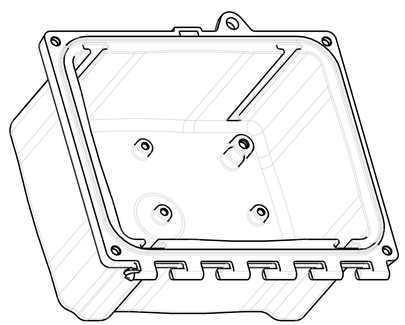

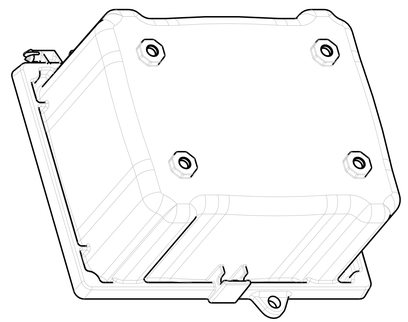

| | | | | | |
|---|---|---|---|---|---|
| DES. C.R.W. | DRN. C.R.W. | CHKD. | | ATTABOX | CUSTOMER |
| APP. | DATE 10/16/07 | SCALE | | | |
| TOLERANCES: | 2 PLACE DEC. ±.010 | FRAC. | PART NAME ENCLOSURE & LID | PART NO. | PART MAT'L POLYCARBONATE |
| | 3 PLACE DEC. ±.005 | ± 1/64 | | | |
| UNLESS OTHERWISE SHOWN | 4 PLACE DEC. ±.0005 | | TOOL DESC. SINGLE CAVITY INJECTION MOLD | SHRINK .006/IN. | SHEET OF |

ПРОМЭЛЕКТРОНИКА/ sales@prom-elec.com

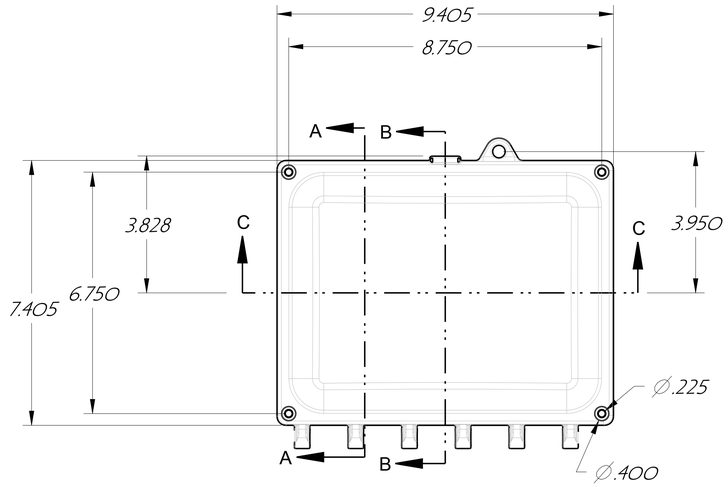


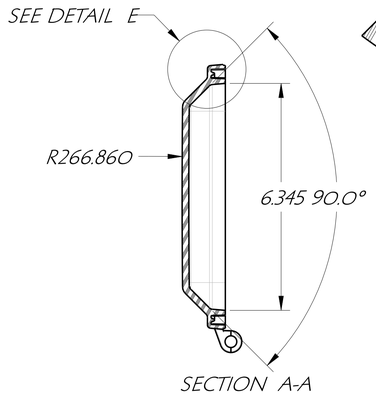


SECTION A-A

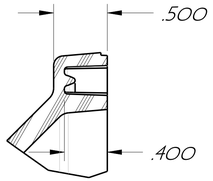


DETAIL E
SCALE 1.500

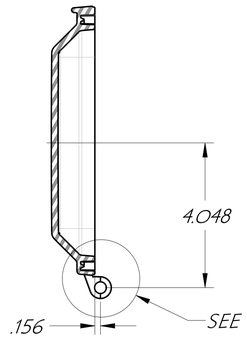


SECTION B-B

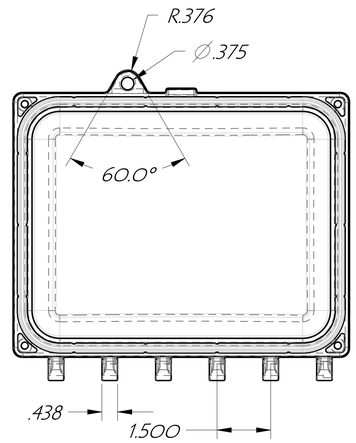


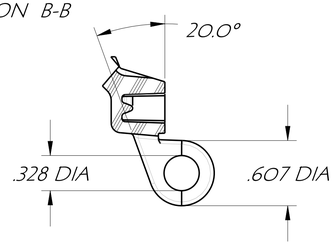


DETAIL F
SCALE 1.500

# 8 X 6 LID

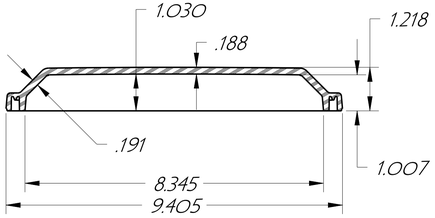


SECTION C-C

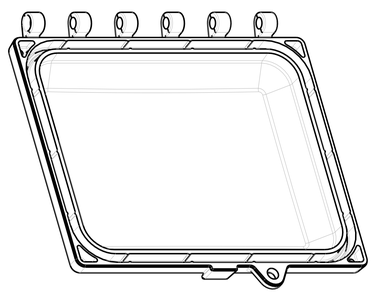

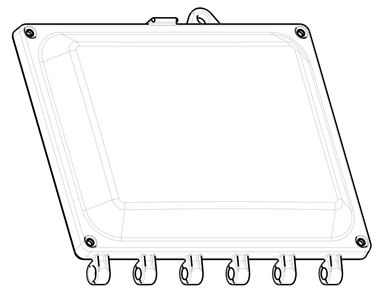

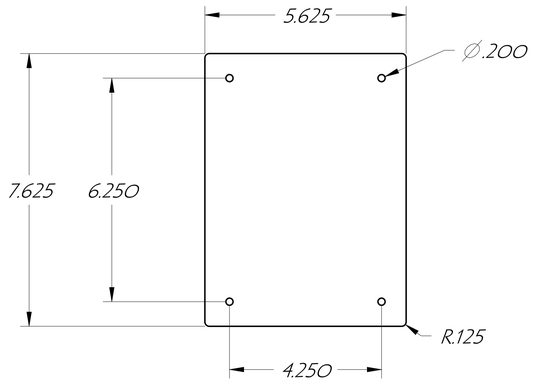


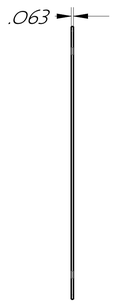


SUB PANEL OR SWING PANEL

| | | | | | |
|---|---|---|---|---|---|
| DES. C.R.W. | DRN. C.R.W. | CHKD. | | | |
| APP. | DATE 10/16/07 | SCALE | | | |
| TOLERANCES: | 2 PLACE DEC. ±.010 | FRAC. ±1/64 | | | |
| UNLESS OTHERWISE SHOWN | 3 PLACE DEC. ±.005 | | | | |
| | 4 PLACE DEC. ±.0005 | | | | |

| | | | |
|---|---|---|---|
| ATTABOX | | CUSTOMER | |
| PART NAME ENCLOSURE & LID | PART NO. | PART MAT'L POLYCARBONATE | |
| TOOL DESC. SINGLE CAVITY INJECTION MOLD | | SHRINK .006/IN. | SHEET OF |

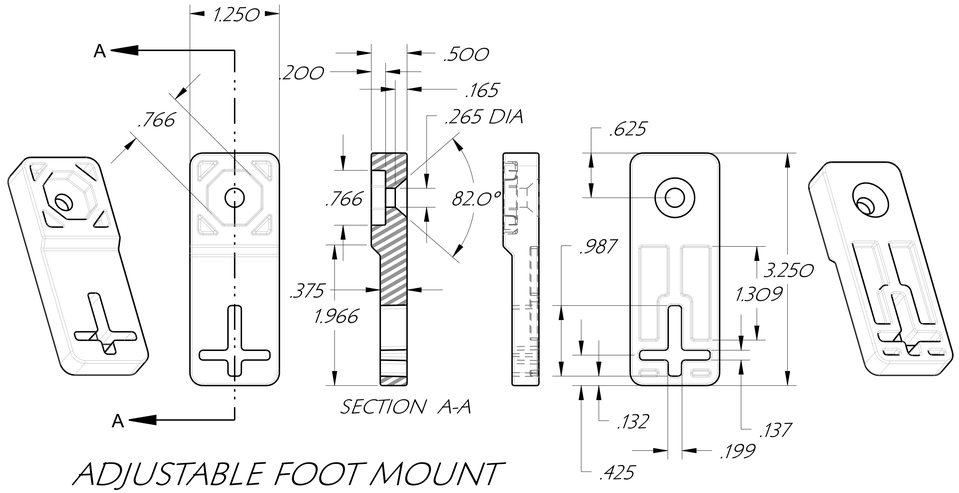


ADJUSTABLE FOOT MOUNT



LID HINGE CAP

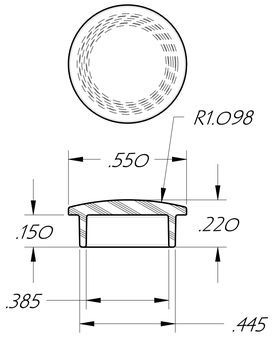


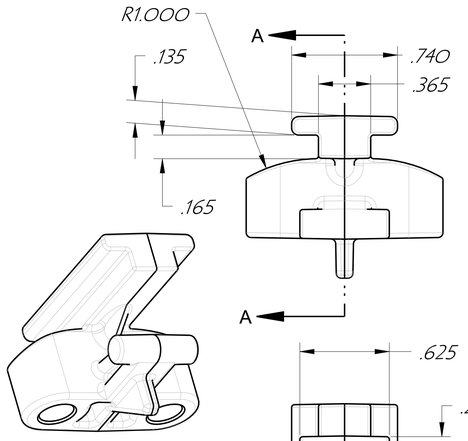


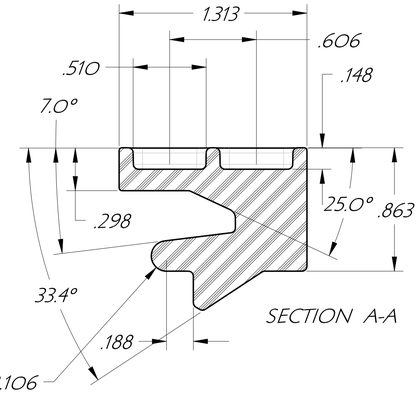


FLUSH PANEL MOUNT

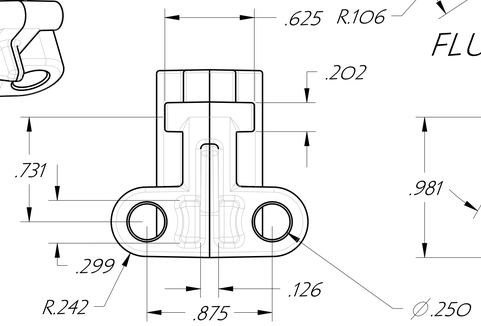


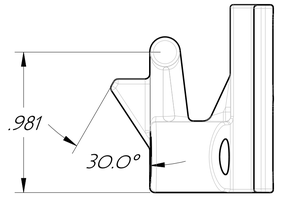


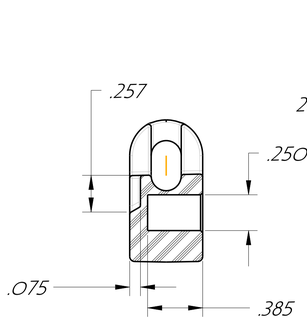


SECTION A-A

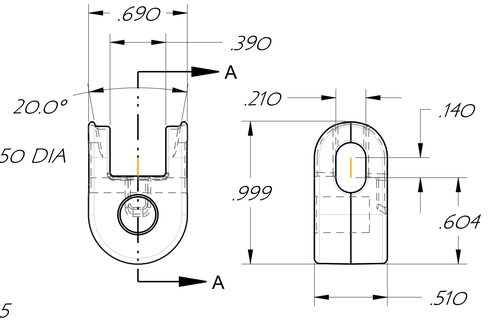


RETRACTING PANEL HINGE

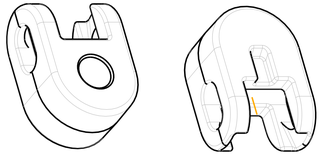



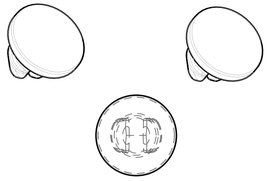

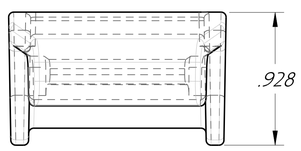


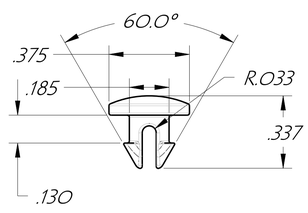


PLUG

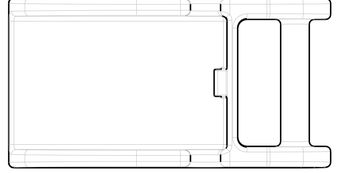

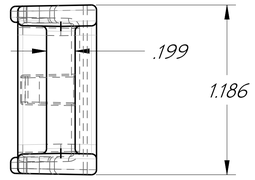


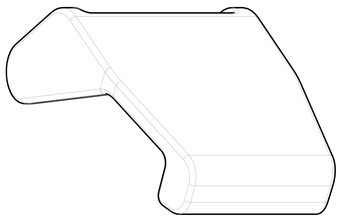

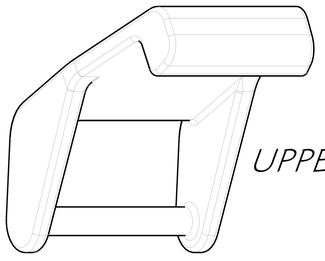

UPPER LATCH

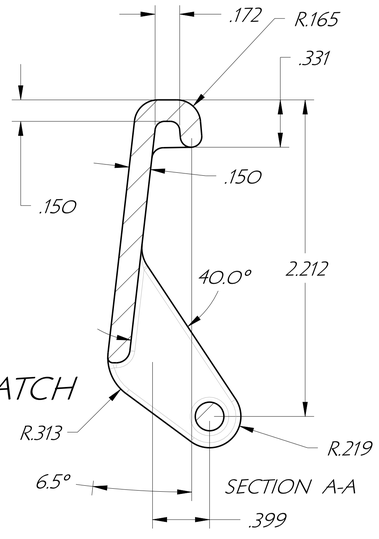


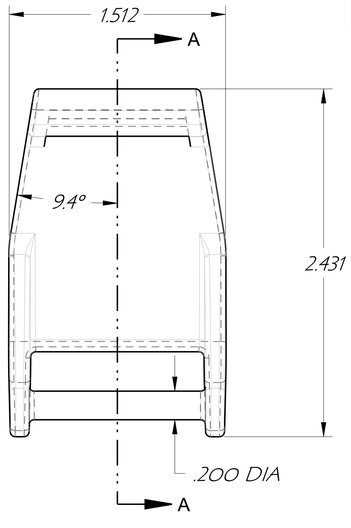


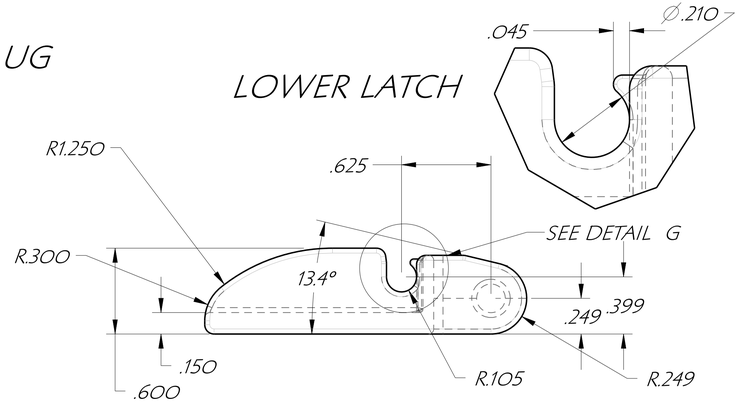


LOWER LATCH

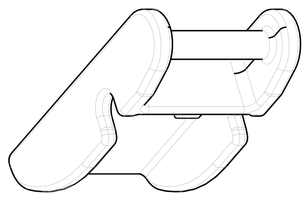

| | | | | | |
|---|---|---|---|---|---|
| DES. C.R.W. | DRN. C.R.W. | CHKD. | ATTABOX | | CUSTOMER |
| APP. | DATE 10/16/07 | SCALE | | | |
| TOLERANCES: | 2 PLACE DEC. ±.010 | FRAC. ±1/64 | PART NAME ENCLOSURE & LID | PART NO. | PART MAT'L POLYCARBONATE |
| UNLESS OTHERWISE SHOWN | 3 PLACE DEC. ±.005<br>4 PLACE DEC. ±.0005 | | TOOL DESC. SINGLE CAVITY INJECTION MOLD | SHRINK .006/IN. | SHEET OF |