# Overview

This guide is designed to help you set up and install the TL70 Modular Tower Light. For complete information on programming, performance, troubleshooting, dimensions, and accessories, please refer to the Product Manual at www.bannerengineering.com. Search for part number 182214 to view the Product Manual. Use of this document assumes familiarity with pertinent industry standards and practices.

# Configuring the Modules




Turn on the appropriate DIP switch to set the order of the components, counting up from the tower light's base.

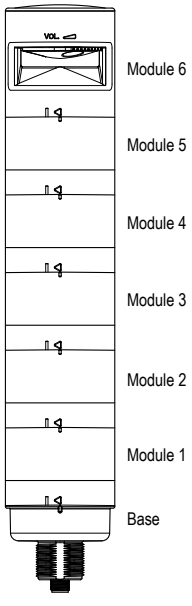


| Assembly Options | | DIP Switches | | | | | | | |
|---|---|---|---|---|---|---|---|---|---|
| | | 1 | 2 | 3 | 4 | 5 | 6 | 7 | 8 |
| Light and Standard Audible Components | Module 1 | ON | | | | | | | |
| | Module 2 | | ON | | | | | | |
| | Module 3 | | | ON | | | | | |
| | Module 4 | | | | ON | | | | |
| | Module 5 | | | | | ON | | | |
| | Module 6 | | | | | | ON | | |
| Light and Module Flash Rate | 3 Hz | | | | | | | ON | OF |
| | 1.5 Hz | | | | | | | ON | ON |
| | Solid On* | | | | | | | OFF | OFF |
| Standard Audible Module Settings | Pulse 1.5 Hz | | | | | | | ON | OFF |
| | Chirp Alarm | | | | | | | ON | ON |
| | Siren Alarm | | | | | | | OFF | ON |
| | Continuous Alarm* | | | | | | | OFF | OFF |

| Assembly Options | | DIP Switches | | | | | | | | | |
|---|---|---|---|---|---|---|---|---|---|---|---|
| | | 1 | 2 | 3 | 4 | 5 | 6 | 7 | 8 | 9 | 10 |
| Loud Audible Module Settings | Pulse 1.5 Hz | | | | | | | ON | OFF | | |
| | Chirp Alarm | | | | | | | ON | ON | | |
| | Siren Alarm | | | | | | | OFF | ON | | |
| | Continuous Alarm* | | | | | | | OFF | OFF | | |
| | Low Intensity* | | | | | | | | | OFF | OFF |
| | Med. Intensity | | | | | | | | | ON | OFF |
| | Med./Loud Intensity | | | | | | | | | OFF | ON |
| | Loud Intensity | | | | | | | | | ON | ON |

* Factory default setting

Original Instructions
19-Aug-25

© Banner Engineering Corp. All rights reserved.
www.bannerengineering.com

182215
p/n: 182215 Rev. H

ПРОМЭЛЕКТРОНИКА/ sales@prom-elec.com

# Assembling the Modules

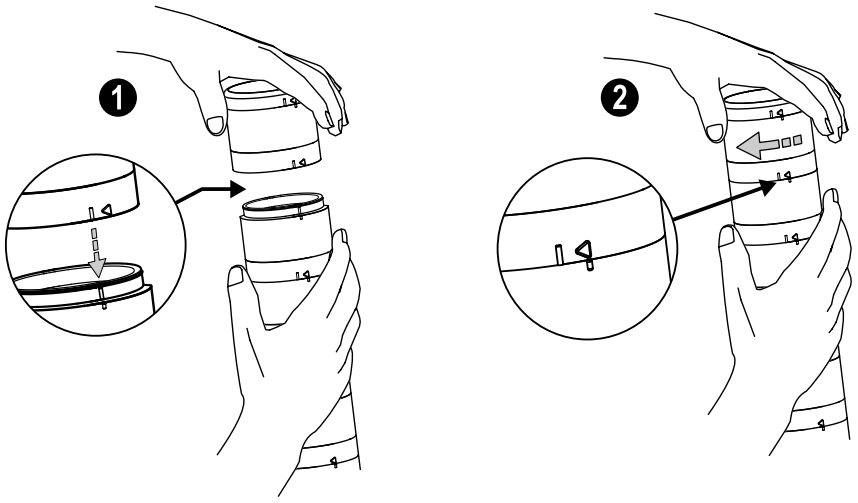


To assemble the modules:

1. Align the notches on each module and press together.
2. Rotate the top module clockwise to lock into place (notches shown in the locked position).

**NOTE:** DIP switches should remain in the default off position.

# Wiring Diagrams

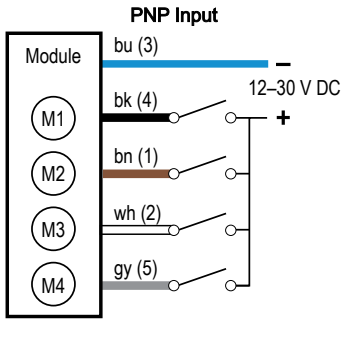


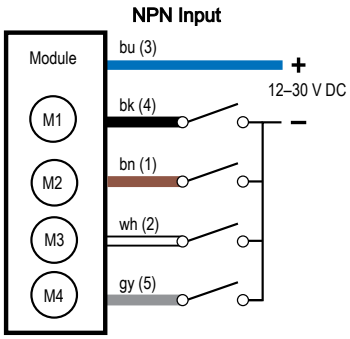


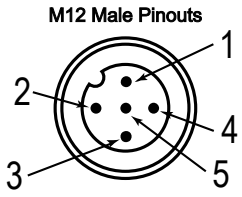


**Key**

1 = brown
2 = white
3 = blue
4 = black
5 = gray

M1 = Module 1
M2 = Module 2
M3 = Module 3
M4 = Module 4

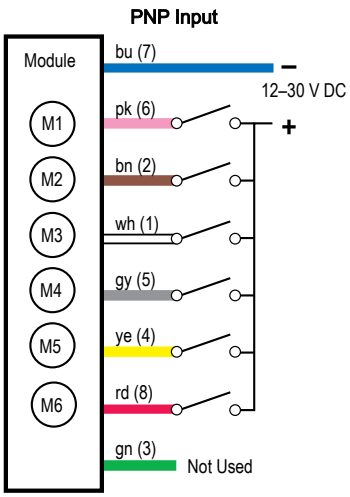


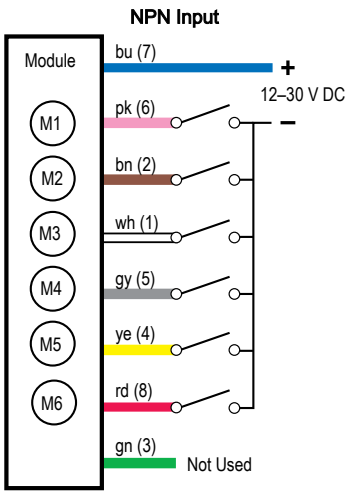


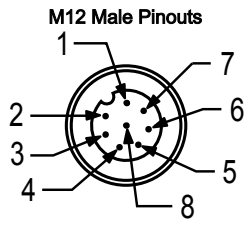


**Key**

1 = white
2 = brown
3 = green
4 = yellow
5 = gray
6 = pink
7 = blue
8 = red

M1 = Module 1
M2 = Module 2
M3 = Module 3
M4 = Module 4
M5 = Module 5
M6 = Module 6


© Banner Engineering Corp. All rights reserved.
www.bannerengineering.com

**NOTE:** Models SG-TL70-ALM and SG-TL70-ALMC are not compatible with NPN input wiring.

**Wiring Terminal Block**

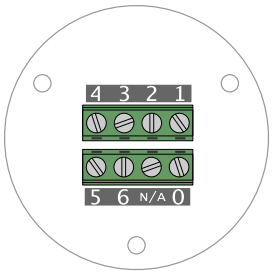


**Terminal Block Key**

0 = DC common
1 = Module 1
2 = Module 2
3 = Module 3
4 = Module 4
5 = Module 5
6 = Module 6

# Specifications

**Supply Voltage and Current**

12 V DC to 30 V DC

| Indicator Color or Audible Model | Maximum Current (mA) | | |
|---|---|---|---|
| | at 12 V DC | at 24 V DC | at 30 V DC |
| Blue, Green, White | 420 | 200 | 150 |
| Red, Yellow, Orange | 285 | 145 | 120 |
| Standard Audible | 30 | 30 | 30 |
| Loud Audible (Intensity 1) | 30 | 28 | 25 |
| Loud Audible (Intensity 2) | 50 | 45 | 40 |
| Loud Audible (Intensity 3) | 165 | 90 | 75 |
| Loud Audible (Intensity 4) | 350 | 160 | 120 |
| Programmable Audible | 290 | 140 | 125 |

**Supply Protection Circuitry**

Protected against transient voltages

**Indicators**

1 to 6 colors depending on model (Green, Red, Yellow, Blue, White, and Orange)

LEDs are independently selected

**Flash Rates:** 1.5 Hz ±10% and 3 Hz ±10%

**Indicator Response Time**

**Off Response:** 150 µs (maximum) at 12 V DC to 30 V DC

**On Response:** 180 ms (maximum) at 12 V DC; 50 ms (maximum) at 30 V DC

**Indicator Characteristics**

| Color | Dominant Wavelength (nm) or Color Temperature (CCT) | Color Coordinates[1] | | Lumen Output (Typical at 25 °C) |
|---|---|---|---|---|
| | | x | y | |
| Green | 525 nm | – | – | 92 |
| Red | 625 nm | – | – | 40 |
| Yellow | 590 nm | – | – | 22 |
| Blue | 470 nm | – | – | 32 |
| White | 5000 K | – | – | 125 |
| Orange | – | 0.66 | 0.33 | 33 |

[1] Refer to CIE 1931 chromaticity diagram or color chart, to show equivalent color with indicated color coordinates.

**Connections**

Integral 5-pin M12 male quick-disconnect connector, 8-pin M12 male quick-disconnect connector, 150 mm (5.9 in) PVC cable with an M12 male quick-disconnect connector, terminal block, or 2 m (6.5 ft) unterminated cable, depending on model

**Terminal Block Models**

14 to 28 AWG wire

**Operating Conditions**

–40 °C to +50 °C (–40 °F to +122 °F)

95% at +50 °C maximum relative humidity (non-condensing)

**Environmental Rating**

IP65

**Audible Alarm**

**Standard Audible:** 2.6 kHz ± 250 Hz oscillation frequency; maximum intensity (typical) 98 dB at 1 m (3.3 ft)

**Loud Audible:** 2.6 kHz ± 250 Hz oscillation frequency; maximum intensity (typical) at 1 m (3.3 ft) (see table)

| DIP Switches | | Maximum Intensity (typical) at 1 meter dB |
|---|---|---|
| 9 | 10 | |
| ON | ON | Intensity 4: 109 dB |
| OFF | ON | Intensity 3: 106 dB |
| ON | OFF | Intensity 2: 101 dB |
| OFF | OFF | Intensity 1: 94 dB |

**Audible Adjustment**

**Standard Audible:** Rotate the cover until the desired volume is reached

**Loud Audible Alarm:** Select the desired volume using DIP switches 9 and 10

**Typical Reduction in Sound Intensity with Audible Adjustment (maximum to minimum):**

- **Standard Audible:** 8 dB
- **Loud Audible:** 15 dB

**Construction**

**Bases, Segments, Covers:** polycarbonate

**Vibration and Mechanical Shock**

Vibration: 10 Hz to 55 Hz, 0.5 mm peak-to-peak amplitude per IEC 60068-2-6

Shock: 15G 11 ms duration, half sine wave per IEC 60068-2-27


© Banner Engineering Corp. All rights reserved.
www.bannerengineering.com

### Certifications

Banner Engineering BV
Park Lane, Culliganlaan 2F bus 3
1831 Diegem, BELGIUM

Turck Banner LTD Blenheim House
Blenheim Court
Wickford, Essex SS11 8YT
GREAT BRITAIN

### Required Overcurrent Protection

**WARNING:** Electrical connections must be made by qualified personnel in accordance with local and national electrical codes and regulations.

Overcurrent protection is required to be provided by end product application per the supplied table.

Overcurrent protection may be provided with external fusing or via Current Limiting, Class 2 Power Supply.

Supply wiring leads < 24 AWG shall not be spliced.

For additional product support, go to www.bannerengineering.com.

| Supply Wiring (AWG) | Required Overcurrent Protection (A) | Supply Wiring (AWG) | Required Overcurrent Protection (A) |
|---|---|---|---|
| 20 | 5.0 | 26 | 1.0 |
| 22 | 3.0 | 28 | 0.8 |
| 24 | 2.0 | 30 | 0.5 |

# Banner Engineering Corp Limited Warranty

Banner Engineering Corp. warrants its products to be free from defects in material and workmanship for one year following the date of shipment. Banner Engineering Corp. will repair or replace, free of charge, any product of its manufacture which, at the time it is returned to the factory, is found to have been defective during the warranty period. This warranty does not cover damage or liability for misuse, abuse, or the improper application or installation of the Banner product.

**THIS LIMITED WARRANTY IS EXCLUSIVE AND IN LIEU OF ALL OTHER WARRANTIES WHETHER EXPRESS OR IMPLIED (INCLUDING, WITHOUT LIMITATION, ANY WARRANTY OF MERCHANTABILITY OR FITNESS FOR A PARTICULAR PURPOSE), AND WHETHER ARISING UNDER COURSE OF PERFORMANCE, COURSE OF DEALING OR TRADE USAGE.**

This Warranty is exclusive and limited to repair or, at the discretion of Banner Engineering Corp., replacement. **IN NO EVENT SHALL BANNER ENGINEERING CORP. BE LIABLE TO BUYER OR ANY OTHER PERSON OR ENTITY FOR ANY EXTRA COSTS, EXPENSES, LOSSES, LOSS OF PROFITS, OR ANY INCIDENTAL, CONSEQUENTIAL OR SPECIAL DAMAGES RESULTING FROM ANY PRODUCT DEFECT OR FROM THE USE OR INABILITY TO USE THE PRODUCT, WHETHER ARISING IN CONTRACT OR WARRANTY, STATUTE, TORT, STRICT LIABILITY, NEGLIGENCE, OR OTHERWISE.**

Banner Engineering Corp. reserves the right to change, modify or improve the design of the product without assuming any obligations or liabilities relating to any product previously manufactured by Banner Engineering Corp. Any misuse, abuse, or improper application or installation of this product or use of the product for personal protection applications when the product is identified as not intended for such purposes will void the product warranty. Any modifications to this product without prior express approval by Banner Engineering Corp will void the product warranties. All specifications published in this document are subject to change; Banner reserves the right to modify product specifications or update documentation at any time. Specifications and product information in English supersede that which is provided in any other language. For the most recent version of any documentation, refer to: www.bannerengineering.com.

For patent information, see www.bannerengineering.com/patents.


© Banner Engineering Corp. All rights reserved.
www.bannerengineering.com