Performance PM8 Gateway to One PM8 Node Quick Start Guide

Introduction

This Quick Start Guide describes how to start using the PM8 Gateway to PM8 Node using their default settings to send

- One discrete signal from the Node to the Gateway
- One discrete signal from the Gateway to the Node

Wire the PM Node to the PM Gateway

1. Remove the radio top to access the wiring terminals for the PMx models.
   The PMxC model wiring terminals are accessible from outside the device.
2. Wire the discrete input and outputs on the Node and Gateway according to the wiring diagram shown.
   Both the Node and Gateway have the same wiring board layout.
3. Wire 10 to 30 V DC power to the V+ terminal.
4. Wire ground/DC common to the V- terminal.
5. If you removed the top cover, replace it and apply power.
   After applying power, the Gateway's LED 1 is solid green and the Node's LED 1 is flashing red to indicate the Node is not communicating with the Gateway. The Node will not begin communicating with the Gateway until after you run the binding procedure.

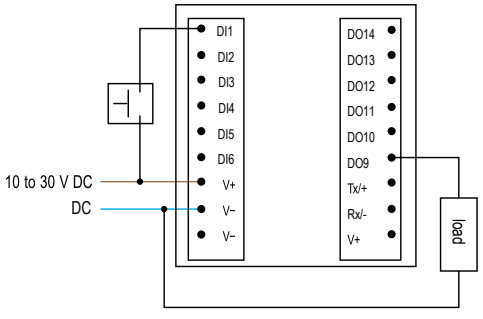

Bind the PM Node to the PM Gateway

Binding Nodes to their Gateway ensures the Nodes only exchange data with the Gateway they are bound to. To create your network, bind the Nodes to the Gateway.

1. To enter binding mode on the Gateway, triple-click button 2.
   The red LEDs flash alternately.
2. To enter binding mode on the -PMx Node, triple-click button 2.
   The red LEDs flash alternately. After the Node is bound, the LEDs are both solid red for a few seconds. The Node cycles its power, then enters RUN mode.
3. Set the Node's rotary dials to 0 (left dial) and 1 (right dial) or the pre-defined mapping will not work.



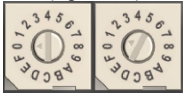

4. Exit binding mode on the Gateway by single-clicking either button 1 or button 2.
   LED 1 is solid green.

Verify Radio Communication

If the Gateway and Node is communicating:

- Gateway's LED 1 is solid green
- Until communication is established with the Gateway, the Node's LED 2 flashes red
- After communication is established, the Node's LED 1 flashes green

Test the Configuration

MAP1N. By default (MAP 1N map), inputs on the Node control outputs on the Gateway and inputs on the Gateway control outputs on the Node, as shown in the mapping diagram. Set the rotary dials for Node 1 to 01, Node 2 to 02, Node 3 to 03, through Node 7 set to 07.

Original Instructions
20-Nov-24

© Banner Engineering Corp. All rights reserved.

173571
p/n: 173571 Rev. D

ПРОМЭЛЕКТРОНИКА/ sales@prom-elec.com

MAP 1N IO Mapping

Gateway	Maps to	Node 1
Discrete IN 1	→	Discrete OUT 9
Discrete IN 2	→	Discrete OUT 10
Discrete IN 3	→	Discrete OUT 11
Discrete IN 4	→	Discrete OUT 12
Discrete IN 5	→	Discrete OUT 13
Discrete IN 6	→	Discrete OUT 14

Gateway	Maps to	Node 1
Discrete OUT 9	←	Discrete IN 1
Discrete OUT 10	←	Discrete IN 2
Discrete OUT 11	←	Discrete IN 3
Discrete OUT 12	←	Discrete IN 4
Discrete OUT 13	←	Discrete IN 5
Discrete OUT 14	←	Discrete IN 6

MAP2N. In another commonly used mapping configuration, defined as the MAP 2N map, the Gateway's inputs are split between the outputs of Node 1 and Node 2, and inputs from each Node are mapped to the Gateway's outputs.

MAP 2N IO Mapping

Gateway	Maps to	Node 1	Node 2
Discrete IN 1	→	Discrete OUT 9	
Discrete IN 2	→	Discrete OUT 10	
Discrete IN 3	→	Discrete OUT 11	
Discrete IN 4	→		Discrete OUT 9
Discrete IN 5	→		Discrete OUT 10
Discrete IN 6	→		Discrete OUT 11

Gateway	Maps to	Node 1	Node 2
Discrete OUT 9	←	Discrete IN 1	
Discrete OUT 10	←	Discrete IN 2	
Discrete OUT 11	←	Discrete IN 3	
Discrete OUT 12	←		Discrete IN 1
Discrete OUT 13	←		Discrete IN 2
Discrete OUT 14	←		Discrete IN 3

MAP1R. The next I/O mapping option, MAP 1R, uses the Gateway as a repeater and maps Node 1's inputs to Node 7's outputs, and Node 7's inputs to Node 1's outputs.

MAP 1R IO Mapping

Node 1	Maps to	Node 7
Discrete IN 1	→	Discrete OUT 9
Discrete IN 2	→	Discrete OUT 10
Discrete IN 3	→	Discrete OUT 11
Discrete IN 4	→	Discrete OUT 12
Discrete IN 5	→	Discrete OUT 13
Discrete IN 6	→	Discrete OUT 14

Node 1	Maps to	Node 7
Discrete OUT 9	←	Discrete IN 1
Discrete OUT 10	←	Discrete IN 2
Discrete OUT 11	←	Discrete IN 3
Discrete OUT 12	←	Discrete IN 4
Discrete OUT 13	←	Discrete IN 5
Discrete OUT 14	←	Discrete IN 6

Final steps. Wire the discrete inputs and outputs into your application. Refer to the PM8 Node and PM8 Gateway datasheets for additional information. The Gateway can support up to six Nodes with the available pre-mapped configurations, which are listed in the Gateway's datasheet.

© Banner Engineering Corp. All rights reserved.