# BMHPS Heated Enclosure Power Supply

*Power Transformer for Heated Enclosure Windows*



## Models

| Model Number | Description | Primary | Secondary |
|---|---|---|---|
| BMHPS4 | Power Supply for Two BMHE4 Enclosures | 105 to 130V ac | 23V ac |
| BMHPS5 | Power Supply for Two BMHE5 Enclosures | | 27V ac |
| BMHPS6 | Power Supply for Two BMHE6 Enclosures | | 29V ac |
| BMHPS6-74232 | Power Supply for Two BMHE6 Enclosures | 210 to 230V ac | |

## Connections

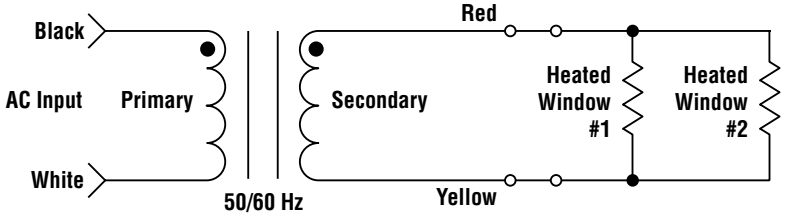


## Dimensions

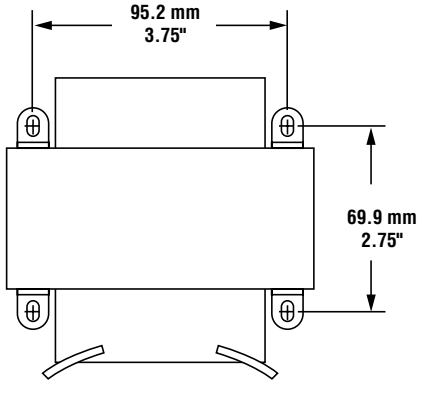


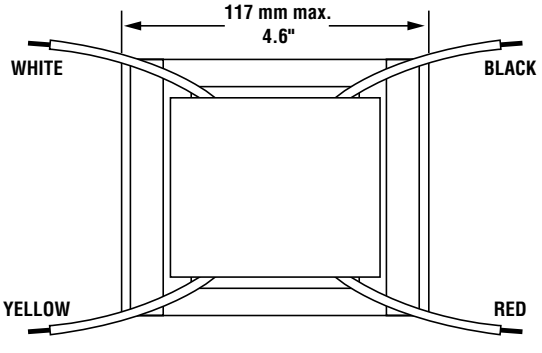


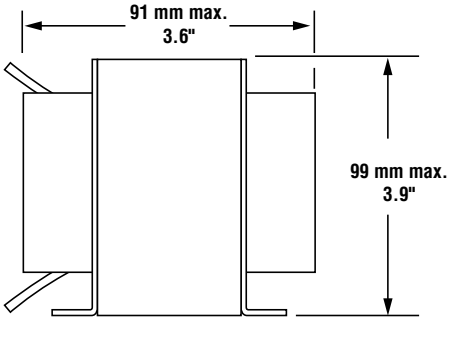


Printed in USA 05/05 P/N 55555 rev. B

Banner Engineering Corp., 9714 Tenth Ave. No., Minneapolis, MN 55441 • Phone: 763.544.3164 • www.bannerengineering.com • Email: sensors@baneng.com

ПРОМЭЛЕКТРОНИКА/ sales@prom-elec.com