

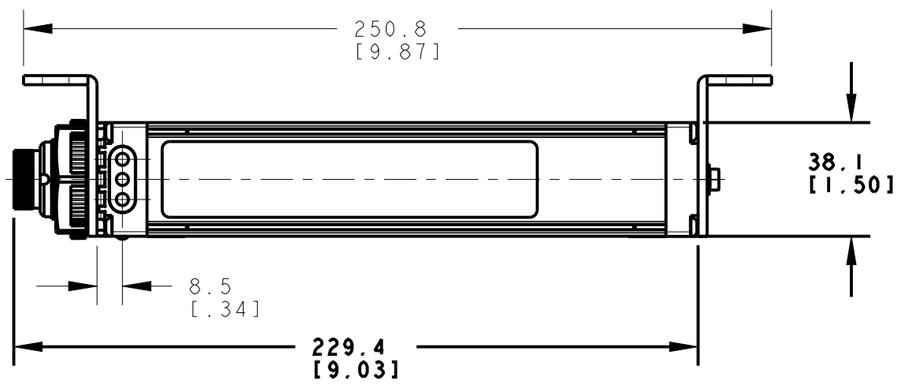

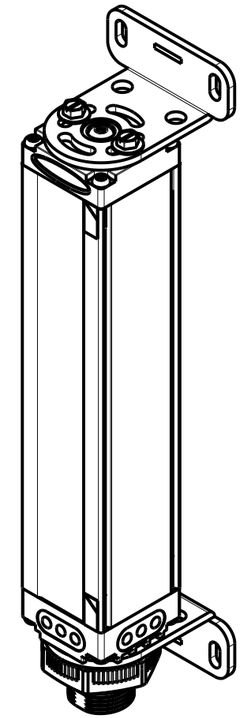

ISOMETRIC VIEW
SCALE 1:2

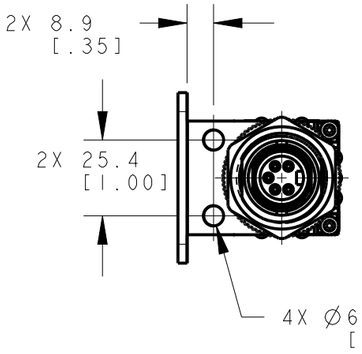

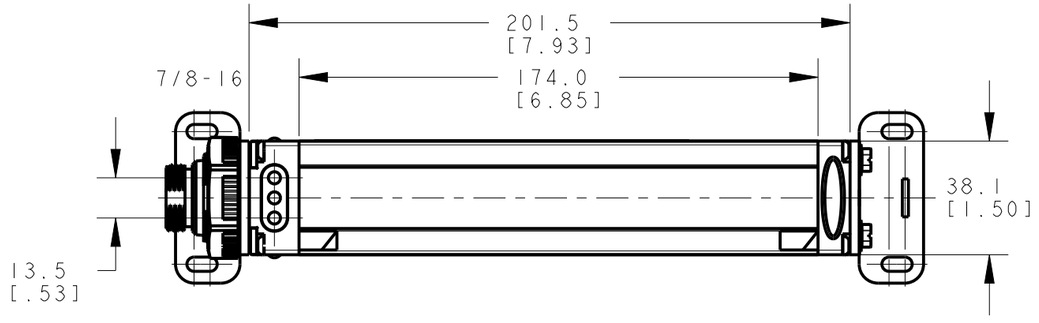

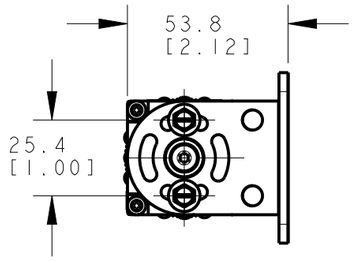

NOTES:
1. ALL DIMENSIONS ARE MILLIMETERS [INCHES] UNLESS OTHERWISE NOTED.
2. REFER TO "www.bannerengineering.com" FOR ADDITIONAL DATA AND SPECIFICATIONS.

This drawing is the property of BANNER ENGINEERING CORP. Any use or reproduction, in any form, without prior written permission of Banner is prohibited.
© Banner Engineering Corp.

THIRD ANGLE PROJECTION

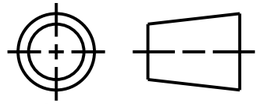

BANNER ENGINEERING CORP.
www.bannerengineering.com

TITLE

BMRL616/BRML632

SIZE	DRAWING NO.	REV.
B	169463	A
SCALE 1:2		SHEET 1 OF 1

CREO

ПРОМЭЛЕКТРОНИКА/ sales@prom-elec.com