RP-QM90 Series Rope Pull Switch

Datasheet

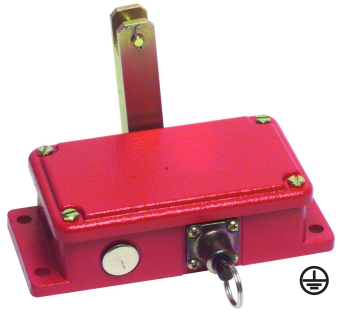

- Positive-opening safety contacts (IEC 60947-5-1), not dependent upon springs
- Contacts latch open when rope is pulled; requires manual reset
- Heavy-duty die cast metal housing, rated IP65, suitable for demanding industrial environments
- Rope spans up to 100 m (330 ft), with the switch mounted in the center of the span
- Both safety contacts are closed with normal rope tension, and open when rope is pulled or if rope breaks (or if tension is reduced from normal amount)
- Extra contacts for monitoring or to provide dual-channel input to a safety module
- Switch actuator position clearly indicates when rope has proper tension for operation
- Long life, switch rated at 1 million mechanical operations, minimum
- Protective Earth Terminal (IEC 60947-1)

Model	Max. Overall Rope Length	Run Position	Cable Pulled (either side)	Cable Break (either side)	Switching Diagram
RP-QM90F-100L	100 m (330 ft)	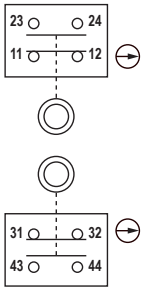	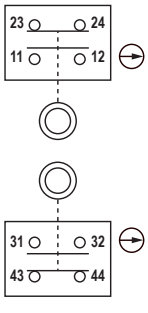	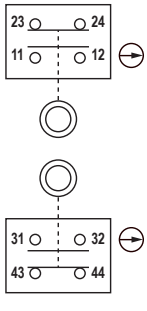	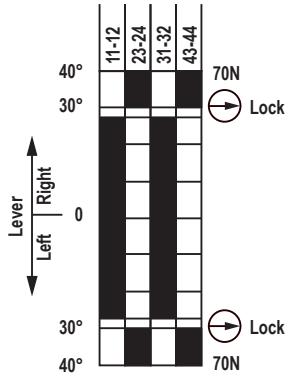

Contacts: Open Closed

Note: This symbol for a positive-opening safety contact (IEC 60947-5-1) is used in the switching diagram to identify the point in actuator travel where the normally-closed safety contact is fully open.

Important... Read This First

Regarding the Use of Rope Pull Switches. In the United States, the functions that Banner rope pull switches are intended to perform are regulated by the Occupational Safety and Health Administration (OSHA). Whether or not any particular rope pull switch installation meets all applicable OSHA requirements depends upon factors that are beyond the control of Banner Engineering Corp. These factors include the details of how the switches are applied, installed, wired, operated, and maintained.

Banner Engineering Corp. has attempted to provide complete application, installation, operation, and maintenance instructions in this document. Direct any questions regarding the use or installation of rope pull switches to the factory applications department.

Banner Engineering Corp. recommends that rope pull switches be applied according to the guidelines set forth in the standards listed below. In addition, the user is responsible for ensuring all local, state, and national laws, rules, codes, and regulations relating to the use of Banner rope pull switches in each application are satisfied. Extreme care is urged that all legal requirements are met and that all installation and maintenance instructions are followed.

Applicable U.S. Standards

OSHA Code of Federal Regulations: Title 29, Parts 1900 to 1910

Available from: Superintendent of Documents, Government Printing Office, P.O. Box 371954, Pittsburgh, PA 15250-7954, Tel: 202-512-1800

ANSI B11 Standards for Machine Tools Safety

Contact: Safety Director, AMT – The Association for Manufacturing Technology, 7901 Jones Branch Drive, Suite 900, McLean, VA 22102-4206 USA, www.amtonline.org

Original Document
62086 Rev. G

13 April 2022

62086

ПРОМЭЛЕКТРОНИКА/ sales@prom-elec.com

Applicable European and International Standards

EN ISO 12100 Safety of Machinery – Basic Concepts, General Principles for Design

ISO 13852 (EN 294) Safety of Machinery—Safety Distances to Prevent Danger Zones Being Reached by the Upper Limbs

ISO 13853 (EN 811) Safety of Machinery—Safety Distances to Prevent Danger Zones Being Reached by the Lower Limbs

EN ISO 13849-1 Safety-Related Parts of Control Systems

EN 13855 (EN 999) The Positioning of Protective Equipment in Respect to Approach Speeds of Parts of the Human Body

ISO 14119 (EN 1088) Interlocking Devices Associated with Guards – Principles for Design and Selection

EN 60204-1 Electrical Equipment of Machines Part 1: General Requirements

IEC 60947-5-1 Low Voltage Switchgear – Electromechanical Control Circuit Devices

Contact: IHS Markit (Global Engineering Documents), 15 Inverness Way East, Englewood, CO 80112 USA, https://global.ihs.com/

Overview

The model RP-QM90F-100L is a two-sided rope pull switch in a heavy-duty metal housing. When used with steel wire rope, it can provide stop actuation along conveyors and similar machinery. This model is designed to be mounted in the center of a long, straight run of cable (up to 100 meters/330 ft total); this model switch does not accommodate corners along the cable's length. Red PVC-covered 4 mm diameter wire rope is recommended.

The switch features redundant terminal pairs. Terminals 11-12 and 31-32 will act concurrently and identically to latch open when the rope is pulled, regardless of which side of the switch the rope is pulled. Terminals 23-24 and 43-44 are normally open monitoring contacts; they will act concurrently and identically to close when the rope is pulled. If the rope should break or become slack for any reason, the switch actuator will pull to the taut side, so contact behavior for a rope break condition is the same as that for a rope pull.

These rope pull switches are not safeguarding devices, in that they do not protect personnel from injury. They provide the same function as other types of stop switches.

This rope pull switch features "latching" operation. When the rope is pulled, the switch contacts 11-12 and 31-32 open and remain open until the built-in reset actuator (the ring) is manually pulled to reset.

WARNING:

- **Not a safeguarding device**
- Failure to follow these instructions could result in serious injury or death.
- This device is not considered a safeguarding device because it requires an overt action by an individual to stop machine motion or hazards. A safeguarding device limits or eliminates an individual's exposure to a hazard without action by the individual or others. This device cannot be substituted for required safeguarding. Refer to the applicable standards to determine those requirements.

Figure 1. Run Position: Proper Rope Tension

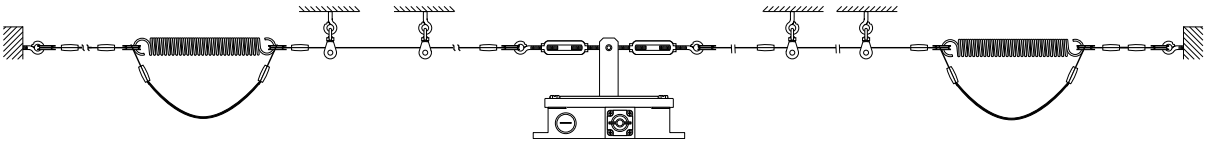

Figure 2. Rope Pulled: Contacts 11-12 and 31-32 Open

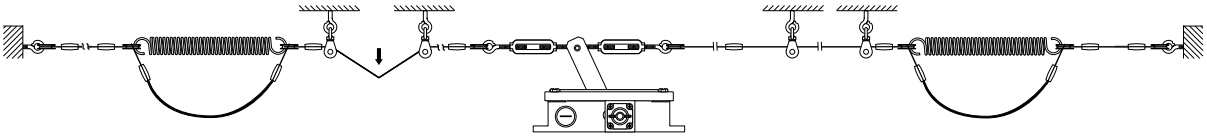

Figure 3. Rope Break or Slack: Contacts 11-12 and 31-32 Open

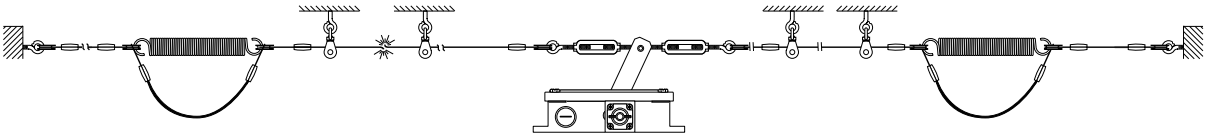

Mechanical Installation

- The rope should be easily accessible and visible along its entire length. Markers or flags may be fixed on the rope to increase its visibility
- Mounting points, including support points, must be rigid and allow sufficient space around the rope to allow easy access
- The rope should be free of friction at all supports. Pulleys are recommended
- The rope may not be routed around a corner, for this model.
- Never run rope through conduit or other tubing

- Never attach weights to the rope
- Temperature affects rope tension. The wire rope expands (lengthens) when temperature increases, and contracts (shrinks) when temperature decreases. Significant temperature variations require frequent checks of the tension adjustment
- Do not exceed the maximum specified total rope length. Banner offers models for other spans; contact Banner Engineering or visit www.bannerengineering.com for model selection

Figure 4. Assembly of Rope and Hardware

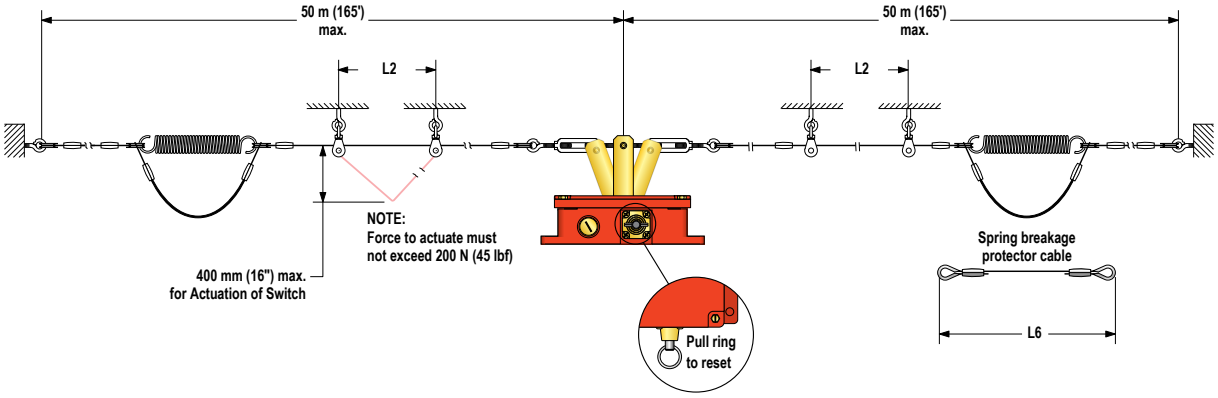

Springs Used	Max. Span Between Pulleys (L2)	Spring Breakage Protector Cable Length (L6)
Tensioning Spring #1	1 m to 2 m (3 ft to 6.5 ft)	380 mm to 410 mm (15.0 inches to 16.1 inches)
Tensioning Spring #2	2 m to 2.5 m (6.5 ft to 8 ft)	310 mm to 320 mm (12.2 inches to 12.6 inches)

All hardware is supplied by the user. The switch mounting holes are on a standard limit switch mounting pattern of 30 x 60 millimeters, and accept M5 (#10) hardware. Wire rope and associated hardware may be ordered separately; see *Accessories*.

Figure 5. Correct Rope Tension Indicator

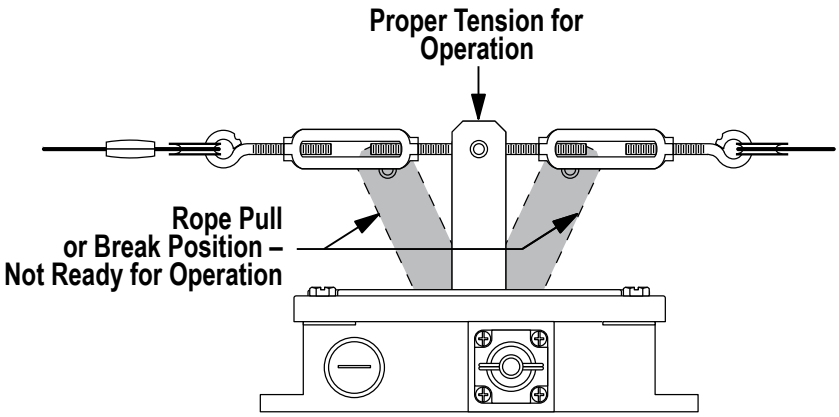

1. Mount the switch securely on a solid, stationary surface, approximately in the center of the rope span.
2. Fasten an eye bolt at the far ends of the rope span, up to 50 m (165 ft) from the switch. The anchor for the eye bolts also must be solid and stationary, to withstand the constant tension of the rope.
3. Assemble the rope, as shown. Keep the rope's PVC cover intact along its complete length. Tensioning springs are required to ensure compliance with direction-independent actuation of the wire rope.
4. Use pulleys (recommended) or eye bolts at each support point. If tensioning spring #1 is used, the span between pulleys may not exceed 2 m (6.5 ft). If tensioning spring #2 is used, the span between pulleys may not exceed 2.5 m (8 ft).
5. Apply tension to the rope using the turnbuckles on both sides of the switch actuator. Apply tension until both springs are stretched equally and the switch actuator is perpendicular to the switch housing. (Contacts 11-12 and 31-32 will close and contacts 23-24 and 43-44 will open when the reset ring is pulled.)
6. Pull hard on the rope and reset the latch several times. If contacts 11–12 and 31-32 remain open following the reset, further tighten the turnbuckle, until the contacts close.
7. Repeat step 6 until contacts 11–12 and 31-32 remain closed for the Run condition

Electrical Installation

Access to the Wiring Chamber—The wiring chamber is accessed via a cover plate (remove four screws). A conduit adapter is supplied to convert the 20 millimeter threaded entrance to 1/2-inch NPT. An accessory cable gland which fits the metric thread is also available.

Wiring—Because the model **RP-QM90F-100L** has redundant pairs of safety contacts, this switch may be wired for either single-channel or dual-channel output to a safety device. Monitor contacts, in either case, may be wired as desired to an external alarm device. Wire the two switch contacts in series.

Single-Channel Output—Wire safety contacts 11-12 and 31-32 in series to the input of the safety device.

Dual-Channel Output—Wire contact 11-12 to one input channel of the safety device and contact 31-32 to the other input channel of the safety device.

Figure 6. Single-Channel Safety Device

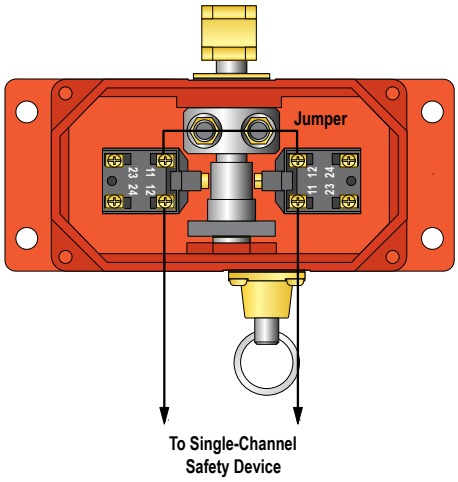

Figure 7. Dual-Channel Safety Device

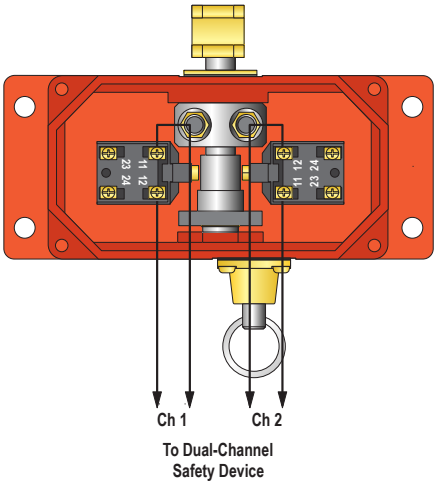

Maintenance/Checkout

At switch installation or replacement and at machine set up, a Designated Person [1] must test each switch for proper machine shutdown response and check the switch(es) and installation for proper operation, physical damage, mounting (looseness), and excessive environmental contamination. This must also take place on a periodic schedule determined by the user, based on the severity of the operating environment and the frequency of switch actuations. This is generally determined by a risk assessment, such as the one contained in ANSI B11.0. Adjust, repair, or replace components as needed. If inspection reveals contamination on the switch, thoroughly clean the switch and eliminate the cause of the contamination. Replace the switch and/or appropriate components when any parts or assemblies are damaged, broken, deformed, or badly worn; or if the electrical/mechanical specifications (for the environment and operating conditions) have been exceeded. Always test the control system for proper functioning under machine control conditions after performing maintenance, replacing the switch, or replacing any component of the switch.

Additional items that should be included in the checkout and/or regularly scheduled maintenance of a rope pull system:

- Check for proper rope tension and adjust as needed
- Verify free operation (no binding) of the rope and proper tripping when the rope is pulled
- Periodically lubricate the pulleys and other moving parts associated with the rope
- Repair any loose or damaged hardware, worn/frayed rope (cable), missing red rope sheathing or flags/markers (if used)
- Remove or clean off any contamination and eliminate its cause

Specifications

Contact Rating
10 A at 24 V AC
10 A at 110 V AC
6 A at 230 V AC
6 A at 24 V DC
2.5 kV maximum transient tolerance
NEMA A300 P300

European Rating
Rated Insulation Voltage (U_i): 400 V AC
Conventional Thermal Current (I_{the}): 10 A
Rated Operational Voltage (U_e): 240 V
Utilization Category: AC-15, U_e/I_e 240 V/3 A

Contact Material
Silver-nickel allow

Environmental Rating
IP65

Operating Conditions
Temperature: –30 °C to +80 °C (–22 °F to +176 °F)

Weight
3.8 Kg (8.4 lbs)

Recommended Rope Size
4 mm diameter steel rope

[1] A Designated Person is identified in writing by the employer as being appropriately trained to perform a specified checkout procedure.

Maximum Switching Speed
50 operations per minute

Maximum Rope Pull Length
100 m (330 ft); equal lengths up to 50 m (165 ft) on either side of switch

Short Circuit Protection
10 amp gG Fuse
Recommended external fusing or overload protection.

Mechanical Life
1 million operations

Wire Connections
Screw terminals with pressure plates accept the following wire sizes – Stranded and solid: 20 AWG (0.5 mm^2) to 16 AWG (1.5 mm^2) for one wire

Cable Entry
M20 × 1.5 threaded entrance. Adapter supplied to convert M20 × 1.5 to ½"-14 NPST threaded entrance

Construction
Aluminum alloy die-cast

B10d
2×10^6 cycles at DC-13; 24 V; I_{e2} = 0.1 A

Required Overcurrent Protection

WARNING: Electrical connections must be made by qualified personnel in accordance with local and national electrical codes and regulations.

Overcurrent protection is required to be provided by end product application per the supplied table.
Overcurrent protection may be provided with external fusing or via Current Limiting, Class 2 Power Supply.
Supply wiring leads < 24 AWG shall not be spliced.
For additional product support, go to www.bannerengineering.com.

Supply Wiring (AWG)	Required Overcurrent Protection (Amps)
20	5.0
22	3.0
24	2.0
26	1.0
28	0.8
30	0.5

Certifications

Banner Engineering Europe
Park Lane, Culliganlaan 2F
bus 3, 1831 Diegem,
BELGIUM

Turck Banner LTD Blenheim House, Blenheim Court, Wickford, Essex SS11 8YT, Great Britain

Dimensions

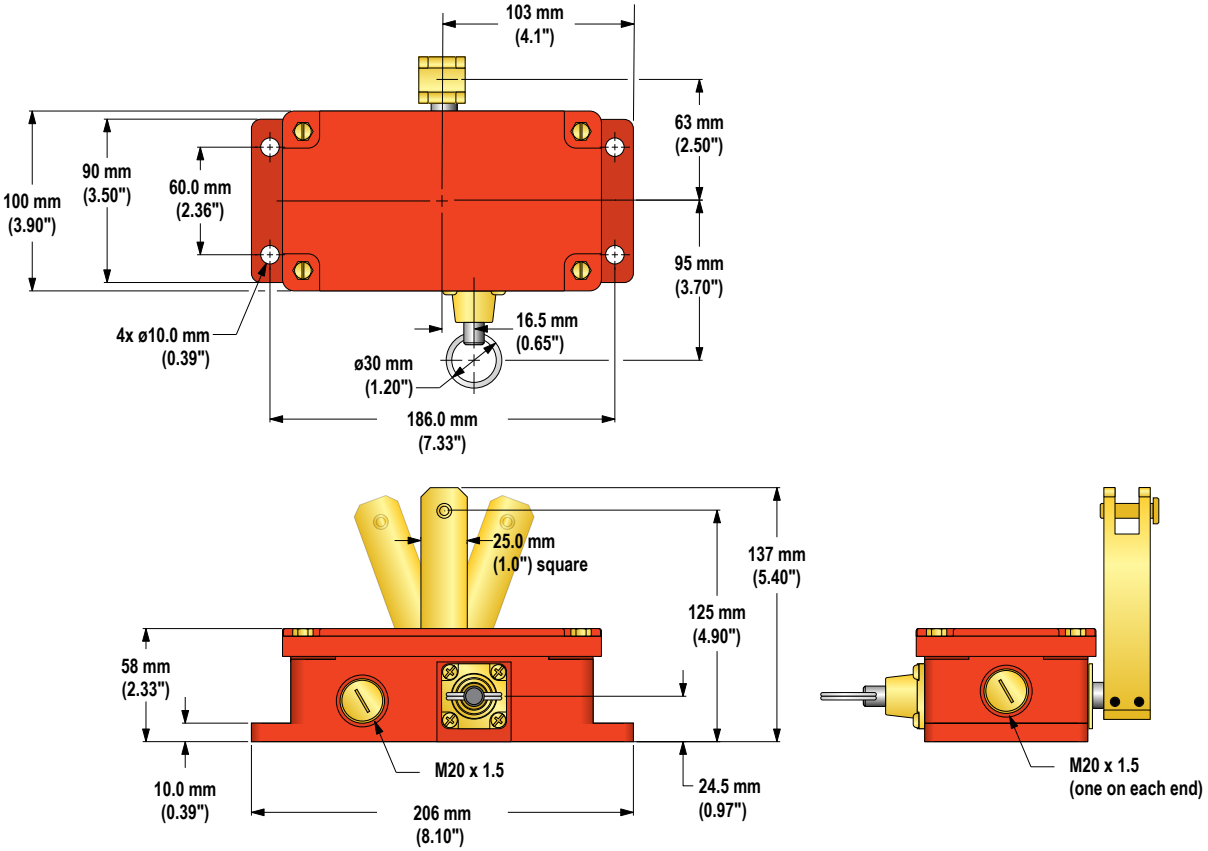

Accessories

Cable Glands

Model	Size	For Cable Diameter	Dimensions	Used With
SI-QM-CGM20	M20 × 1.5 Metal	5.0 to 12.0 mm (0.20 to 0.47 inches)	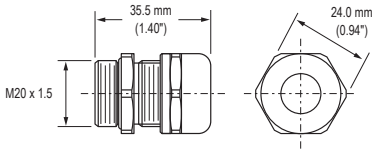	RP-RM83 Rope Pull Switch RP-LM40 Rope Pull Switch RP-QM72/QMT72 Rope Pull Switch RP-QM90 Rope Pull Switch SI-LM40 Safety Interlock Switch

Conduit Adapters

Model	Size	Thread Conversion	Dimensions	Used With
SI-QM-M20	½ in-14 NPT Metal	M20 × 1.5 to ½ in-14 NPT	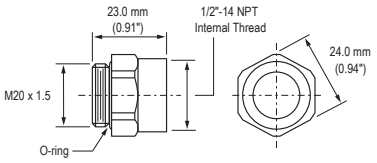	SI-LM40 Safety Interlock Switches RP-LM40 Rope Pull Switches RP-QM72/QMT72 Rope Pull Switches RP-QM90 Rope Pull Switches RP-RM83 Rope Pull Switches

One conduit adapter is supplied with each switch.

Components for the Wire Rope Assembly

Figure 8. Wire Rope Assembly Components

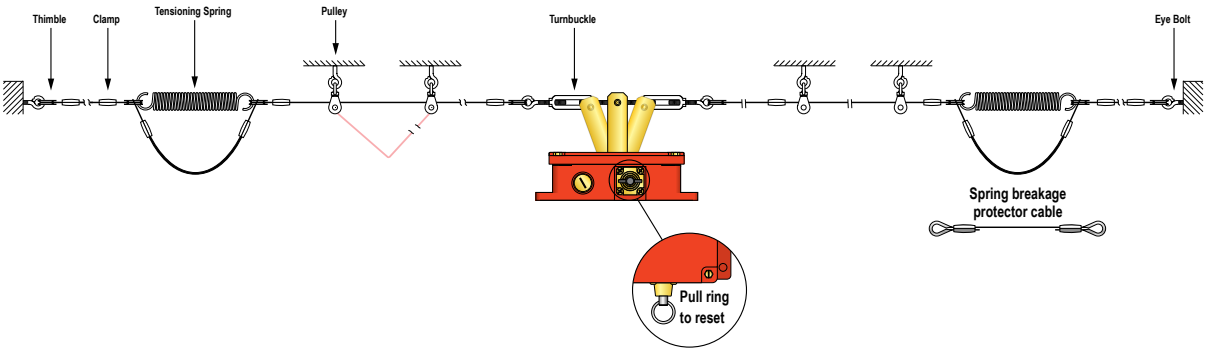

Model	Length	Description	Wire Rope
RPA-C3-20	20 m (65.6 ft)	4 mm steel wire rope with 0.5 mm red PVC jacket (unterminated)	
RPA-C3-100	100 m (328.1 ft)		

Model	Quantity	Description	Thimble
RPA-T3-4	4	Thimble for 4 mm wire rope	

Model	Quantity	Description	Clamp
RPA-CC3-4	4	Clamp for 4 mm wire rope	

Model	Quantity	Description	Turnbuckle
RPA-TA2-1	4	#5 Turnbuckle	

Model	Quantity	Description	Eye Bolt
RPA-EB2-1	1	5/16 in-18 Eye bolt (3 in bolt shaft)	

Model	Quantity	Description	Pulley
RPA-P1-1	1	Hanging pulley for in-line use	

For use on runs of 10 meters or less:

Model	Quantity	Description	Tensioning Spring
RPA-S1-1	1	Tensioning spring #1	

For use on runs more than 10 meters:

Model	Quantity	Description	Tensioning Spring
RPA-S2-1	1	Tensioning spring #2	

Product Support and Maintenance

Repairs

Contact Banner Engineering for troubleshooting of this device. **Do not attempt any repairs to this Banner device; it contains no field-replaceable parts or components.** If the device, device part, or device component is determined to be defective by a Banner Applications Engineer, they will advise you of Banner's RMA (Return Merchandise Authorization) procedure.

Important: If instructed to return the device, pack it with care. Damage that occurs in return shipping is not covered by warranty.

EU/UK Declaration of Conformity (DoC)

Banner Engineering Corp. herewith declares that these products are in conformity with the provisions of the listed directives, regulations, and all essential health and safety requirements have been met. For the complete DoC, please go to www.bannerengineering.com.

Product	Directive
RP-QM90 Series Rope Pull Switch	EU: Low Voltage Directive 2014/35/EU UK: Electrical Equipment (Safety) Regulations 2016

Representative in EU: Spiridon Lachanidis, Managing Director, **Banner Engineering Europe** Park Lane, Culliganlaan 2F bus 3, 1831 Diegem, BELGIUM

Representative in UK: Tony Coghlan, Managing Director, **Turck Banner LTD** Blenheim House, Blenheim Court, Wickford, Essex SS11 8YT, Great Britain

Banner Engineering Corp. Limited Warranty

Banner Engineering Corp. warrants its products to be free from defects in material and workmanship for one year following the date of shipment. Banner Engineering Corp. will repair or replace, free of charge, any product of its manufacture which, at the time it is returned to the factory, is found to have been defective during the warranty period. This warranty does not cover damage or liability for misuse, abuse, or the improper application or installation of the Banner product.

THIS LIMITED WARRANTY IS EXCLUSIVE AND IN LIEU OF ALL OTHER WARRANTIES WHETHER EXPRESS OR IMPLIED (INCLUDING, WITHOUT LIMITATION, ANY WARRANTY OF MERCHANTABILITY OR FITNESS FOR A PARTICULAR PURPOSE), AND WHETHER ARISING UNDER COURSE OF PERFORMANCE, COURSE OF DEALING OR TRADE USAGE.

This Warranty is exclusive and limited to repair or, at the discretion of Banner Engineering Corp., replacement. **IN NO EVENT SHALL BANNER ENGINEERING CORP. BE LIABLE TO BUYER OR ANY OTHER PERSON OR ENTITY FOR ANY EXTRA COSTS, EXPENSES, LOSSES, LOSS OF PROFITS, OR ANY INCIDENTAL, CONSEQUENTIAL OR SPECIAL DAMAGES RESULTING FROM ANY PRODUCT DEFECT OR FROM THE USE OR INABILITY TO USE THE PRODUCT, WHETHER ARISING IN CONTRACT OR WARRANTY, STATUTE, TORT, STRICT LIABILITY, NEGLIGENCE, OR OTHERWISE.**

Banner Engineering Corp. reserves the right to change, modify or improve the design of the product without assuming any obligations or liabilities relating to any product previously manufactured by Banner Engineering Corp. Any misuse, abuse, or improper application or installation of this product or use of the product for personal protection applications when the product is identified as not intended for such purposes will void the product warranty. Any modifications to this product without prior express approval by Banner Engineering Corp will void the product warranties. All specifications published in this document are subject to change; Banner reserves the right to modify product specifications or update documentation at any time. Specifications and product information in English supersede that which is provided in any other language. For the most recent version of any documentation, refer to: www.bannerengineering.com.

For patent information, see www.bannerengineering.com/patents.

© Banner Engineering Corp. All rights reserved