Q2F Fixed-Field Miniature Low Profile Sensor Product Manual

Original Instructions
p/n: 251209 Rev. A
25-Feb-26
© Banner Engineering Corp. All rights reserved. www.bannerengineering.com

ПРОМЭЛЕКТРОНИКА/ sales@prom-elec.com

Contents

Chapter 1 Product Description 3
1.1 Models 4
1.2 Features and Indicators 4

Chapter 2 Specifications 5
2.1 Dimensions 6
2.2 Performance Curves 8

Chapter 3 Installation Instructions 9
3.1 Mount the Device 9
3.2 Wiring Diagrams 9

Chapter 4 Accessories 10
4.1 Cordsets 10

Chapter 5 Product Support and Maintenance 11
5.1 Clean with Mild Detergent and Warm Water 11
5.2 Repairs 11
5.3 Contact Us 11
5.4 Banner Engineering Corp Limited Warranty 11

© Banner Engineering Corp. All rights reserved. www.bannerengineering.com

Chapter Contents

1.1 Models 4
1.2 Features and Indicators 4

Chapter 1 Product Description



- Flat, low-profile housing enables sensing in space-constrained applications and embedded installs where traditional housings will not fit
- Fixed-field sensing with sharp cutoff distances (10 mm, 15 mm, 30 mm, and 45 mm) provides stable detection in tight zones near rails, brackets, and fixture surfaces, with reliable, consistent performance across varying colors and surface finishes, including dark and low-reflectivity targets
- Reliably detects targets down to 0.1 mm for presence/absence verification of tiny features and small components close to backgrounds
- M2/M3 mounting options and M8, M12, or flying-lead connections simplify installation and integration while supporting consistent mounting and faster replacement
- Cost-efficient design reduces barriers to standardizing sensors across machines and in fixtures

WARNING:

- **Do not use this device for personnel protection**
- Using this device for personnel protection could result in serious injury or death.
- This device does not include the self-checking redundant circuitry necessary to allow its use in personnel safety applications. A device failure or malfunction can cause either an energized (on) or de-energized (off) output condition.

WARNING:

- **N'utilisez pas ce dispositif pour la protection du personnel.**
- L'utilisation de ce dispositif pour la protection du personnel pourrait entraîner des blessures graves ou mortelles.
- Ce dispositif n'est pas équipé du circuit redondant d'autodiagnostic nécessaire pour être utilisé dans des applications de protection du personnel. Une panne ou un dysfonctionnement du dispositif peut entraîner l'activation ou la désactivation de la sortie.

WARNING:

- **Verwenden Sie dieses Gerät nicht zum Schutz des Personals**
- Die Verwendung dieses Geräts zum Schutz des Personals kann zu schweren Verletzungen oder zum Tod führen.
- Dieses Gerät verfügt nicht über die selbstüberwachenden redundanten Schaltungen, die für Personenschutz-Anwendungen erforderlich sind. Ein Geräteausfall oder Defekt kann zu unvorhersehbarem Schaltverhalten des Ausgangs führen.

© Banner Engineering Corp. All rights reserved.
www.bannerengineering.com

1.1 Models

Family	Output Logic	Output	Mounting Hole	Sensing Mode		Connection
Q2F	A	P	2	FF30	-	2M
	A = Light Operate R = Dark Operate	P = PNP N = NPN	2 = M2 3 = M3	FF10 = Fixed Field with 10 mm Cutoff FF15 = Fixed Field with 15 mm Cutoff FF30 = Fixed Field with 30 mm Cutoff FF45 = Fixed Field with 45 mm Cutoff		2M = 2 m cable Q = 150 mm 4-pin M8 Pigtail Q5 = 150 mm 4-pin M12 Pigtail

1.2 Features and Indicators

The Q2F Fixed Field sensor ignores objects beyond the set cutoff distance. This sensor can be used in most situations with varying object color and position or with varying background conditions.



1. Green Power Indicator
2. Yellow Status Indicator
   - On = Light sensed
   - Flashing = marginal operating condition

© Banner Engineering Corp. All rights reserved.
www.bannerengineering.com

Chapter Contents

2.1 Dimensions..... 6
2.2 Performance Curves 8

Chapter 2 Specifications

Supply Voltage
10 V DC to 30 V DC (10% maximum ripple within specified limits) at less than 20 mA, exclusive of load

Supply Protection Circuitry
Protected against reverse polarity and transient voltages

Sensing Beam
Visible red LED, 640 nm

Output Configuration
Rating: 50 mA

Off-state leakage current: < 10 µA at 30 V DC

ON-state saturation voltage: < 2.3 V at 50 mA

Protected against output short-circuit, continuous overload, and false pulse on power-up

Output Response
850 µs, OFF to ON and ON to OFF

Note: 120-millisecond delay on power-up; outputs do not conduct during this time

Repeatability
125 µs

Adjustments
None

Indicators
Two LED indicators

Green solid: Power on

Amber solid: Light sensed

Amber flashing: Marginal sensing condition

Connections
-2M models: 2 m (6.5 ft) unterminated 4-wire PVC-jacketed cable

-Q models: 150 mm (6 in) PVC-jacketed cable with a 4-pin M8 male quick-disconnect connector

-Q5 models: 150 mm (6 in) PVC-jacketed cable with a 4-pin M12 male quick-disconnect connector

Construction
PC housing, lens cover; PVC cable

Environmental Rating
IP65

Operating Conditions
–25 °C to +55 °C (–13 °F to +131 °F)

95% at +50 °C maximum relative humidity (non-condensing)

Application Notes
To ignore shiny backgrounds, tilt the sensor so light is reflected away from sensor.

Certifications

c UL us LISTED Industrial Control Equipment 3TJJ

Required Overcurrent Protection

WARNING: Electrical connections must be made by qualified personnel in accordance with local and national electrical codes and regulations.

Overcurrent protection is required to be provided by end product application per the supplied table.

Overcurrent protection may be provided with external fusing or via Current Limiting, Class 2 Power Supply.

Supply wiring leads < 24 AWG shall not be spliced.

For additional product support, go to www.bannerengineering.com.

Supply Wiring (AWG)	Required Overcurrent Protection (A)	Supply Wiring (AWG)	Required Overcurrent Protection (A)
20	5.0	26	1.0
22	3.0	28	0.8
24	2.0	30	0.5

© Banner Engineering Corp. All rights reserved.

2.1 Dimensions

All measurements are listed in millimeters [inches], unless noted otherwise. The measurements provided are subject to change.

Figure 1. M2 Models

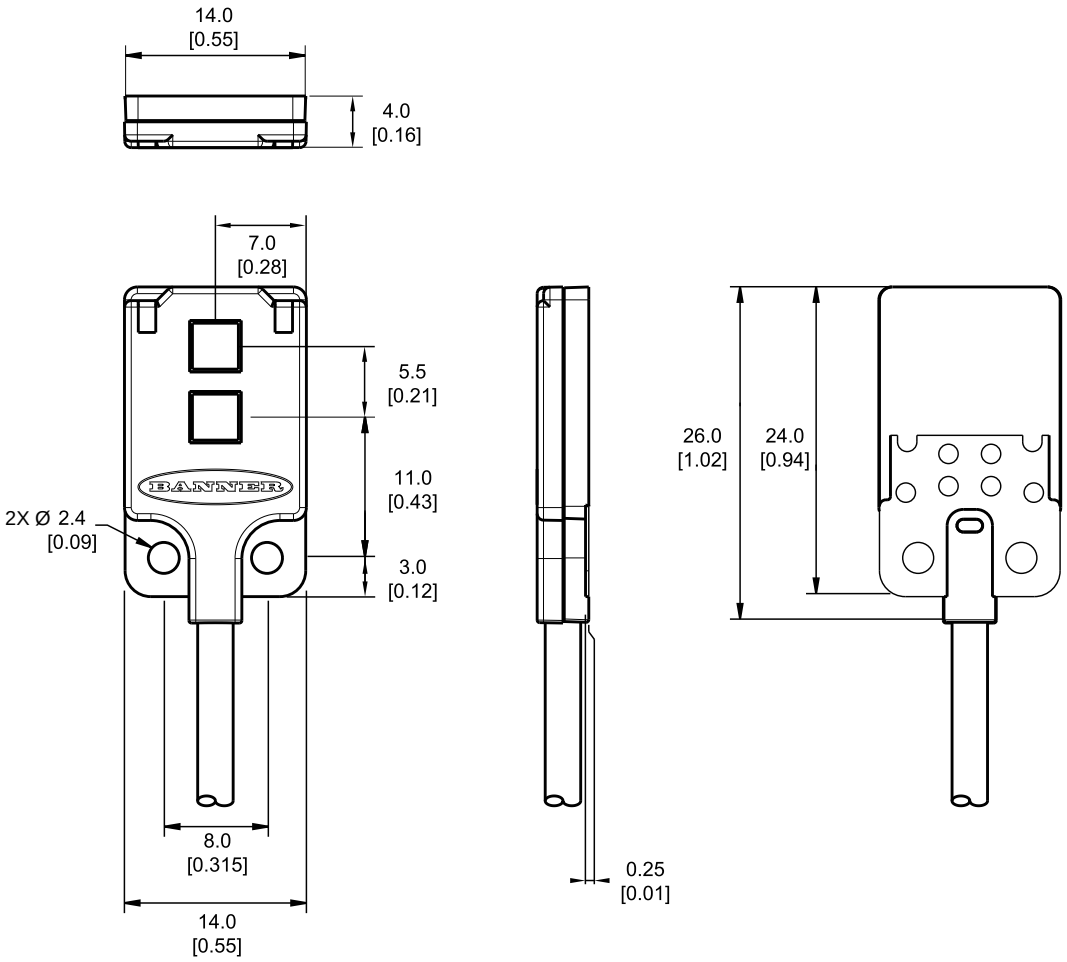

© Banner Engineering Corp. All rights reserved.

Figure 2. M3 Models

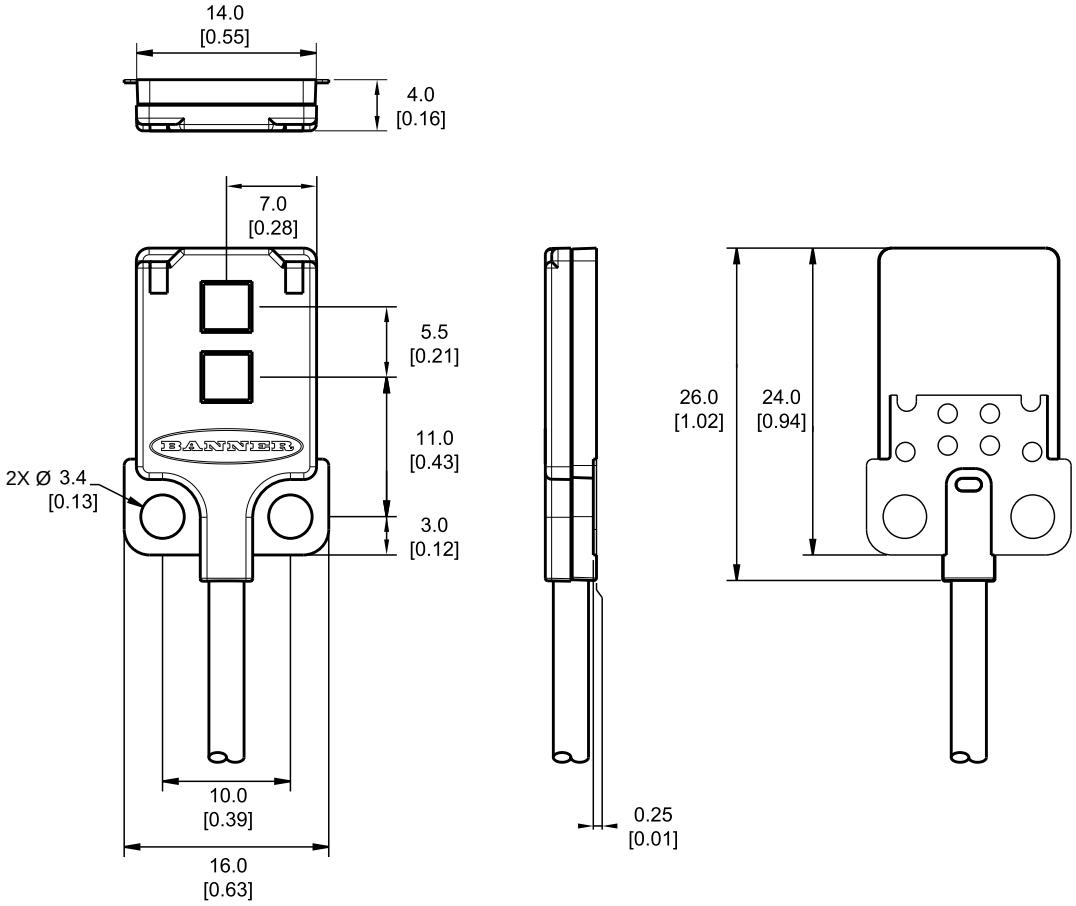

© Banner Engineering Corp. All rights reserved.
www.bannerengineering.com

2.2 Performance Curves

Figure 3. Excess Gain (10 mm Models)

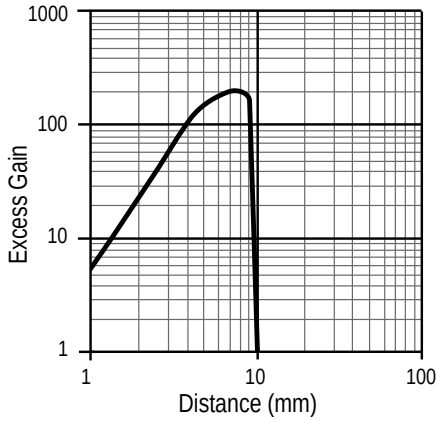

Typical Performance
Spot Size: 1.2 mm at 10 mm
Cutoff variation due to 90% to 6%; Color shift ≤ 0.6 mm

Figure 4. Excess Gain (15 mm Models)

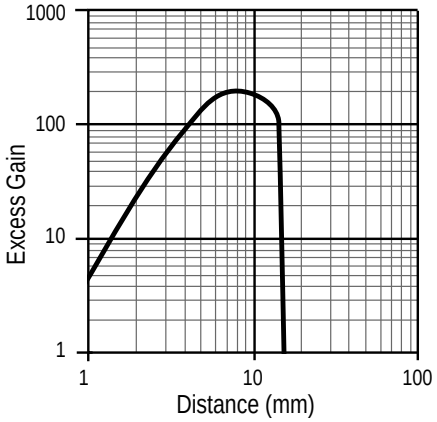

Typical Performance
Spot Size: 1.4 mm at 15 mm
Cutoff variation due to 90% to 6%; Color shift ≤ 0.5 mm

Figure 5. Excess Gain (30 mm Models)

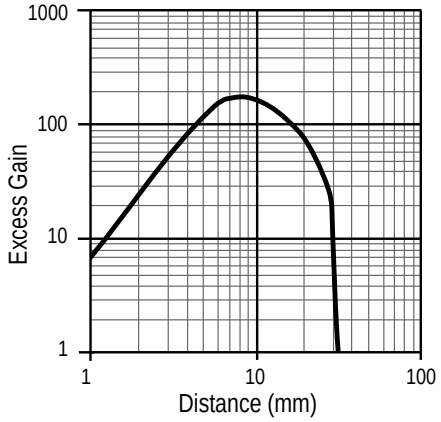

Typical Performance
Spot Size: 2.6 mm at 30 mm
Cutoff variation due to 90% to 6%; Color shift ≤ 1.7 mm

Figure 6. Excess Gain (45 mm Models)

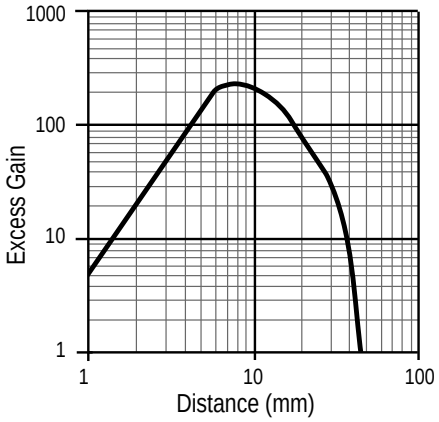

Typical Performance
Spot Size: 4.1 mm at 45 mm
Cutoff variation due to 90% to 6%; Color shift ≤ 12.5 mm

© Banner Engineering Corp. All rights reserved.
www.bannerengineering.com

Chapter Contents

3.1 Mount the Device 9
3.2 Wiring Diagrams 9

Chapter 3 Installation Instructions

3.1 Mount the Device

1. If a bracket is needed, mount the device onto the bracket.
2. Mount the device (or the device and the bracket) to the machine or equipment at the desired location. Do not tighten the mounting screws at this time.
3. Check the device alignment.
4. Tighten the mounting screws to secure the device (or the device and the bracket) in the aligned position.

3.2 Wiring Diagrams

Quick disconnect wiring diagrams are functionally identical.

NPN Models

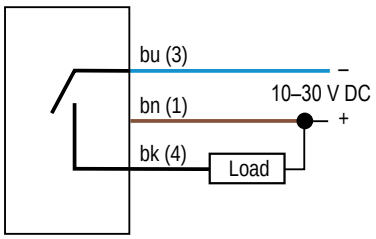

PNP Models

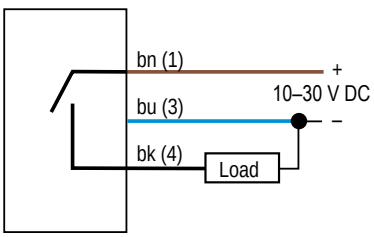

Key: 4-pin A-Code M12 Male

1 = Brown
3 = Blue
4 = Black

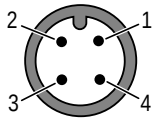

Key: 4-pin A-Code M8 Male

1 = Brown
3 = Blue
4 = Black

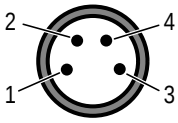

© Banner Engineering Corp. All rights reserved.
www.bannerengineering.com

Chapter Contents

4.1 Cordsets 10

Chapter 4 Accessories

4.1 Cordsets

4-pin Single-Ended M8 Female Cordsets (datasheet p/n 236623)				
Model	**Length**	**Dimensions (mm)**	**Pinout (Female)**	
BC-M8F4-24-0.5	0.5 m (1.64 ft)	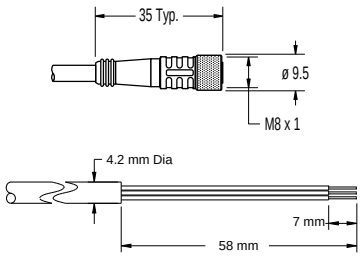	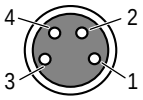	1 = Brown 2 = White 3 = Blue 4 = Black
BC-M8F4-24-1	1 m (3.28 ft)			
BC-M8F4-24-2	2 m (6.56 ft)			
BC-M8F4-24-5	5 m (16.4 ft)			
BC-M8F4-24-8	8 m (26.25 ft)			
BC-M8F4-24-10	10 m (30.81 ft)			

4-pin Single-Ended M12 Female Cordsets (datasheet p/n 235937)				
Model	**Length**	**Dimensions (mm)**	**Pinout (Female)**	
BC-M12F4-22-1	1 m (3.28 ft)	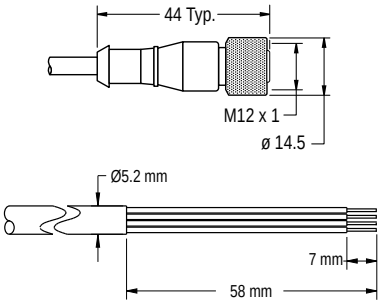	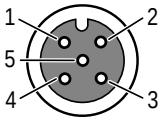	1 = Brown 2 = White 3 = Blue 4 = Black 5 = Unused
BC-M12F4-22-2	2 m (6.56 ft)			
BC-M12F4-22-5	5 m (16.4 ft)			
BC-M12F4-22-8	8 m (26.25 ft)			
BC-M12F4-22-10	10 m (30.81 ft)			
BC-M12F4-22-15	15 m (49.2 ft)			
BC-M12F4-22-20	20 m (65.61 ft)			
BC-M12F4-22-25	25 m (82.02 ft)			
BC-M12F4-22-30	30 m (98.42 ft)			

4-pin Single-Ended M12 Female Right-Angle Cordsets (datasheet p/n 235937)				
Model	**Length**	**Dimensions (mm)**	**Pinout (Female)**	
BC-M12F4A-22-1	1 m (3.28 ft)	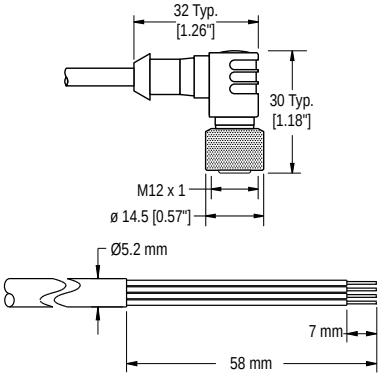	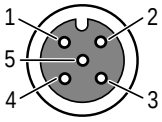	1 = Brown 2 = White 3 = Blue 4 = Black 5 = Unused
BC-M12F4A-22-2	2 m (6.56 ft)			
BC-M12F4A-22-5	5 m (16.4 ft)			
BC-M12F4A-22-8	8 m (26.25 ft)			
BC-M12F4A-22-10	10 m (30.81 ft)			
BC-M12F4A-22-15	15 m (49.2 ft)			

© Banner Engineering Corp. All rights reserved.
www.bannerengineering.com

Chapter Contents

5.1 Clean with Mild Detergent and Warm Water 11
5.2 Repairs 11
5.3 Contact Us 11
5.4 Banner Engineering Corp Limited Warranty 11

Chapter 5 Product Support and Maintenance

5.1 Clean with Mild Detergent and Warm Water

Handle the sensor with care during installation and operation. Sensor windows soiled by fingerprints, dust, water, oil, etc. create stray light that may degrade the peak performance of the sensor.

Wipe down the device with a soft cloth dampened with a mild detergent and warm water solution. Do not use any other chemicals for cleaning.

5.2 Repairs

Contact Banner Engineering for troubleshooting of this device. **Do not attempt any repairs to this Banner device; it contains no field-replaceable parts or components.** If the device, device part, or device component is determined to be defective by a Banner Applications Engineer, they will advise you of Banner's RMA (Return Merchandise Authorization) procedure.

> **IMPORTANT:** If instructed to return the device, pack it with care. Damage that occurs in return shipping is not covered by warranty.

5.3 Contact Us

Banner Engineering Corp. | 9714 Tenth Avenue North | Plymouth, MN 55441, USA | Phone: + 1 888 373 6767

For worldwide locations and local representatives, visit www.bannerengineering.com.

5.4 Banner Engineering Corp Limited Warranty

Banner Engineering Corp. warrants its products to be free from defects in material and workmanship for one year following the date of shipment. Banner Engineering Corp. will repair or replace, free of charge, any product of its manufacture which, at the time it is returned to the factory, is found to have been defective during the warranty period. This warranty does not cover damage or liability for misuse, abuse, or the improper application or installation of the Banner product.

THIS LIMITED WARRANTY IS EXCLUSIVE AND IN LIEU OF ALL OTHER WARRANTIES WHETHER EXPRESS OR IMPLIED (INCLUDING, WITHOUT LIMITATION, ANY WARRANTY OF MERCHANTABILITY OR FITNESS FOR A PARTICULAR PURPOSE), AND WHETHER ARISING UNDER COURSE OF PERFORMANCE, COURSE OF DEALING OR TRADE USAGE.

This Warranty is exclusive and limited to repair or, at the discretion of Banner Engineering Corp., replacement. **IN NO EVENT SHALL BANNER ENGINEERING CORP. BE LIABLE TO BUYER OR ANY OTHER PERSON OR ENTITY FOR ANY EXTRA COSTS, EXPENSES, LOSSES, LOSS OF PROFITS, OR ANY INCIDENTAL, CONSEQUENTIAL OR SPECIAL DAMAGES RESULTING FROM ANY PRODUCT DEFECT OR FROM THE USE OR INABILITY TO USE THE PRODUCT, WHETHER ARISING IN CONTRACT OR WARRANTY, STATUTE, TORT, STRICT LIABILITY, NEGLIGENCE, OR OTHERWISE.**

Banner Engineering Corp. reserves the right to change, modify or improve the design of the product without assuming any obligations or liabilities relating to any product previously manufactured by Banner Engineering Corp. Any misuse, abuse, or improper application or installation of this product or use of the product for personal protection applications when the product is identified as not intended for such purposes will void the product warranty. Any modifications to this product without prior express approval by Banner Engineering Corp will void the product warranties. All specifications published in this document are subject to change; Banner reserves the right to modify product specifications or update documentation at any time. Specifications and product information in English supersede that which is provided in any other language. For the most recent version of any documentation, refer to: www.bannerengineering.com.

For patent information, see www.bannerengineering.com/patents.

© Banner Engineering Corp. All rights reserved.
www.bannerengineering.com

LinkedIn

X

Facebook

Instagram



© 2026. All rights reserved.
www.bannerengineering.com