SMBPVA9 Mounting Bracket Kit

Used for Mounting Parts Verification Array Sensors



Shown with sensor and bracket model SMBPVD100A

Features

- Pair of 2-piece swivel brackets
- Mount directly to sensor or to SMBPVD100(225) protective brackets
- Designed for mounting sensor to “look down” or at an angle ±90°

Dimensions

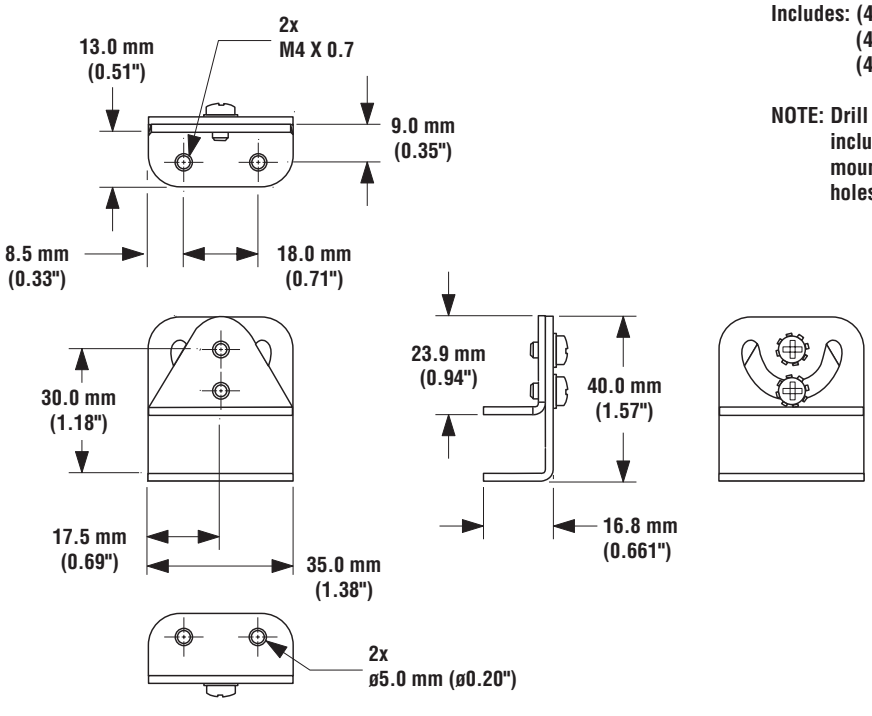

Includes: (4) Self-threading machine screws
(4) M4 Lock washers
(4) M4 Screws

NOTE: Drill 3.7 mm (0.146") holes for mounting with included self-tapping screws. Use the sensor mounting holes as a template for drilling the holes.

Banner Engineering Corp., 9714 Tenth Ave. No., Minneapolis, MN USA 55441 • Phone: 763.544.3164 • www.bannerengineering.com • Email: sensors@bannerengineering.com

Printed in USA 05/03 P/N 114018

ПРОМЭЛЕКТРОНИКА/ sales@prom-elec.com