VS3 Retroreflective Mode Sensors

Features

- Extremely compact, self-contained miniature sensor
- Coaxial optics eliminate blind area at close range
- Visible red sensing beam (both polarized and non-polarized versions)
- Included retroreflective target with 0 mm to 250 mm range (0 in to 10 in)
- 10 V DC to 30 V DC operation
- Choice of integral cable or quick-disconnect
- Three-wire connection; output load capacity to 50 mA
- Models are available with either NPN or PNP output
- Choose dark or light operate models



WARNING:

- **Do not use this device for personnel protection**
- Using this device for personnel protection could result in serious injury or death.
- This device does not include the self-checking redundant circuitry necessary to allow its use in personnel safety applications. A device failure or malfunction can cause either an energized (on) or de-energized (off) output condition.

User Application Notes:

- The VS3...XLP series should be used for general sensing applications such as packages, small parts, mirror-like surfaces, or documents. They are most effective when used with the supplied micro-prism reflector.
- When using glass bead tape (for example, 3M model 6870), non-polarized models (VS3...XLV) must be used. These models should also be considered when a glass lens (that is, VS3..XLP) is not permitted in the sensing environment.
- For non-polarized sensors, an object's surface reflection (for example, polished stainless steel) may be more reflective than low-grade retroreflective tape, and a bright object transition may not be detected by the non-polarized sensor.

Models

Non-Polarized Models

Models	Connection	Sensing Beam/Range	Output Type	Supply Voltage
VS3AN5XLV	2 m (6.5 ft) integral PVC-jacketed cable	Visible red, 680 nm 250 mm (10 in) using included BRT32X20AM retroreflective target	NPN/Light Operate	10 V DC to 30 V DC
VS3RN5XLV			NPN/Dark Operate	
VS3AP5XLV			PNP/Light Operate	
VS3AN5XLVQ	Integral 3-pin M8 male quick-disconnect connector		NPN/Light Operate	
VS3AP5XLVQ			PNP/Light Operate	
VS3RP5XLVQ			PNP/Dark Operate	

Polarized Models

Models	Connection	Sensing Beam/Range	Output Type	Supply Voltage
VS3AN5XLP	2 m (6.5 ft) integral PVC-jacketed cable	Visible red, 680 nm 250 mm (10 in) using included BRT32X20AM retroreflective target	NPN/Light Operate	10 V DC to 30 V DC
VS3RN5XLP			NPN/Dark Operate	
VS3AP5XLP			PNP/Light Operate	
VS3RP5XLP			PNP/Dark Operate	
VS3AN5XLPQ	Integral 3-pin M8 male quick-disconnect connector		NPN/Light Operate	
VS3RN5XLPQ			NPN/Dark Operate	
VS3AP5XLPQ			PNP/Light Operate	
VS3RP5XLPQ			PNP/Dark Operate	

In light operate (LO) mode, the output is ON when the target returns the same or more light to the sensor and OFF when the sensor detects less light than the configured/taught target. In dark operate (DO) mode, the output is ON when the target returns less light to the sensor than the configured target and OFF when the sensor detects more light than the configured/taught target. In **retroreflective** sensing modes, light operate means the output is on when the beam is unblocked and dark operate means the output is on when the beam is blocked.

Original Instructions
26-Aug-26

© Banner Engineering Corp. All rights reserved.
www.bannerengineering.com

63226
p/n: 63226 Rev. C

ПРОМЭЛЕКТРОНИКА/ sales@prom-elec.com

The following models are no longer available for order but are still covered by the information in this document.

- VS3RP5XLV: cabled model with PNP/Dark Operate
- VS3RN5XLVQ: model with a quick-disconnect connector and NPN/Dark Operate

Overview

VS3 Retroreflective Mode Sensors are miniature, self-contained sensors, designed for retroreflective sensing in small areas previously accessible only to remote or fiberoptic models. Typical applications include mounting on small feeder tracks, packaging machines, and conveyors, where larger sensors do not fit.

The coaxial optics of the VS3 allow the retroreflective target to be placed as close to the sensor lens as needed. There is no blind response area, as is typical of most retroreflective sensors. The VS3 is supplied with a Banner model BRT32X20AM retroreflective target (see "Retroreflective Target" on page 4). The "Specifications" on page 2 assume use of this target.

Other retroreflective materials may be substituted. For example, using the standard BRT-3 target changes the range to 400 mm (16 in), while using the standard BRT-THG retroreflective tape changes the range to 150 mm (6 in). Contact Banner Engineering for sensing performance when using other retroreflective targets.

Wiring

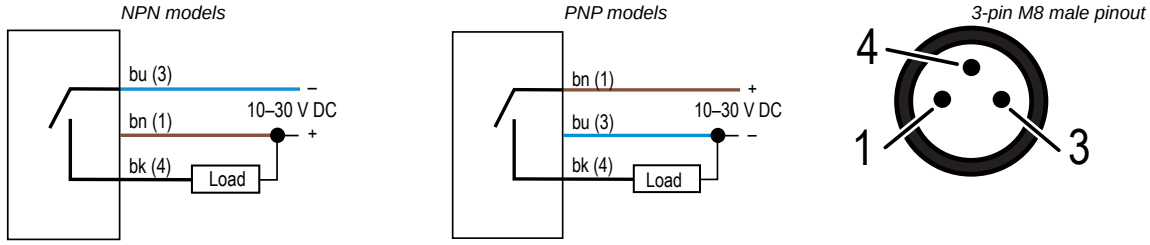

Specifications

Supply Voltage and Current

10 V DC to 30 V DC (10% maximum ripple) at less than 25 mA (exclusive of load)

Supply Protection Circuitry

Protected against reverse polarity and transient voltages

Output Configuration

SPST solid-state switch

Choose NPN (current sinking) or PNP (current sourcing) models

Choose light operate (N.O.) or dark operate (N.C.) models

Output Rating

50 mA maximum

Off-state leakage current: < 1 microamp at 24 V DC

On-state saturation voltage: < 0.25 V at 10 mA DC; < 0.5 V at 50 mA DC

Output Protection Circuitry

Protected against output short-circuit, continuous overload, and false pulse on power-up

Overload trip point ≥ 100 mA

Output Response Time

1 millisecond ON and 0.5 milliseconds OFF

100 millisecond delay on power-up: output is non-conducting during this time

Repeatability

160 microseconds

Certifications

CE

Indicators

Two LEDs: Green and Amber

Green ON = power to sensor is ON

Green flashing = output overload

Amber ON = light is sensed

Construction

VS3..XLV models: Black ABS housing with acrylic lens

VS3..XLP models: Black ABS housing with glass lens and acrylic cover

Environmental Rating

IP67, NEMA 6

Connections

2 m (6.5 ft) integral PVC-jacketed cable: three #28 ga stranded conductors with PE insulation; or integral 3-pin M8 male quick-disconnect connector. Quick-disconnect cables are ordered separately.

Operating Conditions

–20 °C to +55 °C (–4 °F to +131°F)

80% at +50 °C maximum relative humidity (non-condensing)

Vibration and Mechanical Shock

Vibration: All models meet IEC 60068-2-6, IEC 60947-5-2, UL491 Section 40, MIL-STD-202F, Method 201A (Vibration: 10 Hz to 60 Hz, 0.5 mm peak-to-peak)

Shock: All models meet IEC 60068-2-27, IEC 60947-5-2 (Shock: 30G peak acceleration, 11 ms pulse duration, half sine wave pulse shape)

Application Notes

M3 stainless steel mounting hardware included. Optional mounting brackets are available

© Banner Engineering Corp. All rights reserved.
www.bannerengineering.com

Dimensions

All measurements are listed in millimeters [inches], unless noted otherwise. The measurements provided are subject to change.

VS3...XLV model dimensions are shown. VS3...XLP dimensions are functionally identical.

Cabled Model **Quick-Disconnect Model**

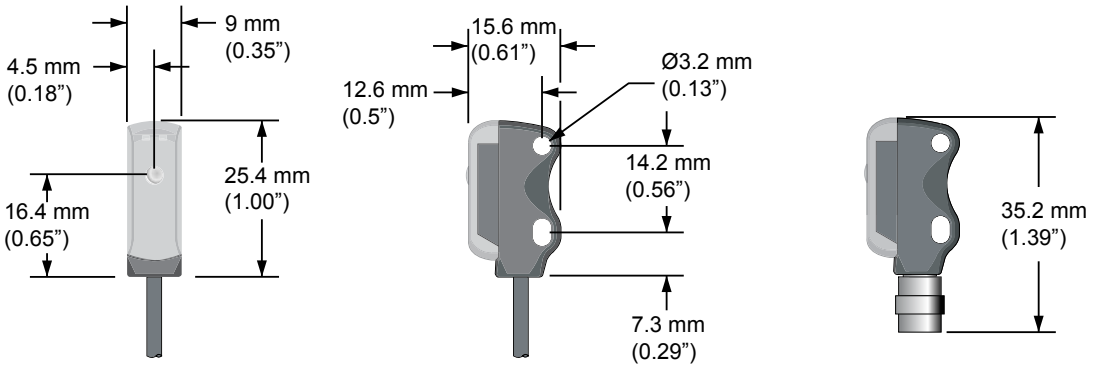

Performance Curves

Excess gain

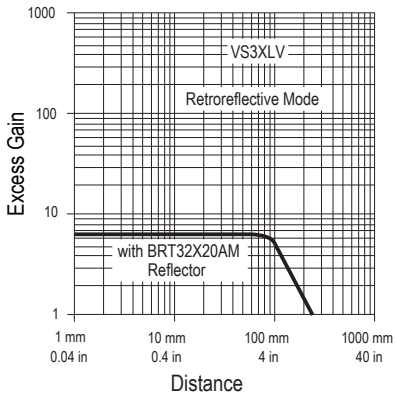

Beam pattern

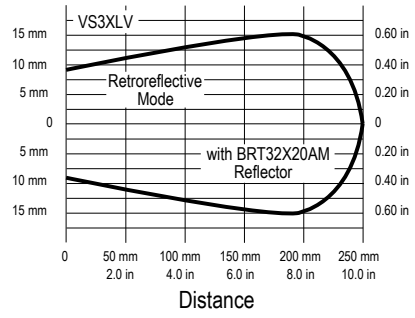

Excess gain

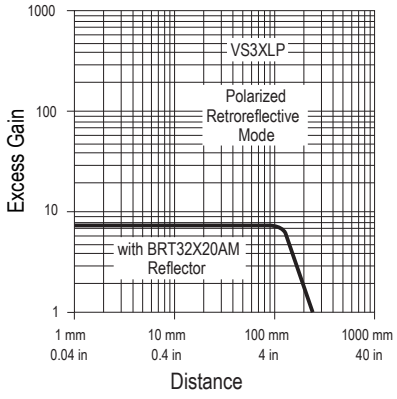

Beam pattern

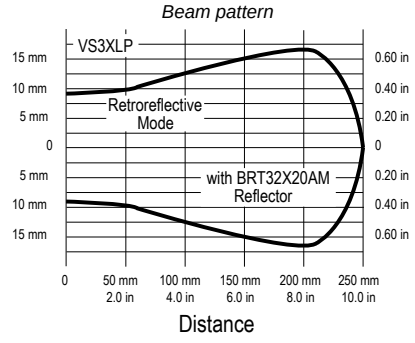

© Banner Engineering Corp. All rights reserved.
www.bannerengineering.com

Accessories

Cordsets

3-Pin Single-Ended Threaded M8 Female Cordsets				
Model	**Length**	**Style**	**Dimensions**	**Pinout (Female)**
PKG3M-2	2 m (6.56 ft)	Straight	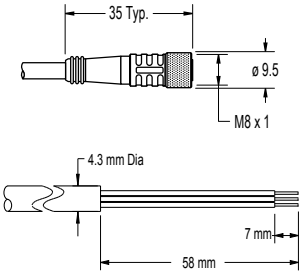	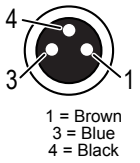 1 = Brown 3 = Blue 4 = Black
PKG3M-4	4 m (13.12 ft)			
PKG3M-5	5 m (16.4 ft)			
PKG3M-7	7 m (22.96 ft)			
PKG3M-9	9 m (29.52 ft)			
PKG3M-10	10 m (32.81 ft)			
PKW3M-2	2 m (6.56 ft)	Right-Angle	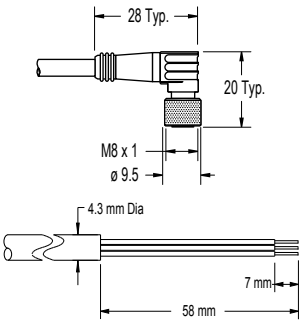	
PKW3M-5	5 m (16.40 ft)			
PKW3M-9	9 m (29.53 ft)			

Retroreflective Target

BRT-32X20AM

- Rectangular, thin-profile acrylic target
- Reflectivity Factor: 1.2
- Temperature: –20 °C to +60 °C (–4 °F to +140 °F)
- Micro-prism geometry
- Reflector size: 20 mm × 20 mm
- Approximate size: 20 mm × 32 mm × 3 mm
- Two 3.5 mm diameter mounting holes, 26 mm centers
- CAD Files: DXF, PDF, IGS, STP



Brackets

SMBVS3S

- Right-angle bracket
- 300 stainless steel
- CAD Files: DXF, PDF, IGS, STP

Hole center spacing: A = 13.5
Hole size: A = 3.2 x 7.7

SMBVS3T

- Tall right-angle bracket
- 300 stainless steel
- CAD Files: DXF, PDF, IGS, STP

Hole center spacing: A = 13.5
Hole size: A = 3.2 x 7.7

© Banner Engineering Corp. All rights reserved.
www.bannerengineering.com

Banner Engineering Corp Limited Warranty

Banner Engineering Corp. warrants its products to be free from defects in material and workmanship for one year following the date of shipment. Banner Engineering Corp. will repair or replace, free of charge, any product of its manufacture which, at the time it is returned to the factory, is found to have been defective during the warranty period. This warranty does not cover damage or liability for misuse, abuse, or the improper application or installation of the Banner product.

THIS LIMITED WARRANTY IS EXCLUSIVE AND IN LIEU OF ALL OTHER WARRANTIES WHETHER EXPRESS OR IMPLIED (INCLUDING, WITHOUT LIMITATION, ANY WARRANTY OF MERCHANTABILITY OR FITNESS FOR A PARTICULAR PURPOSE), AND WHETHER ARISING UNDER COURSE OF PERFORMANCE, COURSE OF DEALING OR TRADE USAGE.

This Warranty is exclusive and limited to repair or, at the discretion of Banner Engineering Corp., replacement. **IN NO EVENT SHALL BANNER ENGINEERING CORP. BE LIABLE TO BUYER OR ANY OTHER PERSON OR ENTITY FOR ANY EXTRA COSTS, EXPENSES, LOSSES, LOSS OF PROFITS, OR ANY INCIDENTAL, CONSEQUENTIAL OR SPECIAL DAMAGES RESULTING FROM ANY PRODUCT DEFECT OR FROM THE USE OR INABILITY TO USE THE PRODUCT, WHETHER ARISING IN CONTRACT OR WARRANTY, STATUTE, TORT, STRICT LIABILITY, NEGLIGENCE, OR OTHERWISE.**

Banner Engineering Corp. reserves the right to change, modify or improve the design of the product without assuming any obligations or liabilities relating to any product previously manufactured by Banner Engineering Corp. Any misuse, abuse, or improper application or installation of this product or use of the product for personal protection applications when the product is identified as not intended for such purposes will void the product warranty. Any modifications to this product without prior express approval by Banner Engineering Corp will void the product warranties. All specifications published in this document are subject to change; Banner reserves the right to modify product specifications or update documentation at any time. Specifications and product information in English supersede that which is provided in any other language. For the most recent version of any documentation, refer to: www.bannerengineering.com.

For patent information, see www.bannerengineering.com/patents.

© Banner Engineering Corp. All rights reserved.
www.bannerengineering.com