Q5X Laser Triangulation Sensor with Dual Mode and IO-Link for Jam Detection Product Manual

Original Instructions
p/n: 218902 Rev. H
30-Apr-26
© Banner Engineering Corp. All rights reserved. www.bannerengineering.com

ПРОМЭЛЕКТРОНИКА/ sales@prom-elec.com

Contents

Chapter 1 Product Description 4
Models 4
Overview 4
Features 5
Display and Indicators 5
Buttons 5

Chapter 2 Specifications 7
Class 2 Laser Description and Safety Information 9
FCC Part 15 Class A for Unintentional Radiators 10
Industry Canada ICES-003(A) 10
Dimensions 10
Performance Curves 11

Chapter 3 Installation 12
Sensor Orientation 12
Mount the Device 13
Wiring Diagram 13
Connecting to RSD1 14
Button Map from RSD1 to Sensor 15

Chapter 4 Sensor Programming 16
Channel 1 and Channel 2 (CH1/CH2) 16
Setup Mode 16
Output (out1 and out2) 19
TEACH Mode (tch1 and tch2) 19
Time Selection (tnE1 and tnE2) 19
Adaptive Tracking (trc1 and trc1) 20
Window Size (und1 and und2) 20
Background Suppression (bGS1 and bGS2) 21
Response Speed (SPd) 21
Output Timing Delays (dLY) 21
Zero Reference Location (ZEro) 22
Shift the Zero Reference Location after a TEACH (ShFt) 22
Offset (oFS1 and oFS2) 23
Display View (diSP) 24
Units (un1t) 24
Output Type Polarity (PoL) 24
Exit Setup Mode (End) 24
Reset to Factory Defaults (rSEt) 24
Manual Adjustments 24
Remote Input 25
Select the TEACH Mode Using the Remote Input 26
Reset to Factory Defaults Using the Remote Input 26
Locking and Unlocking the Sensor Buttons 27
Button Instructions 27
Remote Input Instructions 27
TEACH Procedures 27
Two-Point Static Background Suppression (2-Pt) 28
Dynamic Background Suppression (dYn) 29
One-Point Window (Foreground Suppression) (FGS) 30
One-Point Background Suppression (bGS) 32
Dual (Intensity + Distance) (duAL) 33
Jam Retroreflective (JrEt) 34
Jam Background Suppression (JbGS) 36
Pulse Frequency Modulation (PFM) Output (PULS) 37
Sync Master/Slave 37

Chapter 5 IO-Link Interface 38

Chapter 6 Additional Information 39
Dual (Intensity + Distance) Mode 39
Dual Mode Reference Surface Considerations 39
Dual Mode Considerations for Clear and Transparent Object Detection 40

© Banner Engineering Corp. All rights reserved. www.bannerengineering.com

Abbreviations 41

Chapter 7 Accessories 44
Cordsets 44
Brackets 45
Reference Targets 46
RSD1 Remote Display 46

Chapter 8 Product Support and Maintenance 47
Troubleshooting 47
Clean Sensor with Compressed Air and Water 47
Repairs 47
Contact Us 47
Banner Engineering Corp Limited Warranty 48

© Banner Engineering Corp. All rights reserved. www.bannerengineering.com

Chapter Contents

Models 4
Overview 4
Features 5

Chapter 1 Product Description

Class 2 laser CMOS sensor with dual outputs and IO-Link. Patent pending.



- Laser triangulation sensor with enhanced Dual Mode algorithm optimized for Jam Detection
- Range from 95 mm to 2000 mm (9.5 cm to 200 cm)
- Bright output indicators and real-time distance feedback provide easy set up and troubleshooting for reduced installation costs
- Exceptionally high excess gain enables the sensor to reliably detect the darkest objects (< 6% reflective black targets), including black targets against a black background, black targets against a shiny metal background, clear and reflective objects, multicolor packaging, and targets of all colors
- Dual independent output channels and communication over IO-Link
- Optional Remote Sensor Display (RSD) (available separately) enables remote programming and monitoring

WARNING:

- **Do not use this device for personnel protection**
- Using this device for personnel protection could result in serious injury or death.
- This device does not include the self-checking redundant circuitry necessary to allow its use in personnel safety applications. A device failure or malfunction can cause either an energized (on) or de-energized (off) output condition.

Models

Model	Sensing Range	Channel 1 Default	Channel 2 Default	Connection
Q5XKLAF2000-Q8-JAM	95 mm to 2000 mm (9.5 cm to 200 cm)	IO-Link, push/pull output User selectable to be fixed NPN or PNP	PNP output or user selectable multi-function User selectable to be fixed NPN or PNP	270° rotatable Integral 4-pin M12 male quick-disconnect connector

Overview

The Q5X Laser Triangulation Sensor with Dual Mode for Jam Detection is a Class 2 laser CMOS sensor with a multifunction input and output.

The Q5X with Jam Detection looks for a change in signal strength and distance between the face for the sensor and the packages. Because it does not rely on gaps, it detects jams faster and more accurately than conventional jam photo eyes.

From Run mode, users may change the switch point value and channel selection and perform the selected TEACH method. From Setup mode, users may select the TEACH mode, adjust all standard operating parameters, and perform a factory reset.

© Banner Engineering Corp. All rights reserved.
www.bannerengineering.com

Features

The Q5X Laser Triangulation Sensor with Dual Mode for Jam Detection has three major features.

Q5X Features



1. Two output indicators (amber)
2. Display
3. Buttons

Display and Indicators

The display is a 4-digit, 7-segment LED. Run mode is the primary view displayed.

For JRET, JBGS, 2-pt, BGS, FGS, and DYN TEACH modes, the display shows the current distance to the target in centimeters. For Dual TEACH mode, the display shows the percentage matched to the taught reference surface. A display value of 999P indicates the sensor has not been taught.

Display in Run Mode

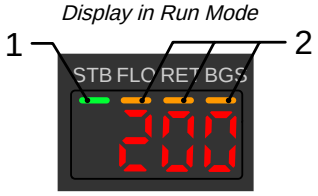

1. Stability Indicator (STB—Green)
2. Active TEACH Indicators
   - FLO—Amber
   - RET—Amber
   - BGS—Amber

Output Indicator

On—Output is on

Off—Output is off

Stability Indicator (STB)

On—Stable signal within the specified sensing range

Flashing—Marginal signal (low excess gain), the target is outside the limits of the specified sensing range, or a multiple peak condition exists

Off—No target detected within the specified sensing range

Active TEACH Indicators (FLO, RET, BGS)

RET on—Jam Retroreflective TEACH mode selected (default)

BGS on—Jam Background Suppression TEACH mode selected

RET and BGS on—Foreground suppression TEACH mode selected

BGS and FLO on—Background suppression TEACH mode selected

FLO and RET on—Dynamic TEACH mode selected

RET, FLO, and BGS all off—Two-point TEACH mode selected

RET, FLO, and BGS all on—Dual TEACH mode selected

Buttons

Use the sensor buttons **(SELECT)(TEACH)**, **(+)(CH1/CH2)**, and **(-)(MODE)** to program the sensor.

Button Layout

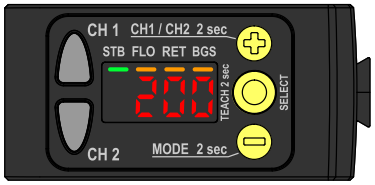

(SELECT/TEACH)

Press to select menu items in Setup mode

© Banner Engineering Corp. All rights reserved.
www.bannerengineering.com

Press and hold for longer than 2 seconds to start the currently selected TEACH mode

(+)(CH1/CH2)

Press to navigate the sensor menu in Setup mode

Press to change setting values; press and hold to increase numeric values

Press and hold for longer than 2 seconds to switch between Channel 1 and Channel 2

(-)(MODE)

Press to navigate the sensor menu in Setup mode

Press to change setting values; press and hold to decrease numeric values

Press and hold for longer than 2 seconds to enter Setup mode

NOTE: When navigating the menu, the menu items loop.

© Banner Engineering Corp. All rights reserved.

Chapter Contents

Class 2 Laser Description and Safety Information 9
FCC Part 15 Class A for Unintentional Radiators 10
Industry Canada ICES-003(A) 10
Dimensions 10
Performance Curves 11

Chapter 2 Specifications

Sensing Beam

Visible red, Class 2 laser (see "Class 2 Laser Description and Safety Information" on page 9)

Supply Voltage (Vcc)

10 V DC to 30 V DC (Class 2 supply) (10% max ripple within limits)

Power and Current Consumption, exclusive of load

< 1 W

Sensing Range

95 mm to 2000 mm (3.74 in to 78.74 in)

Output Configuration

Channel 1: Push/pull output, configurable PNP or NPN output

Channel 2: Multi-function remote input/output, configurable PNP or NPN, or pulse frequency modulated output

Output Rating

Current rating: 50 mA maximum

Black wire specifications per configuration		
Push/Pull	Output High:	≥ Vsupply - 2.5 V
	Output Low:	≤ 2.5 V
PNP	Output High:	≥ Vsupply - 2.5 V
	Output Low:	≤ 1V (loads ≤ 1 MegΩ)
NPN	Output High:	≥ Vsupply - 2.5 V (loads ≤ 50 kΩ)
	Output Low:	≤ 2.5 V

White wire specifications per configuration		
PNP	Output High:	≥ Vsupply - 2.5 V
	Output Low:	≤ 2.5 V (loads ≤ 70 kΩ)
NPN	Output High:	≥ Vsupply - 2.5 V (loads ≤ 70 kΩ)
	Output Low:	≤ 2.5 V

Beam Spot Size

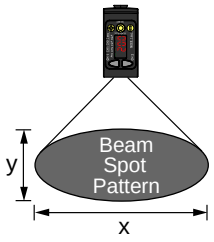

Distance (mm)	Size (x × y) (mm)
100	2.6 × 1.5
1000	4.2 × 2.5
2000	6 × 3.6

Beam spot size is calculated as 1.6 times the D4σ measured value

Required Overcurrent Protection

WARNING: Electrical connections must be made by qualified personnel in accordance with local and national electrical codes and regulations.

Overcurrent protection is required to be provided by end product application per the supplied table.

Overcurrent protection may be provided with external fusing or via Current Limiting, Class 2 Power Supply.

Supply wiring leads < 24 AWG shall not be spliced.

For additional product support, go to www.bannerengineering.com.

Supply Wiring (AWG)	Required Overcurrent Protection (A)	Supply Wiring (AWG)	Required Overcurrent Protection (A)
20	5.0	26	1.0
22	3.0	28	0.8
24	2.0	30	0.5

Boresighting

± 43 mm at 2000 mm

Response Speed

User selectable: 15, 25, or 50 ms

Delay at Power Up

< 2.5 s

© Banner Engineering Corp. All rights reserved.
www.bannerengineering.com

Maximum Torque
Side mounting: 1 N·m (9 in·lbs)

Ambient Light Immunity
Up to 5000 lux at 1000 mm
Up to 2000 lux at 2000 mm

Connector
Integral 4-pin M12 male quick-disconnect connector

Construction
Housing: ABS
Lens cover: PMMA acrylic
Lightpipe and display window: polycarbonate

Temperature Effect (Typical)
< 0.5 mm/°C at < 500 mm
< 1.0 mm/°C at < 1000 mm
< 2.0 mm/°C at < 2000 mm

Discrete Output Distance Repeatability

Distance (mm)	Repeatability
95 to 300	± 0.5 mm
300 to 1000	± 0.25%
1000 to 2000	± 0.5%

Supply Protection Circuitry
Protected against reverse polarity and transient overvoltages

Remote Input
Allowable Input Voltage Range: 0 to Vsupply
Active High (internal weak pull-down): High state > (Vsupply – 2.25 V) at 2 mA maximum
Active Low (internal weak pull-up): Low state < 2.25 V at 2 mA maximum

IO-Link Interface
IO Link Revision V1.1
Supports Smart Sensor Profile: Yes
Baud Rate: 38400 bps
Process Data In Length: 32 bits
Process Data Out Length: 8 bits
Minimum Cycle Time: 3.6 ms
IODD files: Provides all programming options of the display, plus additional functionality.

Application Note
For optimum performance, allow 10 minutes for the sensor to warm up

Environmental Rating
IP67 per IEC60529

Vibration
MIL-STD-202G, Method 201A (Vibration: 10 Hz to 55 Hz, 0.06 inch (1.52 mm) double amplitude, 2 hours each along X, Y and Z axes), with device operating

Shock
MIL-STD-202G, Method 213B, Condition I (100G 6x along X, Y, and Z axes, 18 shocks), with device operating

Operating Conditions
–10 °C to +50 °C (+14 °F to +122 °F)
35% to 95% relative humidity

Storage Temperature
–25 °C to +70 °C (–13 °F to +158 °F)

Certifications

Banner Engineering BV
Park Lane, Culliganlaan 2F bus 3
1831 Diegem, BELGIUM

Turck Banner LTD Blenheim House
Blenheim Court
Wickford, Essex SS11 8YT
GREAT BRITAIN

Industrial Control Equipment 3TJJ

Class 2 power

UL Environmental Rating: Type 1

Advanced Capabilities

Excess Gain

	Excess Gain Using a 90% White Card [1]			
Response Speed (ms)	at 100 mm	at 500 mm	at 1000 mm	at 2000 mm
15	725 (225)	250 (75)	70 (25)	15 (6)
25	1250 (800)	450 (250)	125 (70)	30 (15)
50	2500 (1250)	900 (450)	250 (125)	60 (30)

[1] Standard excess gain available in 15, 25, and 50 ms response speeds; standard excess gain provides increase noise immunity.

© Banner Engineering Corp. All rights reserved.
www.bannerengineering.com

Class 2 Laser Description and Safety Information



Laser light. Do not stare into the beam.

Complies with 21 CFR 1040.10 and 1040.11 except for deviations pursuant to Laser Notice No. 56, dated May 8, 2019.

CLASS 2
LASER PRODUCT

CAUTION:

- **Never stare directly into the sensor lens.**
- Laser light can damage your eyes.
- Avoid placing any mirror-like object in the beam. Never use a mirror as a retroreflective target.

CAUTION:

- **Return defective units to the manufacturer.**
- Use of controls or adjustments or performance of procedures other than those specified herein may result in hazardous radiation exposure.
- Do not attempt to disassemble this sensor for repair. A defective unit must be returned to the manufacturer.

CAUTION:

- **Ne regardez jamais directement la lentille du capteur.**
- La lumière laser peut endommager la vision.
- Évitez de placer un objet réfléchissant (de type miroir) dans la trajectoire du faisceau. N'utilisez jamais de miroir comme cible rétro-réfléchissante.

CAUTION:

- **Tout dispositif défectueux doit être renvoyé au fabricant.**
- L'utilisation de commandes, de réglages ou de procédures autres que celles décrites dans le présent document peut entraîner une exposition dangereuse aux radiations.
- N'essayez pas de démonter ce capteur pour le réparer. Tout dispositif défectueux doit être renvoyé au fabricant.

Class 2 lasers are lasers that emit visible radiation in the wavelength range from 400 nm to 700 nm, where eye protection is normally afforded by aversion responses, including the blink reflex. This reaction may be expected to provide adequate protection under reasonably foreseeable conditions of operation, including the use of optical instruments for intrabeam viewing.

Complies with IEC 60825-1:2014 and EN 60825-1:2014+A11:2021.

Class 2 Laser Safety Notes. Low-power lasers are, by definition, incapable of causing eye injury within the duration of a blink (aversion response) of 0.25 seconds. They also must emit only visible wavelengths (400 nm to 700 nm). Therefore, an ocular hazard may exist only if individuals overcome their natural aversion to bright light and stare directly into the laser beam.

For safe laser use:

- Do not stare at the laser.
- Do not point the laser at a person’s eye.
- Mount open laser beam paths either above or below eye level, where practical.
- Terminate the beam emitted by the laser product at the end of its useful path.

IMPORTANT: This laser device is not bore-sighted.

© Banner Engineering Corp. All rights reserved.
www.bannerengineering.com

Class 2 Laser Characteristics

Output power: < 1.0 mW
Laser wavelength: 650 nm
Pulse duration: 20 µs to 2 ms

FCC Part 15 Class A for Unintentional Radiators

This equipment has been tested and found to comply with the limits for a Class A digital device, pursuant to Part 15 of the FCC Rules. These limits are designed to provide reasonable protection against harmful interference when the equipment is operated in a commercial environment. This equipment generates, uses, and can radiate radio frequency energy and, if not installed and used in accordance with the instruction manual, may cause harmful interference to radio communications. Operation of this equipment in a residential area is likely to cause harmful interference in which case the user will be required to correct the interference at his own expense.

(Part 15.21) Any changes or modifications not expressly approved by the party responsible for compliance could void the user's authority to operate this equipment.

Industry Canada ICES-003(A)

This device complies with CAN ICES-3 (A)/NMB-3(A). Operation is subject to the following two conditions: 1) This device may not cause harmful interference; and 2) This device must accept any interference received, including interference that may cause undesired operation.

Cet appareil est conforme à la norme NMB-3(A). Le fonctionnement est soumis aux deux conditions suivantes : (1) ce dispositif ne peut pas occasionner d'interférences, et (2) il doit tolérer toute interférence, y compris celles susceptibles de provoquer un fonctionnement non souhaité du dispositif.

Dimensions

All measurements are listed in millimeters [inches], unless noted otherwise. The measurements provided are subject to change.

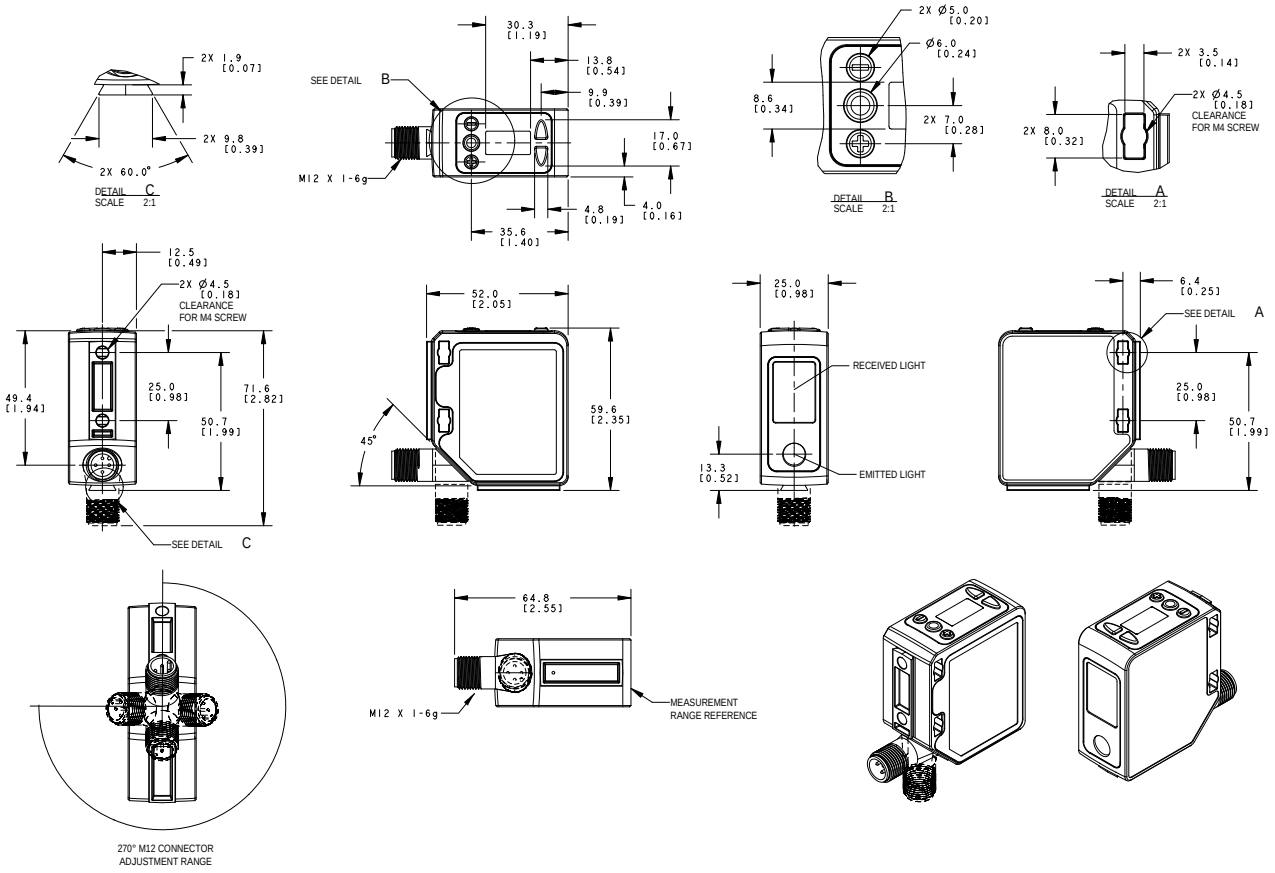

© Banner Engineering Corp. All rights reserved.
www.bannerengineering.com

Performance Curves

Minimum Object Separation Distance (90% to 6% reflectance)

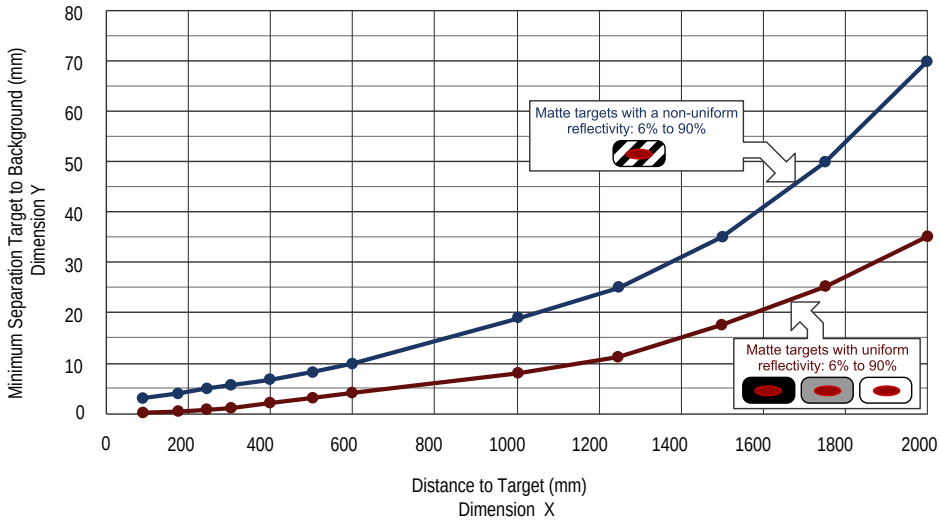

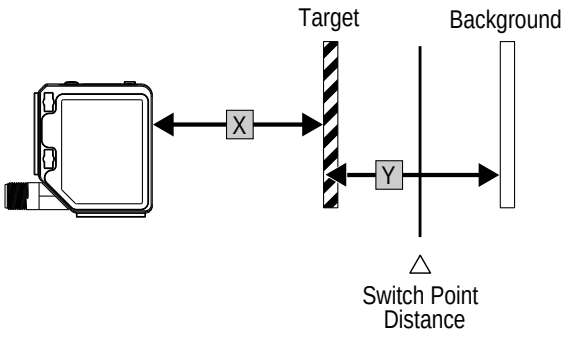

© Banner Engineering Corp. All rights reserved.
www.bannerengineering.com

Chapter Contents

Sensor Orientation 12
Mount the Device 13
Wiring Diagram 13
Connecting to RSD1 14
Button Map from RSD1 to Sensor 15

Chapter 3 Installation

Sensor Orientation

Optimize detection reliability and minimum object separation performance with correct sensor-to-target orientation. To ensure reliable detection, orient the sensor as shown in relation to the target to be detected.

Optimal Orientation of Target to Sensor

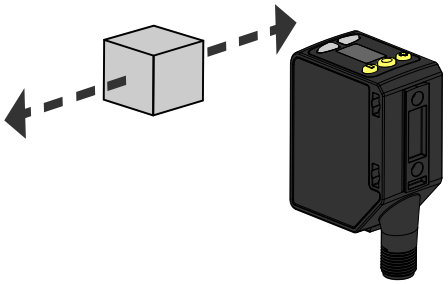

See the following figures for examples of correct and incorrect sensor-to-target orientation as certain placements may pose problems for sensing some targets. The Q5X can be used in the less preferred orientation and at steep angles of incidence and still provide reliable detection performance due to its high excess gain. For the minimum object separation distance required for each case, refer to "Performance Curves" on page 11.

Orientation by a wall

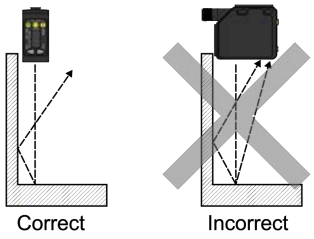

Orientation for a moving object

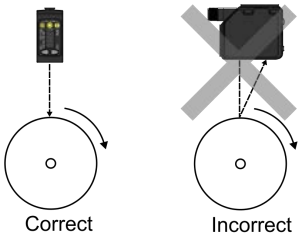

Orientation for a height difference

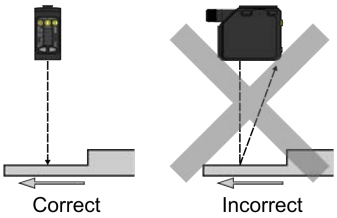

Orientation for a color or luster difference

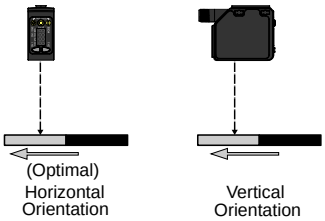

Orientation for highly reflective target[2]

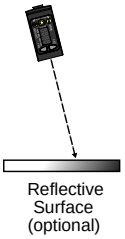

[2] *Applying tilt to sensor may improve performance on reflective targets. The direction and magnitude of the tilt depends on the application, but a 15° tilt is often sufficient.*

© Banner Engineering Corp. All rights reserved.
www.bannerengineering.com

Mount the Device

1. If a bracket is needed, mount the device onto the bracket.
2. Mount the device (or the device and the bracket) to the machine or equipment at the desired location. Do not tighten the mounting screws at this time.
3. Check the device alignment.
4. Tighten the mounting screws to secure the device (or the device and the bracket) in the aligned position.

Wiring Diagram

Channel 2 as PNP Discrete or PFM Output

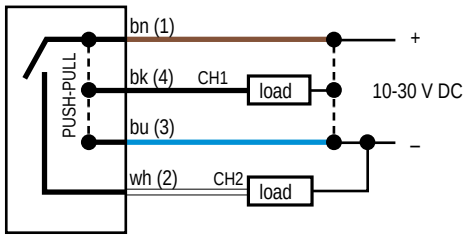

Channel 2 as Remote Input

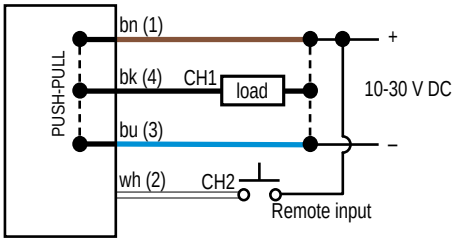

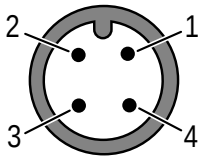

NOTE: Open lead wires must be connected to a terminal block.

NOTE: The Channel 2 wire function and polarity is user-selectable. The default for the wire is PNP output.

Channel 1 = NPN Output, Channel 2 = NPN Output

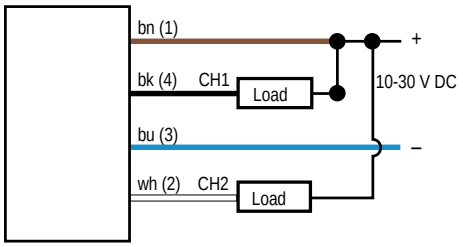

Channel 1 = PNP Output, Channel 2 = PNP Output

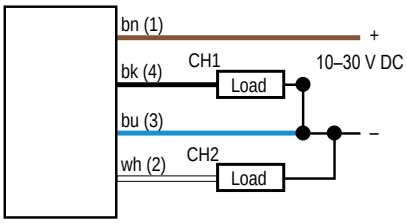

Channel 1 = NPN Output, Channel 2 = NPN Remote Input

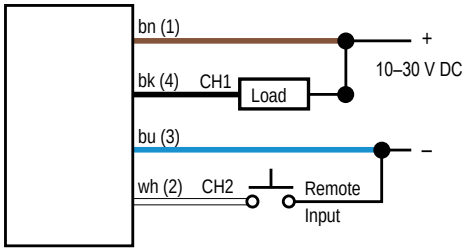

Channel 1 = PNP Output, Channel 2 = PNP Remote Input

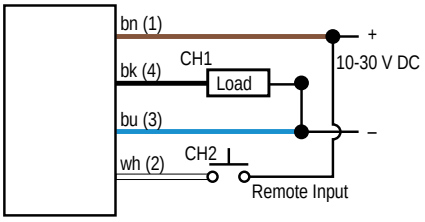

© Banner Engineering Corp. All rights reserved.
www.bannerengineering.com

Connecting to RSD1

The following diagram depicts the connection of the Q5X to the optional RSD1 accessory.

Q5X to RSD1

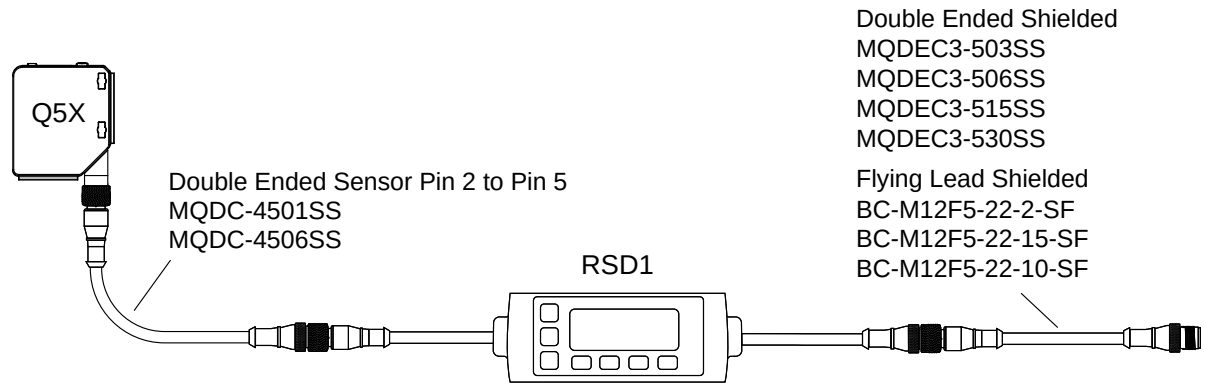

Use these cordsets to connect the RSD1 to the Q5X sensor.

Double-Ended 4-Pin M12 Female to 5-Pin M12 Male Cordsets				
Model	**Length "L1"**	**Style**	**Pinout**	
MQDC-4501SS	0.30 m (0.98 ft)	Female Straight / Male Straight	Male 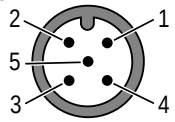	1 = Brown 2 = Not Used 3 = Blue 4 = Black 5 = White
MQDC-4506SS	1.83 m (6.00 ft)			
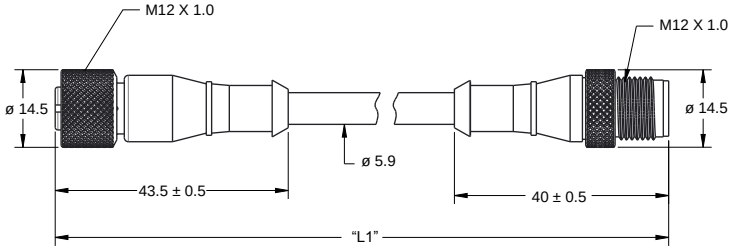			Female 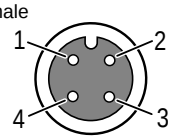	1 = Brown 2 = White 3 = Blue 4 = Black

Use these cordsets to connect the RSD1 to any PLC or IO block.

5-Pin Double-Ended M12 Female to M12 Male Shielded Cordset				
Model	**Length "L1"**	**Style**	**Pinout (Male)**	**Pinout (Female)**
MQDEC3-503SS	0.91 m (2.99 ft)	Female Straight/Male Straight	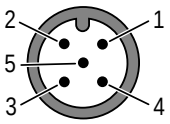	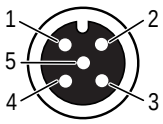
MQDEC3-506SS	1.83 m (6 ft)			
MQDEC3-515SS	4.58 m (15 ft)			
MQDEC3-530SS	9.2 m (30.2 ft)			
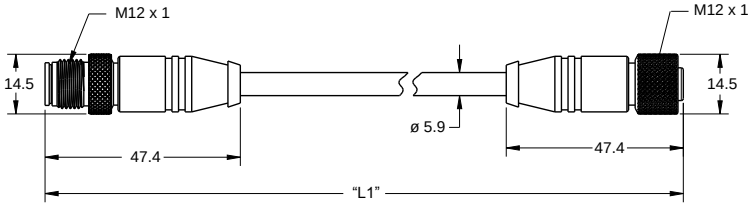			1 = Brown 2 = White 3 = Blue	4 = Black 5 = Gray

© Banner Engineering Corp. All rights reserved.
www.bannerengineering.com

5-pin Single-Ended M12 Female Shielded Cordsets (datasheet p/n 236184)				
Model	**Length**	**Dimensions (mm)**	**Pinout (Female)**	
BC-M12F5-22-1-SF	1 m (3.28 ft)	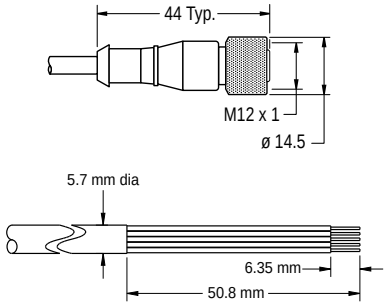	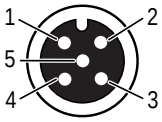	1 = Brown 2 = White 3 = Blue 4 = Black 5 = Gray
BC-M12F5-22-2-SF	2 m (6.56 ft)			
BC-M12F5-22-5-SF	5 m (16.4 ft)			
BC-M12F5-22-8-SF	8 m (26.25 ft)			
BC-M12F5-22-10-SF	10 m (30.81 ft)			
BC-M12F5-22-15-SF	15 m (49.2 ft)			

5-pin Single-Ended M12 Female Right-Angle Shielded Cordsets (datasheet p/n 236184)				
Model	**Length**	**Dimensions (mm)**	**Pinout (Female)**	
BC-M12F5A-22-1-SF	1 m (3.28 ft)	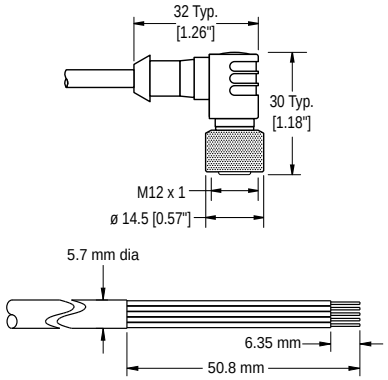	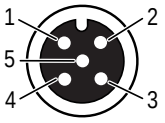	1 = Brown 2 = White 3 = Blue 4 = Black 5 = Gray
BC-M12F5A-22-2-SF	2 m (6.56 ft)			
BC-M12F5A-22-5-SF	5 m (16.4 ft)			
BC-M12F5A-22-8-SF	8 m (26.25 ft)			
BC-M12F5A-22-10-SF	10 m (30.81 ft)			
BC-M12F5A-22-15-SF	15 m (49.2 ft)			

Button Map from RSD1 to Sensor

The sensor may be optionally connected to the Banner RSD1 remote display accessory. Refer to this table for the RSD1 button association with your sensor.

Button association between the RSD1 and the Q4X/Q5X sensors

Device	Up Button	Down Button	Enter Button	Escape Button
RSD1				
Q4X and **Q5X**				N/A

© Banner Engineering Corp. All rights reserved.
www.bannerengineering.com

Chapter Contents

Channel 1 and Channel 2 (CH1/CH2) 16
Setup Mode 16
Manual Adjustments 24
Remote Input 25
Locking and Unlocking the Sensor Buttons 27
Button Instructions 27
Remote Input Instructions 27
TEACH Procedures 27
Pulse Frequency Modulation (PFM) Output (PULS) 37
Sync Master/Slave 37

Chapter 4 Sensor Programming

Program the sensor using the buttons on the sensor or the remote input (limited programming options).

In addition to programming the sensor, use the remote input to disable the buttons for security, preventing unauthorized or accidental programming changes. See "Locking and Unlocking the Sensor Buttons" on page 27 for more information.

Channel 1 and Channel 2 (CH1/CH2)

Press CH1/CH2 button to switch between Channel 1 and Channel 2.

Within each channel, there are options specific to that channel. For settings that are common to both channels, the menus are only available in Channel 1. The default is Channel 1.

To switch between Channel 1 and Channel 2:

1. Press and hold **CH1/CH2** for longer than 2 seconds. The current selection displays.
2. Press **CH1/CH2** again. The new selection flashes slowly.
3. Press **SELECT** to change the Channel and return to Run mode.

If neither **SELECT** nor **CH1/CH2** are pressed after step 2, the new selection flashes slowly for a few seconds, then flashes quickly and the sensor automatically changes the Channel and returns to Run mode.

Setup Mode

Access Setup mode and the sensor menu from Run mode by pressing and holding **MODE** for longer than 2 seconds.

Use **+** and **-** to navigate through the menu. Press **SELECT** to select a menu option and access the submenus. Use **+** and **-** to navigate through the submenus. Press **SELECT** to select a submenu option and return to the top menu, or press and hold **SELECT** for longer than 2 seconds to select a submenu option and return immediately to Run mode.

To exit Setup mode and return to Run mode, navigate to **End** and press **SELECT**.

> **NOTE:** The number that follows a menu option, for example **tch1**, indicates the channel that is selected. For menu items without a number (excluding submenu items), these menu options are only available from Channel 1 and the settings apply to both channels.

© Banner Engineering Corp. All rights reserved.
www.bannerengineering.com

Sensor Menu Map—Channel 1

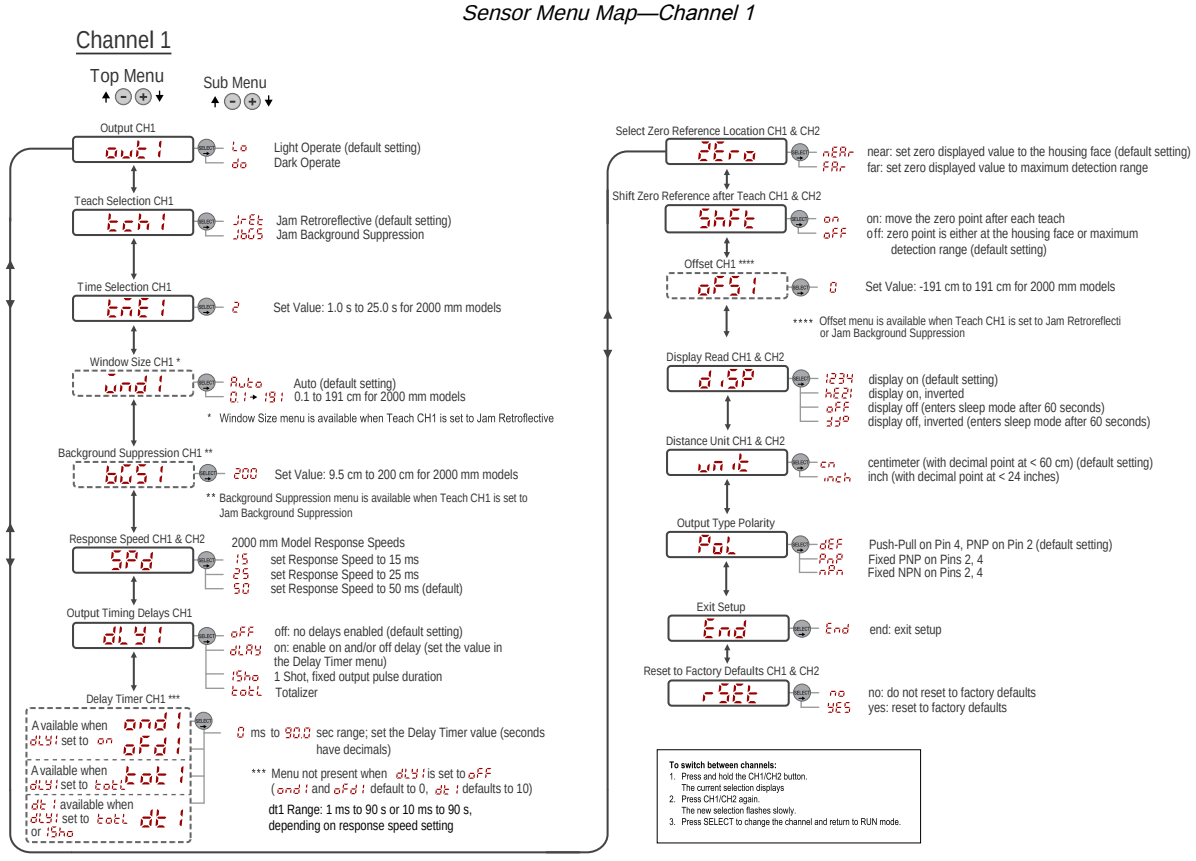

© Banner Engineering Corp. All rights reserved.
www.bannerengineering.com

Sensor Menu Map—Channel 2

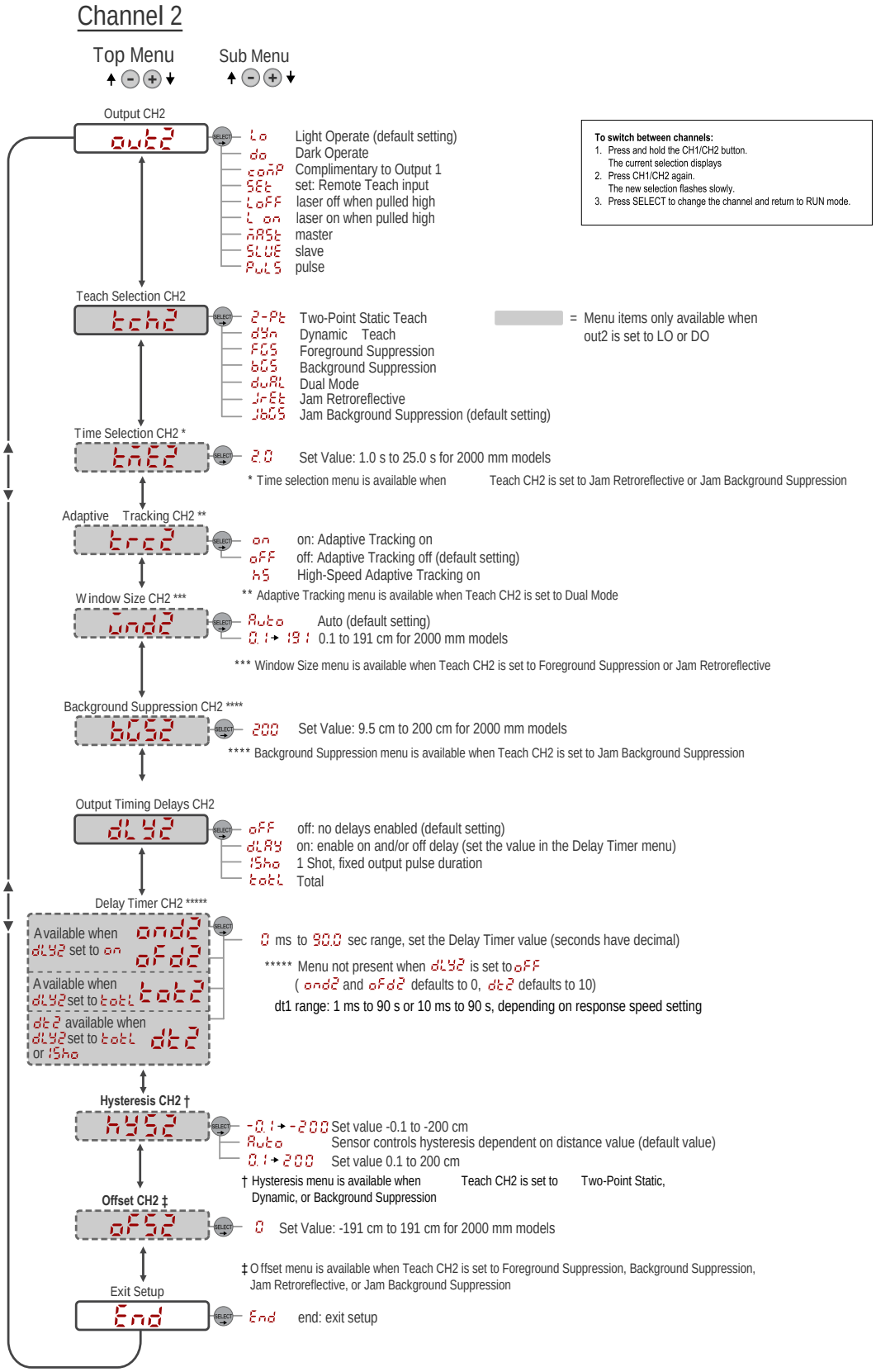

© Banner Engineering Corp. All rights reserved.
www.bannerengineering.com

Output (out1 and out2)

The Output 1 and Output 2 menus differ between Channel 1 and Channel 2.

NOTE: The number that follows **out** on the display indicates which channel is selected.

The Output 1 menu is available in Channel 1. Use this menu to select light operate (LO) or dark operate (DO). The default output configuration is light operate. To switch between light operate and dark operate, select the desired menu option.

- Lo —Light operate
- do —Dark operate

The Output 2 menu is available in Channel 2. Use this menu to set the output configuration for Channel 2. The default is light operate.

- Lo —Light operate
- do —Dark operate
- CoMP —Complementary to output 1
- SEt —Remote TEACH input
- LoFF —Laser off when pulled high
- L on —Laser on when pulled high
- MASt —Master sync line output for two-sensor cross-talk avoidance
- SLVE —Slave sync line output for two-sensor cross-talk avoidance
- PULS —Pulse Frequency Modulation (PFM) output (see "Pulse Frequency Modulation (PFM) Output (PULS)" on page 37)

To configure the sensor for master-slave operation, see "Sync Master/Slave" on page 37.

TEACH Mode (tch1 and tch2)

Use this menu to select the TEACH mode. The default is two-point TEACH. For Channel 2, this menu is available when the output is set to light operate or dark operate.

NOTE: The number that follows **tch** on the display indicates which channel is selected.

- 2-Pt —Two-point static background suppression
- dyn —Dynamic background suppression
- FGS —One-point window (foreground suppression)
- bGS —One-point background suppression
- dwAL —Dual (intensity + distance) window
- JrEt —Jam retroreflective
- JbGS —Jam background suppression

After the TEACH mode is selected, from Run mode, press and hold **TEACH** for longer than 2 seconds to start the TEACH mode and program the sensor. See "TEACH Procedures" on page 27 for additional information and remote input TEACH instructions.

Time Selection (tnE1 and tnE2)

Use this menu to set the amount of time the sensor must see a jam condition before the output changes.

Increase or decrease the time based on the speed of the conveyor and the length of the longest target. The default time is 2 seconds and is suitable for most applications. If the time needs to be increased, Banner recommends setting the Time Selection equal to the amount of time it takes two of the longest packages to pass back to back in front of the sensor.

© Banner Engineering Corp. All rights reserved.
www.bannerengineering.com

Adaptive Tracking (trc1 and trc1)

In adaptive tracking mode, the laser intensity changes to compensate for a loss in excess gain - normally caused by a dirty lens.

When operating in dual mode, the Adaptive Tracking Algorithm adjusts the switching thresholds (distance and intensity) around a taught reference surface. Adaptive tracking adjusts for small variations in the reference surface to maintain a consistent 100P (100%) on the display and to ensure reliable detection. The Adaptive Tracking menu is only available when Teach CH2 is set to Dual Mode.

Adjustment of the thresholds only occurs when the reference surface is visible to the sensor (that is, no target is present). The Adaptive Tracking Algorithm can reduce or eliminate the need to periodically re-teach the sensor as environmental conditions change around the sensor.

Enable or disable the Adaptive Tracking Algorithm from the sensor menu. The appropriate speed depends on the application. This menu is available only if dual (intensity + distance) mode is selected. For Channel 2, the output must be set to light operate or dark operate.

NOTE: The number that follows **trc** on the display indicates which channel is selected.

- HS —High-Speed Adaptive Tracking On
- on —Adaptive Tracking On
- oFF —Adaptive Tracking Off (default)

OFF disables the Adaptive Tracking Algorithm—Prevents the sensor from adjusting the thresholds around the taught reference surface while the sensor is in dual mode. The sensor will not adapt to or learn any target. Environmental changes may cause the displayed value to deviate from 100P (100%) over time. A periodic re-teach of the reference surface may be required to restore the displayed value to 100P if this is important to the application.

There are some cases in which disabling adaptive tracking is useful. For example, disable adaptive tracking if the target passes very slowly through the sensing beam, if the target might stop while partially blocking the beam, and if the environmental conditions are stable.

ON enables the Adaptive Tracking Algorithm at the standard speed—Recommended for many applications detecting low-contrast targets. Standard adaptive tracking adjusts the thresholds around slowly changing background and environmental conditions. It adjusts the sensor for stable detection when the environment changes due to gradual dust accumulation, machine vibration, or ambient temperature changes which influence the signal from the reference surface. Standard adaptive tracking will not easily adapt to or learn slow-moving, low-contrast targets (for example, clear targets entering and exiting the beam over approximately 2 seconds).

HS enables the Adaptive Tracking Algorithm at high speed—Optional adaptive tracking setting used with dual mode. Use high-speed adaptive tracking when the signal from the reference surface changes quickly due to unstable environmental conditions and high contrast and high-speed targets are being detected. High-speed adaptive tracking adjusts the sensor for stable detection in challenging environmental conditions such as dust accumulation, machine vibration, ambient temperature changes, or a non-stable reference surface (for example, a running belt or web that influences the signal from the reference surface). For example, if the signal from the reference surface changes by 10% due to environmental effects, high-speed adaptive tracking adjusts the displayed value back to 100P (100%) over 2 to 3 seconds.

High-speed adaptive tracking addresses certain applications where the reference surface is unstable, but the sensor must detect high-speed and high-contrast targets reliably. With high-speed adaptive tracking, there is the potential for the sensor to adapt the thresholds to slow-moving or low-contrast targets, leading to missed detection events. If the detection events are generating small signal changes of similar magnitude to the background changes, detection problems are likely. Stabilize the reference surface to avoid this problem.

Window Size (und1 and und2)

Use this menu to manually set a window size for subsequent TEACH operations.

This menu is available only if one-point window (foreground suppression) mode or jam retroreflective mode is selected. The default selection is Auto, where the foreground suppression (FGS) window size is automatically calculated.

This setting is automatically applied during any subsequent TEACH operation. The window size value represents a ±cm value, so the total window size is twice this value. For example, a window set of 10 cm gives a 20 cm window centered

© Banner Engineering Corp. All rights reserved.

around the taught point. The window size can also be changed directly from Run mode after changing the setting to any value except Auto. For Channel 2, the output must be set to light operate or dark operate.

Values: 0.1 cm to 191 cm

Background Suppression (bGS1 and bGS2)

Use this menu to manually set the background suppression point for the jam background suppression mode. This menu is available only if jam background suppression mode is selected. This point can also be set via the TEACH procedure. Measurements beyond this set point are qualified as not jammed.

Response Speed (SPd)

Use this menu to select the response speed.

Default: 50 milliseconds

Tradeoffs

Response Speed	Response Speed in Sync Mode	Repeatability	Ambient Light Rejection	Excess Gain
15 ms	30 ms	3 ms	Enabled	See Excess Gain in "Specifications" on page 7
25 ms	50 ms	5 ms	Enabled	
50 ms	100 ms	10 ms	Enabled	

Output Timing Delays (dLY)

Use this menu to select the output timing delay to be set.

On and off delay timers can be used together. The default is no delay.

- oFF —No delay
- dLAy —Delay—enables the selection of on and off delay timers
- 1Sho —One-shot—enables a one-shot, fixed output pulse duration

Output Timing Delays

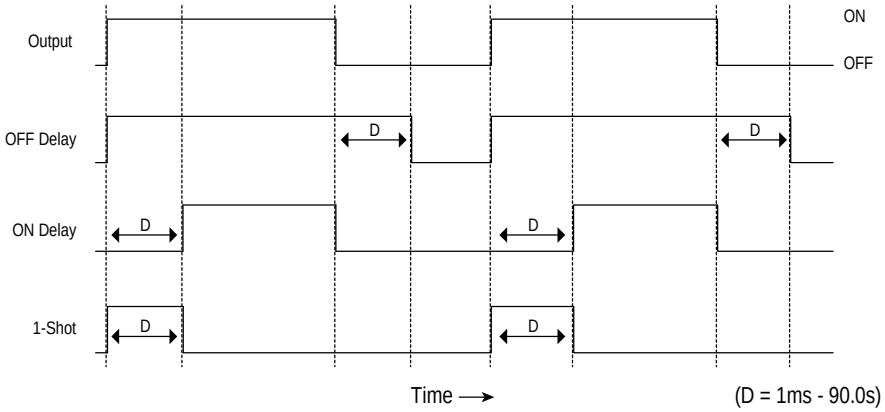

When one of the timing delay options is chosen, the sensor returns to the Setup menu and additional options become available to set the parameter(s):

dLAy

- ond —On delay
- oFd —Off delay

1Sho

- dt 1 —One-shot delay timer

© Banner Engineering Corp. All rights reserved.
www.bannerengineering.com

NOTE: For the one-shot delay timer:
- LO = On pulse when a target is detected inside of the switch point(s)
- DO = On pulse when a target is detected outside of the switch point(s)

Delay Timers (ond1, ond2, oFd1, oFd2, dt1, dt2)

Use these menus to set the delay timers.

These menus are available only if an output timing delay is selected.

For **and** and **oFd**, the default is 0.

For **dt1**, the default is 10 milliseconds for all response speeds

Use **+** and **-** to scroll through the values. Values in milliseconds do not include the decimal point; values in seconds include the decimal point.
- 1 to 999 ms (when **dt1** is selected, the 1 to 9 ms range is available for 3 and 5 ms response times)
- 1.0 to 90.0 s

Totalizer (totL)

The totalizer function changes the output only after counting a designated number of targets.

After selecting this function, **dt1** or **dt2** become available to define the output duration and **tot1** or **tot2** to define the required number of counts before the output changes.

For **tot1** and **tot2** , the default is 1 count and the maximum is 9999 counts.

For **dt1** and **dt2**, the default is 10 milliseconds. Use ⊕ and ⊖ to scroll through the values. Values in milliseconds do not include the decimal point; values in seconds include the decimal point.
- 1 to 999 ms (when **dt1** or **dt2** is selected, the 1 to 9 ms range is available for 1.5, 2, 3, and 5 ms response times)
- 1.0 to 90.0 s

From Run mode, press **SELECT** to change the display to show the current totalizer count. Pressing **SELECT** again changes the display back to the measured distance.

The totalizer count automatically resets after re-teaching the switch point distance or turning the sensor off.

Zero Reference Location (ZEro)

Use this menu to select the zero-reference location. Changing the zero-reference location only affects the readout on the display and does not affect the output.

The default is **nEAr**, 0 = the front of the sensor. This menu is not available in dual (intensity + distance) mode.

- nEAr —0 is the front of the sensor and the measurement increases further from the sensor.
- FAr —0 is the maximum range and the measurement increases closer to the sensor.

Shift the Zero Reference Location after a TEACH (ShFt)

Use this menu to select whether the sensor shifts the zero-reference location based on the last TEACH process.

The default is **oFF**, 0 = the front of the sensor or the maximum range. This menu is not available in dual (intensity + distance) mode.

- on —Shift the zero-reference location to one of the taught positions with each TEACH
- oFF —0 = the front of the sensor or the maximum range, depending on the **ZEro** setting

This figure illustrates three examples of how changes to the zero and shift settings affect what distance readout is shown on the display when in 2-pt TEACH mode. Changes to the zero setting affect the direction in which the distance increases. Shifting the zero reference location only affects the readout on the display and does not affect the output.

© Banner Engineering Corp. All rights reserved.
www.bannerengineering.com

Example Zero and Shift settings

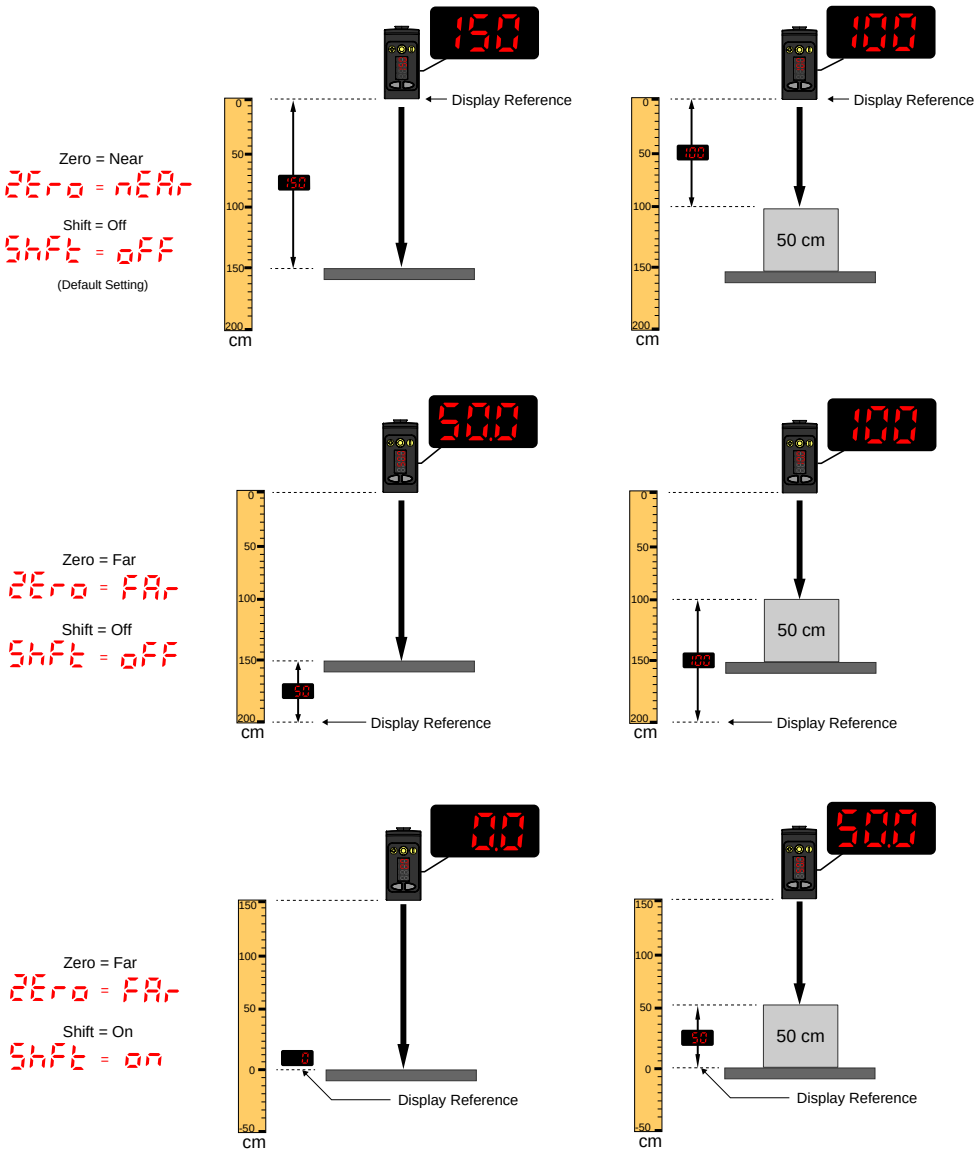

Offset (oFS1 and oFS2)

Use this menu to set an offset from the taught surface during a TEACH procedure. This menu is available only if one-point window (foreground suppression) mode, one-point background suppression mode, jam retroreflective mode, or jam background suppression mode is selected. For Channel 2, the output must be set to light operate or dark operate.

NOTE: The number that follows on the display indicates which channel is selected.

The offset is automatically calculated or manually defined as a consistently applied value. **Auto** is the default option. Use +/- to select a value. Values increase or decrease by up to 191 cm (2000 mm models).

For BGS mode, the default is **Auto** because the Q5X automatically selects where to position the switch point. For FGS mode, the default is 0 because the window is centered around the taught target.

A positive offset value always shifts the switch point location or the FGS window towards the sensor.

The taught surface must be inside of the defined sensing range. When the teach mode is set to FGS or JRet, some portion of the window must be located within the sensing range. When the teach mode is set to BGS or JBGS, the offset value must be within the defined sensing range. If an offset value falls outside of the sensing range, a message displays. See the applicable TEACH procedure for more information.

© Banner Engineering Corp. All rights reserved.
www.bannerengineering.com

Display View (diSP)

Use this menu to select the display view.

When the sensor is in sleep mode, the display wakes with the first button press.

- 1234—Normal (default setting). When **1234** is inverted, the display is in inverted view model (rotated 180°).
- oFF —Normal and the display enters sleep mode after 60 seconds. When **oFF** is inverted, the display view is inverted (rotated 180°) and the display enters sleep mode after 60 seconds.

Units (un1t)

Use this menu to set the displayed units to centimeters (cm) or inches (").

- cm —centimeter (with a decimal point at < 60 centimeters)
- Inch—inch (with a decimal point at < 24 inches)

Output Type Polarity (PoL)

Use this menu to select the output polarity.

- dEF (Default)—Push-Pull on pin 4 and solid state PNP on pin 2
- PnP —Solid state PNP on pins 2 and 4
- nPn —Solid state NPN on pins 2 and 4

Exit Setup Mode (End)

Use this menu to end Setup mode.

Navigate to **End** and press **SELECT** to exit Setup mode and return to Run mode.

Reset to Factory Defaults (rSEt)

Use this menu to restore the sensor to the factory default settings.

- no —Select to return to the sensor menu without restoring the defaults.
- YES —Select to apply the factory defaults and return to Run mode.

Factory Default Settings

Setting	Factory Default
Delay Timers (dLY)	oFF —No delay
Display View (diSP)	1234—Normal, no sleep mode
Output (out1, out2)	Lo—Light Operate
Response Speed (SPd)	50—50 ms
Shift the Zero Reference Location after a TEACH (SHFt)	oFF —0 = the front of the sensor
CH1 TEACH Mode (tch1)	JrEt—Jam Retroreflective
CH2 TEACH Mode (tch2)	JbGS—Jam Background Suppression
Zero Reference Location (zEro)	nEAr—Measurement increases further from sensor
Display Units (un1t)	cm —Centimeters
Output Polarity (PoL)	dEF—Default: Push-pull on pin 4 and PNP on pin 2

Manual Adjustments

Manually adjust the sensor switch point using the ⊕ and ⊖ buttons.

© Banner Engineering Corp. All rights reserved.
www.bannerengineering.com

1. From Run mode, press either + or - one time. The selected channel displays briefly, then the current setting value flashes slowly.
2. Press + to increase the setting or - to decrease the setting. After 1 second of inactivity, the new setting value flashes rapidly, the new setting is accepted, and the sensor returns to Run mode.

NOTE: When FGS TEACH mode is selected, manual adjustment moves both sides of the symmetrical threshold window simultaneously, expanding and collapsing the window size. Manual adjustment does not move the center point of the window.

NOTE: When Dual TEACH mode is selected, after the TEACH process is completed, use the manual adjustment to adjust the sensitivity of the thresholds around the taught reference point. The taught reference point is a combination of the measured distance and returned signal intensity from the reference target. Manual adjustment does not move the taught reference point, but pressing + increases the sensitivity, and pressing - decreases the sensitivity. When re-positioning the sensor or changing the reference target, re-teach the sensor.

RNG

When the sensor is in JRET or JBGS TEACH mode, use the + or - buttons to adjust the RNG value. The RNG value defines the minimum movement the sensor must see to determine that an object is moving (not jammed). For most applications, the default setting is acceptable.

Remote Input

Use the remote input to program the sensor remotely.

Remote input is available from the Channel 2 menu. Set **Out2** to **Set**.

The remote input provides limited programming options. The remote input is either Active High or Active Low depending on the polarity setting. If the polarity is set to **def** or **PNP**, the remote input is Active High. If polarity is set to **NPN**, the remote input is Active Low.

For Active High, connect the white wire to 24 V DC with a remote switch connected between the wire and 24 V DC.

For Active Low, connect the white wire to ground (0 V DC) with a remote switch connected between the wire and ground.

Pulse the remote input according to the diagram and the instructions provided in this manual.

The length of the individual programming pulses is equal to the value **T: 0.04 seconds ≤ T ≤ 0.8 seconds**.

Exit remote programming modes by activating the remote input for longer than 2 seconds.

© Banner Engineering Corp. All rights reserved.
www.bannerengineering.com

Remote Input Map

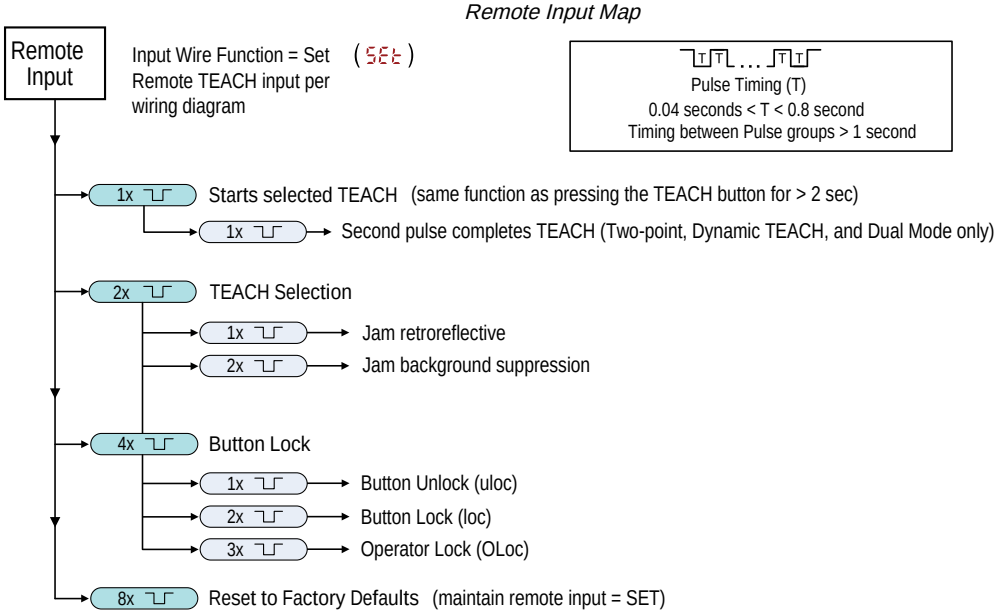

Select the TEACH Mode Using the Remote Input

1. Access the TEACH selection.

Action		Result
Double-pulse the remote input.	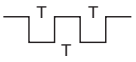	tch displays.

2. Select the desired TEACH mode.

Action		Result
Pulses	**TEACH Mode**	The selected TEACH method displays for a few seconds and the sensor returns to Run mode.
1 	Jam retroreflective	
2 	Jam background suppression	
Pulses	**TEACH Mode**	
1 	Two-point TEACH	
2 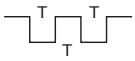	One-point TEACH	

Reset to Factory Defaults Using the Remote Input

Follow the instructions below to reset the Q5X to factory defaults using Remote Input.

Eight-pulse the remote input to apply the factory defaults and return to Run mode.

The input wire function remains at remote teach input (**SEt**).

© Banner Engineering Corp. All rights reserved.
www.bannerengineering.com

Locking and Unlocking the Sensor Buttons

Use the lock and unlock feature to prevent unauthorized or accidental programming changes. Three settings are available:

- uLoc —The sensor is unlocked and all settings can be modified (default).
- Loc — The sensor is locked and no changes can be made.
- OLoc —The switch point value can be changed by teaching or manual adjustment, but no sensor settings can be changed through the menu.

> **NOTE:** When the sensor is in either Loc or OLoc mode, the active channel can be changed using **(+)(CH1/CH2)**.

When in Loc mode, Loc displays when the **(SELECT)(TEACH)** button is pressed. The switch point displays when **(+)(CH1/CH2)** or **(-)(MODE)** are pressed, but Loc displays if the buttons are pressed and held.

When in OLoc mode, Loc displays when **(-)(MODE)** is pressed and held. To access the manual adjust options, briefly press and release **(+)(CH1/CH2)** or **(-)(MODE)**. To enter TEACH mode, press the **(SELECT)(TEACH)** button and hold for longer than 2 seconds.

Button Instructions

To enter Loc mode, hold ⊕ and press ⊖ four times. To enter OLoc mode, hold ⊕ and press ⊖ seven times. Holding ⊕ and pressing ⊖ four times unlocks the sensor from either lock mode and the sensor displays uLoc.

Remote Input Instructions

1. Access the remote input.

Action		Result
Four-pulse the remote input.	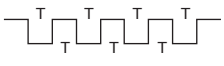	The sensor is ready to have the button state defined and btn displays.

2. Lock or unlock the sensor buttons.

Action		Result
Single-pulse the remote input to unlock the sensor.		uLoc displays and the sensor returns to Run mode.
Double-pulse the remote input to lock the sensor.	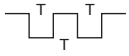	Loc displays and the sensor returns to Run mode.
Triple-pulse the remote input to apply the operator lock to the sensor	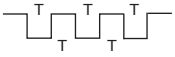	OLoc displays and the sensor returns to Run mode

TEACH Procedures

Use the following procedures to teach the sensor.

To cancel a TEACH procedure, press **TEACH** for longer than 2 seconds, or hold the remote input high for longer than 2 seconds. **CnCL** momentarily displays when a TEACH procedure is canceled.

© Banner Engineering Corp. All rights reserved.
www.bannerengineering.com

Two-Point Static Background Suppression (2-Pt)

Two-point TEACH sets a single switch point.The sensor sets the switch point between two taught target distances, relative to the shifted origin location.

Two-Point Static Background Suppression (Light Operate shown)

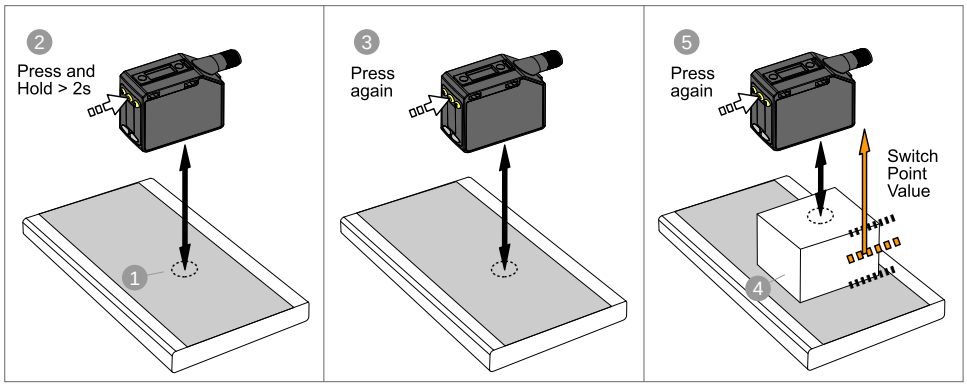

NOTE: The sensor must be set to **tch** = **2-Pt** to use the following instructions.

NOTE: To program the sensor using remote input, remote input must be enabled (**out2** = **SEt**).

1. Present the target.

Method	Action	Result
Push Button	Present the first target. The sensor-to-target distance must be within the sensor's range.	The target's measurement value displays.
Remote Input		

2. Start the TEACH mode.

Method	Action		Result
Push Button	Press and hold **TEACH** for longer than 2 seconds.		**SEt** and **1St** flash alternately on the display. The FLO, RET, and BGS indicators flash.
Remote Input	No action required.		N/A

3. Teach the sensor.

Method	Action		Result
Push Button	Press **TEACH** to teach the target.		The sensor is taught the first target. **SEt**, **2nd**, and the current distance measurement flash alternately on the display. The FLO, RET, and BGS indicators flash.
Remote Input	Single-pulse the remote input.		

4. Present the target.

Method	Action	Result
Push Button	Present the second target. The sensor-to-target distance must be within the sensor's range.	**SEt**, **2nd**, and the distance measurement flash alternately on the display. The FLO, RET, and BGS indicators flash.
Remote Input		

5. Teach the sensor.

© Banner Engineering Corp. All rights reserved.
www.bannerengineering.com

Method	Action		Result
Push Button	Press **TEACH** to teach the target.		The new switch point flashes rapidly and the sensor returns to Run mode.
Remote Input	Single-pulse the remote input.		

See "Performance Curves" on page 11 for the minimum object separation.

Expected TEACH Behavior for Two-Point Static Background Suppression

Condition	TEACH Result	Display
Two valid distances that are greater than or equal to the horizontal minimum object separation	Sets a switch point between the two taught distances.	The switch point distance flashes on the display.
Two valid distances that are less than the horizontal minimum object separation	Sets a switch point in front of the furthest taught distance equal to the uniform reflectivity minimum object separation.	**bGS** and the switch point distance flash alternately on the display.
One valid distance with one invalid TEACH point	Sets a switch point between the one taught distance and the maximum range.	**obJt** and the switch point distance flash alternately on the display.
Two invalid TEACH points	Sets a switch point for the currently selected channel at 197 cm.	**FuLL** and the switch point distance flash alternately on the display.

Dynamic Background Suppression (dYn)

Dynamic TEACH sets a single switch point during machine run conditions.

Dynamic TEACH is recommended for applications where a machine or process may not be stopped for teaching. The sensor takes multiple samples and the switch point is set between the minimum and the maximum sampled distances.

Dynamic Background Suppression

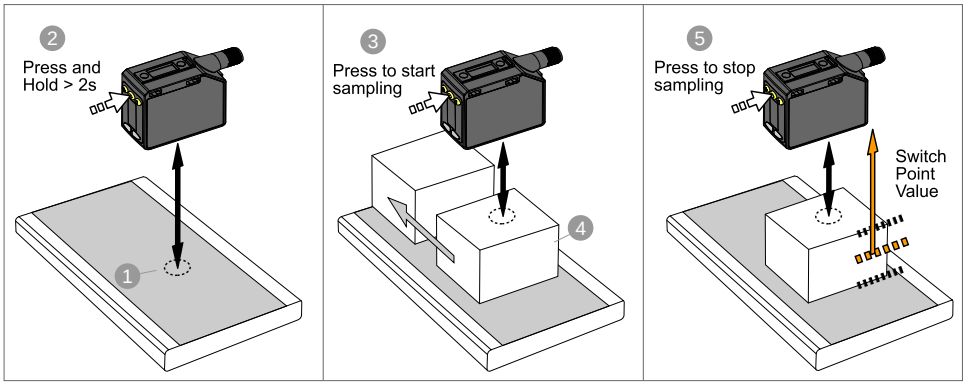

NOTE: The sensor must be set to **tch** = **dYn** to use the following instructions. The FLO and RET indicators are amber to indicate Dynamic TEACH mode.

NOTE: To program the sensor using remote input, remote input must be enabled (**out2** = **SEt**).

1. Present the target.

Method	Action	Result
Push Button	Present the first target. The sensor-to-target distance must be within the sensor's range.	The target's measurement value displays.
Remote Input		

2. Start the TEACH mode.

© Banner Engineering Corp. All rights reserved.
www.bannerengineering.com

Method	Action		Result
Push Button	Press and hold **TEACH** for longer than 2 seconds.		**dYn** and **Strt** flash alternately on the display. The FLO and RET indicators flash.
Remote Input	No action required.		N/A

3. Teach the sensor.

Method	Action		Result
Push Button	Press **TEACH** to teach the target.		The sensor begins sampling target distance information and **dYn** and **StoP** flash alternately on the display. The FLO and RET indicators flash.
Remote Input	Single-pulse the remote input.		

4. Present the targets.

Method	Action	Result
Push Button	Present additional targets. The sensor-to-target distance must be within the sensor's range.	The sensor continues to sample target distance information and **dYn** and **StoP** flash alternately on the display. The FLO and RET indicators flash.
Remote Input		

5. Teach the sensor.

Method	Action		Result
Push Button	Press **TEACH** to stop teaching the sensor.		The new switch point flashes rapidly and the sensor returns to Run mode.
Remote Input	Single-pulse the remote input.		

See "Performance Curves" on page 11 for the minimum object separation.

Expected TEACH Behavior for Dynamic Background Suppression

Condition	TEACH Result	Display
Two valid distances that are greater than or equal to the horizontal minimum object separation	Sets a switch point between the two taught distances.	The switch point distance flashes on the display.
Two valid distances that are less than the horizontal minimum object separation	Sets a switch point in front of the furthest taught distance equal to the uniform reflectivity minimum object separation.	**bGS** and the switch point distance flash alternately on the display.
One valid distance with one invalid TEACH point	Sets a switch point between the one taught distance and the maximum range.	**obJt** and the switch point distance flash alternately on the display.
Two invalid TEACH points	Sets a switch point for the currently selected channel at 120 cm.	**bGS** and the switch point distance flash alternately on the display.

One-Point Window (Foreground Suppression) (FGS)

One-point window sets a window (two switch points) centered around the taught target distance.

Loss of signal is treated as a detection in One-Point Window mode. The size of the taught window is the vertical minimum object separation. See "Performance Curves" on page 11.

Manually adjust the window size from Run mode using **+** and **-**.

© Banner Engineering Corp. All rights reserved.
www.bannerengineering.com

One-Point Window (Foreground Suppression)

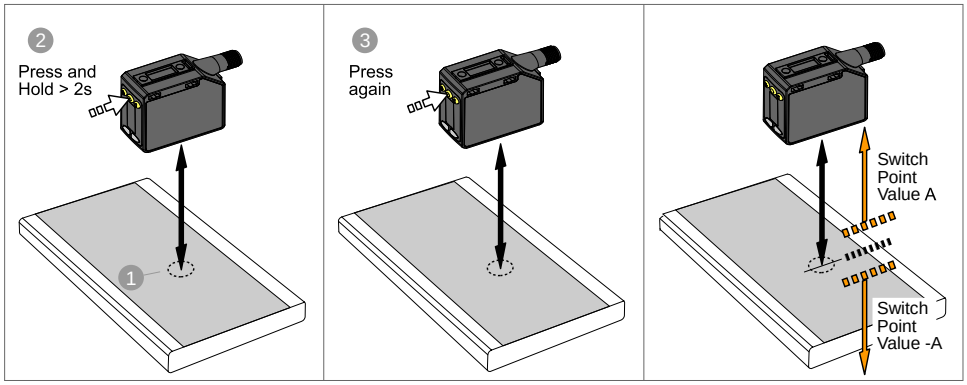

To reliably detect changes from the taught background, if multiple laser reflections are returning to the sensor, the output status is treated as though the target is outside of the taught window. The display alternates between **2-Lr** and the measured distance. Realign the laser to avoid light reflecting off of multiple targets if this extra level of verification is not desired.

NOTE: The sensor must be set to **tch** = **FGS** to use the following instructions. The RET and BGS indicators are amber to indicate One-Point Window (Foreground Suppression) mode.

NOTE: To program the sensor using remote input, remote input must be enabled (**out2** = **SEt**).

1. Present the target.

Method	Action	Result
Push Button	Present the target. The sensor-to-target distance must be within the sensor's range.	The target's measurement value displays.
Remote Input		

2. Start the TEACH mode.

Method	Action	Result
Push Button	Press and hold **TEACH** for longer than 2 seconds.	**Light Operate** **SEt** and **on** flash alternately on the display. The RET and BGS indicators flash. **Dark Operate** **SEt** and **oFF** flash alternately on the display. The RET and BGS indicators flash.
Remote Input	No action required.	N/A

3. Teach the sensor.

Method	Action	Result
Push Button	Press **TEACH** to teach the target.	The ± window size flashes rapidly and the sensor returns to Run mode.
Remote Input	Single-pulse the remote input. 	

See "Performance Curves" on page 11 for the minimum object separation.

© Banner Engineering Corp. All rights reserved.
www.bannerengineering.com

Expected TEACH Behavior for One-Point Window (Foreground Suppression)

Condition	TEACH Result	Display
One valid TEACH point with both switch points in range (with offset, if applicable)	Sets a window (two switch points) centered around the taught distance. The ± window size is equal to the non-uniform reflectivity minimum object separation. The two switch points always stay within the specified sensing range.	The ± window size flashes on the display.
One invalid TEACH Point	Sets a window (two switch points) centered around 150 cm. The window size is ± 10 cm.	- - - - and the window center point distance flash alternately on the display.
One valid TEACH point with one switch point within range and one switch point out of range (with offset, if applicable)	Sets a window (two switch points) that is centered at the TEACH point (after offset, if applicable) with one switch point at the maximum range.	- - - - and the ± window size flash alternately on the display.
One valid TEACH point that, after the offset, results in both switch points outside of the range	Sets a window (two switch points) centered around 150 cm. The window size is ± 10 cm.	**oFSt** and the window center point distance flash alternately on the display.

One-Point Background Suppression (bGS)

One-point background suppression sets a single switch point in front of the taught target distance. Objects beyond the taught switch point are ignored.

The switch point is set in front of the taught target distance by the vertical minimum object separation. See "Performance Curves" on page 11.

One-Point Background Suppression

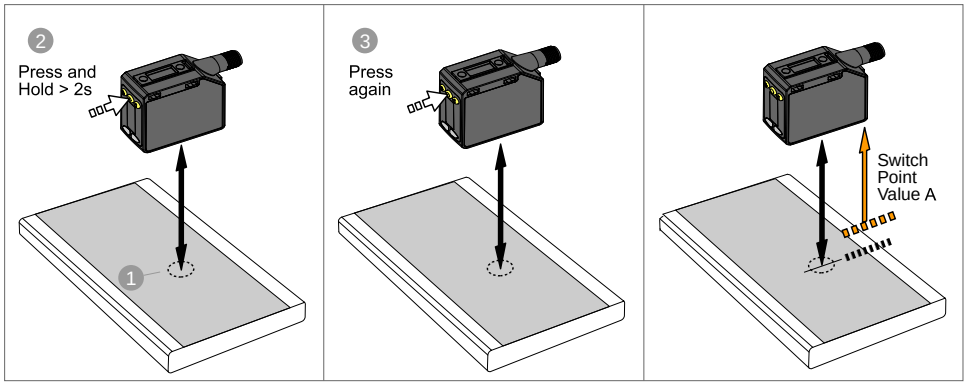

NOTE: The sensor must be set to **tch** = **bGS** to use the following instructions. The BGS and FLO indicators are amber to indicate Background Suppression mode.

NOTE: To program the sensor using remote input, remote input must be enabled (**out2** = **SEt**).

1. Present the target.

Method	Action	Result
Push Button	Present the target. The sensor-to-target distance must be within the sensor's range.	The target's measurement value displays.
Remote Input		

2. Start the TEACH mode.

© Banner Engineering Corp. All rights reserved.
www.bannerengineering.com

Method	Action		Result
Push Button	Press and hold **TEACH** for longer than 2 seconds.		**Light Operate** **SEt** and **oFF** flash alternately on the display. The BGS and FLO indicators flash. **Dark Operate** **SEt** and **on** flash alternately on the display. The BGS and FLO indicators flash.
Remote Input	No action is required.		N/A

3. Teach the sensor.

Method	Action		Result
Push Button	Press **TEACH** to teach the target.		The new switch point flashes rapidly and the sensor returns to Run mode.
Remote Input	Single-pulse the remote input.		

See "Performance Curves" on page 11 for the minimum object separation.

Expected TEACH Behavior for One-Point Background Suppression

Condition	TEACH Result	Display
One valid TEACH point If an Offset is applied, the TEACH point is still valid	Sets a switch point in front of the taught distance equal to the non-uniform reflectivity minimum object separation.	The switch point distance flashes on the display.
One invalid TEACH point	Sets a switch point at 120 cm.	**bGS** and the switch point distance flash alternately on the display.
One valid TEACH point that, after offset, becomes invalid	Sets a switch point at 120 cm.	**oFSt** and the switch point distance flash alternately on the display.

Dual (Intensity + Distance) (duAL)

Dual (intensity + distance) TEACH records the distance and amount of light received from the reference surface.

The output switches when an object passing between the sensor and the reference surface changes the perceived distance or amount of returned light. For more information, see "Additional Information" on page 39.

NOTE: To use the following instructions, set the sensor to **tch** = **duAL**. The RET, FLO, and BGS indicators are amber.

NOTE: To program the sensor using remote input, remote input must be enabled (**out2** = **SEt**).

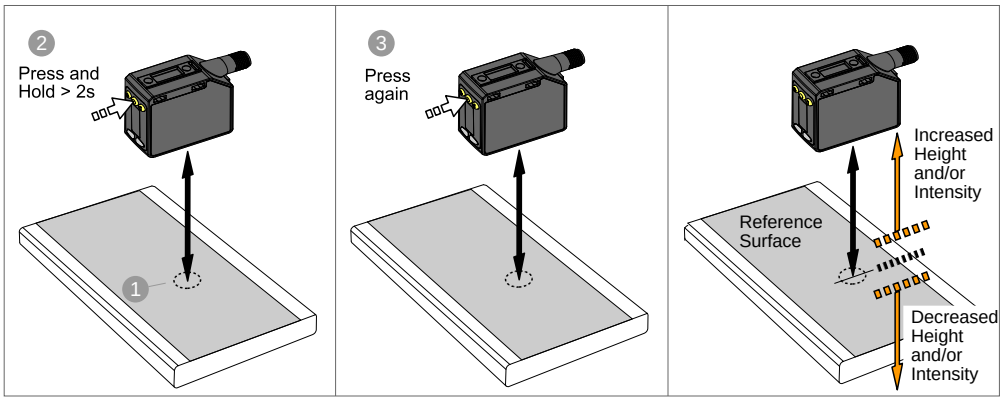

1. Present the target.

© Banner Engineering Corp. All rights reserved.
www.bannerengineering.com

Method	Action	Result
Push Button **Remote Input**	Present the reference target.	The target's match percentage displays

2. Start the TEACH mode.

Method	Action	Result
Push Button	Press and hold the TEACH button for more than 2 seconds.	Light Operate: **SEt** and **on** flash on the display. The RET, FLO, and BGS indicators flash. Dark Operate: **SEt** and **oFF** flash on the display. The RET, FLO, and BGS indicators flash.
Remote Input	No action is required.	N/A

3. Teach the sensor.

Method	Action		Result
Push Button	Press the TEACH button.		The switching threshold flashes rapidly and the sensor returns to Run mode.
Remote Input	Single-pulse the remote input.		

Expected TEACH Behavior for Dual (Intensity + Distance) Mode

Condition	TEACH Result	Display
One valid reference surface is taught within sensing range	Sets a dual (intensity + distance) window centered around the taught reference surface. The ± window size is the previously used switching threshold, or 50% by default.	The switching threshold flashes on the display.
One reference surface is taught outside the sensing range	Sets a dual (intensity + distance) window centered around the taught reference surface that is outside the sensing range. The sensing conditions may not be as reliable.	**out** flashes on the display.
One invalid TEACH Point	No reference surface is taught, the output will change when any object is detected.	**FuLL** flashes on the display.

Jam Retroreflective (JrEt)

Jam retroreflective TEACH mode sets a window with two switch points centered around the taught target distance.

This TEACH mode requires a stationary target for a reference point, such as a back rail or reflector. Manually adjust the window using the **wnd1**/**wnd2** menu. Measurements inside this window are considered not jammed. An independent jam range (RNG) value is set which defines the minimum movement required to determine that an object is moving (not jammed). A Loss of Signal for the user-defined time is treated as a jam.

Jam Retroreflective Setup Diagram

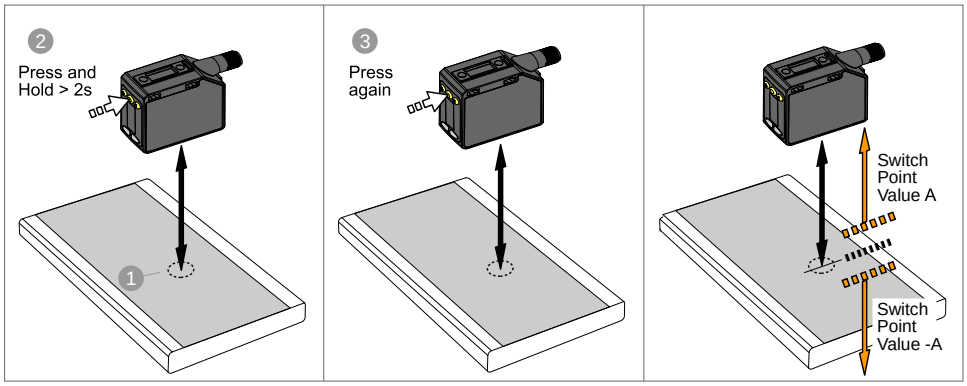

© Banner Engineering Corp. All rights reserved.
www.bannerengineering.com

NOTE: The sensor must be set to tch = JrEt to use the following instructions. The RET indicator is amber to indicate Jam Retroreflective mode.

NOTE: To program the sensor using remote input, remote input must be enabled (owt2 = SEt).

1. Present the target.

Method	Action	Result
Push Button	Present the target. The sensor-to-target distance must be within the sensor's range.	The target's measurement value displays.
Remote Input		

2. Start the TEACH mode.

Method	Action	Result
Push Button	Press and hold **TEACH** for longer than 2 seconds.	rn01 or rn02 flashes momentarily. **Light Operate** SEt and oFF flash alternately on the display. The RET and BGS indicators flash. **Dark Operate** SEt and on flash alternately on the display. The RET and BGS indicators flash.
Remote Input	No action required.	N/A

3. Teach the sensor.

Method	Action	Result
Push Button	Press **TEACH** to teach the target.	The ± window size flashes rapidly and the sensor returns to Run mode.
Remote Input	Single-pulse the remote input. 	

See "Performance Curves" on page 11 for the minimum object separation.

Expected TEACH Behavior for Jam Retroreflective

Condition	TEACH Result	Display
One valid TEACH point with both switch points in range (with offset, if applicable)	Sets a window (two switch points) centered around the taught distance. The ± window size is equal to the non-uniform reflectivity minimum object separation. The two switch points always stay within the specified sensing range.	The ± window size flashes on the display.
One invalid TEACH Point	Sets a window (two switch points) centered around 150 cm. The window size is ± 10 cm.	---- and the window center point distance flash alternately on the display.
One valid TEACH point with one switch point within range and one switch point out of range (with offset, if applicable)	Sets a window (two switch points) that is centered at the TEACH point (after offset, if applicable) with one switch point at the maximum range.	---- and the ± window size flash alternately on the display.
One valid TEACH point that, after the offset, results in a both switch points outside of the range	Sets a window (two switch points) centered around 150 cm. The window size is ± 10 cm.	oFSt and the window center point distance flash alternately on the display.

© Banner Engineering Corp. All rights reserved.
www.bannerengineering.com

Jam Background Suppression (JbGS)

Jam background suppression TEACH mode sets a background suppression point in front of the taught target distance.

This TEACH mode does not require a stationary target for a reference point. Manually adjust the background suppression point using the **bGS1**/**bGS2** menu. Measurements beyond the taught point are qualified as not jammed. An independent jam range (RNG) value is set which defines the minimum movement required to determine that an object is moving (not jammed). A Loss of Signal condition is not treated as a jam.

Jam Background Suppression Setup Diagram

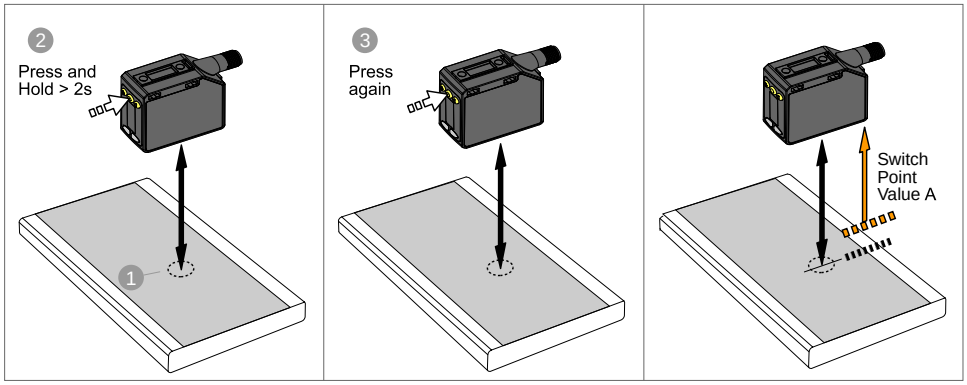

NOTE: The sensor must be set to tch = JbGS to use the following instructions. The BGS indicator is amber to indicate Jam Background Suppression mode.

NOTE: To program the sensor using remote input, remote input must be enabled (owt2 = SEt).

1. Present the target.

Method	Action	Result
Push Button	Present the target. The sensor-to-target distance must be within the sensor's range.	The target's measurement value displays.
Remote Input		

2. Start the TEACH mode.

Method	Action	Result
Push Button	Press and hold **TEACH** for longer than 2 seconds.	rnG1 or rnG2 flashes momentarily. **Light Operate** SEt and oFF flash alternately on the display. The BGS and FLO indicators flash. **Dark Operate** SEt and on flash alternately on the display. The BGS and FLO indicators flash.
Remote Input	No action required.	N/A

3. Teach the sensor.

Method	Action	Result
Push Button	Press **TEACH** to teach the target.	The new switch point flashes rapidly and the sensor returns to Run mode.

Continued on page 37

© Banner Engineering Corp. All rights reserved.
www.bannerengineering.com

Continued from page 36

Method	Action		Result
Remote Input	Single-pulse the remote input.		

See "Performance Curves" on page 11 for the minimum object separation.

Expected TEACH Behavior for Jam Background Suppression

Condition	TEACH Result	Display
One valid TEACH point If an Offset is applied, the TEACH point is still valid	Sets a switch point in front of the taught distance equal to the non-uniform reflectivity minimum object separation.	The switch point distance flashes on the display.
One invalid TEACH point	Sets a switch point at 120 cm.	bAS and the switch point distance flash alternately on the display.
One valid TEACH point that, after offset, becomes invalid	Sets a switch point at 120 cm.	oFSt and the switch point distance flash alternately on the display.

Pulse Frequency Modulation (PFM) Output (PULS)

The Q5X can generate pulses whose frequency are proportional to the sensor's measured distance, thereby providing a method for representing an analog signal with only a discrete counter.

The sensing range of the sensor is scaled from 100 Hz to 600 Hz (100 Hz equals the near range limit of the sensor, 600 Hz equals the far sensing range limit). An output of 50 Hz represents a Loss of Signal (**LOS**) condition where there is no target or the target is out of the sensor's range. There is a 2 second delay before the sensor sets the output to 50 Hz to indicate loss of signal. During the 2 seconds, the output will hold the last PFM value. To find the Pulse Frequency Modulation (PFM) Output, set **out2** to **PULS**.

Sync Master/Slave

Two Q5X sensors may be used together in a single sensing application.

To eliminate crosstalk between the two sensors, configure one sensor to be the master and one to be the slave. In this mode, the sensors alternate taking measurements and the response speed doubles.

> **IMPORTANT:** The master sensor and the slave sensor must be programmed for the same Response Speed and Gain and Sensitivity settings. The master sensor and slave sensor must share a common power source.

1. Configure the first sensor as the master; navigate to: **inPt › nASt**.
2. Configure the second sensor as the slave; navigate: **inPt › SLUE**.
3. Connect the white wires of the two sensors together.

© Banner Engineering Corp. All rights reserved.
www.bannerengineering.com

Chapter Contents

Chapter 5 IO-Link Interface

IO-Link® [3]is a point-to-point communication link between a master device and sensor. Use IO-Link to parameterize sensors and transmit process data automatically.

For the latest IO-Link protocol and specifications, see www.io-link.com.

Each IO-Link device has an IODD (IO Device Description) file that contains information about the manufacturer, article number, functionality etc. This information can be easily read and processed by the user. Each device can be unambiguously identified via the IODD as well as via an internal device ID. Download the Q5X's IO-Link IODD package (p/n 215344) from Banner Engineering's website at www.bannerengineering.com.

Banner has also developed Add On Instruction (AOI) files to simplify ease-of-use between the Q5X, multiple third-party vendors' IO-Link masters, and the Logix Designer software package for Rockwell Automation PLCs. Three types of AOI files for Rockwell Allen-Bradley PLCs are listed below. These files and more information can be found at www.bannerengineering.com.

Process Data AOIs—These files can be used alone, without the need for any other IO-Link AOIs. The job of a Process Data AOI is to intelligently parse out the Process Data word(s) in separate pieces of information. All that is required to make use of this AOI is an EtherNet/IP connection to the IO-Link Master and knowledge of where the Process Data registers are located for each port.

Parameter Data AOIs—These files require the use of an associated IO-Link Master AOI. The job of a Parameter Data AOI, when working in conjunction with the IO-Link Master AOI, is to provide quasi-realtime read/write access to all IO-Link parameter data in the sensor. Each Parameter Data AOI is specific to a given sensor or device.

IO-Link Master AOIs—These files require the use of one or more associated Parameter Data AOIs. The job of an IO-Link Master AOI is to translate the desired IO-Link read/write requests, made by the Parameter Data AOI, into the format a specific IO-Link Master requires. Each IO-Link Master AOI is customized for a given brand of IO-Link Master.

Add and configure the relevant Banner IO-Link Master AOI in your ladder logic program first; then add and configure Banner IO-Link Device AOIs as desired, linking them to the Master AOI as shown in the relevant AOI documentation.

[3] IO-Link® is a registered trademark of PROFIBUS Nutzerorganisation e.V.

© Banner Engineering Corp. All rights reserved.
www.bannerengineering.com

Chapter Contents

Dual (Intensity + Distance) Mode 39
Dual Mode Reference Surface Considerations 39
Dual Mode Considerations for Clear and Transparent Object Detection 40
Abbreviations 41

Chapter 6 Additional Information

Dual (Intensity + Distance) Mode

Dual TEACH mode, dual intensity + distance window, expands the applications the Q5X can solve by combining distance-based detection with light intensity thresholds.

In background suppression (DYN, 1-pt, 2-pt) and foreground suppression (FGS) TEACH modes, the Q5X sensor compares changes in the measured distance between the sensor and target to control the output state. In dual TEACH mode, the user teaches the Q5X a fixed reference surface, and the sensor compares intensity and distance readings against the reference surface it was taught. After teaching the reference target, the displayed value is calibrated to 100P, or a 100% match. When an object enters the sensor's field of view, the degree of consistency with the reference surface becomes lower and causes a change in sensor output.

In dual mode, you can detect when the target is present at the right distance and when it returns the right amount of light. This is useful in error-proofing applications where you need to know not only that the part is present (distance), but also that it is the correct part (intensity).

In dual mode, the Q5X requires a reference surface (far left). Once taught, the distance and intensity of the reference surface are recorded and used as a baseline. A user-adjustable switching threshold is set, and changes in distance and/or intensity outside the switching threshold creates a sensor output change. The example uses a 90% (90P) match condition with a 10% change in intensity and/or distance from the reference surface required to change the output state. The default-switching threshold is a 50% match to the reference condition (50P); this sets the threshold 50% from the distance and intensity of the reference surface. A transparent object can be detected either by a change in intensity, distance, or by a double peak reflection (far right).

Dual Mode Example

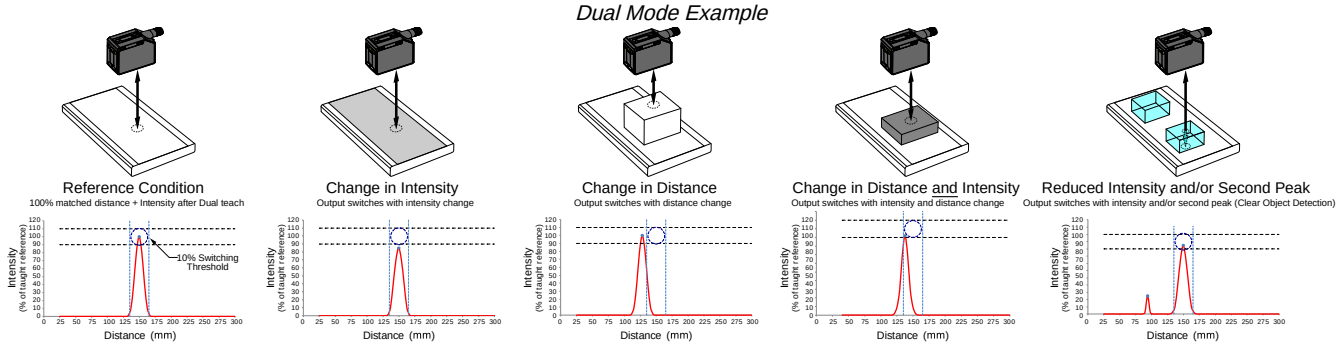

The Q5X sensor can be taught non-ideal reference surfaces, such as surfaces outside of the sensor's range, very dark surfaces, or even empty space. These situations may enable applications requiring a long range detection but are subject to typical diffuse mode detection challenges.

Dual Mode Reference Surface Considerations

Optimize reliable detection by applying these principles when selecting your reference surface, positioning your sensor relative to the reference surface, and presenting your target.

The robust detection capabilities of the Q5X allows successful detection even under non-ideal conditions in many cases. Typical reference surfaces are metal machine frames, conveyor side rails, or mounted plastic targets. Contact Banner Engineering if you require assistance setting up a stable reference surface in your application.

1. Select a reference surface with these characteristics where possible:
    - Matte or diffuse surface finish
    - Fixed surface with no vibration

© Banner Engineering Corp. All rights reserved.
www.bannerengineering.com

- Dry surface with no build-up of oil, water, or dust

2. Position the reference surface between 200 mm (20 cm) and the maximum sensing range.
3. Position the target to be detected as close to the sensor as possible, and as far away from the reference surface as possible.
4. Angle the sensing beam relative to the target and relative to the reference surface 10 degrees or more.

Dual Mode Considerations for Clear and Transparent Object Detection

The Q5X is able to detect the very small changes caused by transparent and clear objects. A transparent object can be detected either by a change in intensity, distance, or by a double-peak reflection.

The Q5X sensor can be taught non-ideal reference surfaces, such as surfaces outside of the sensor range or very dark surfaces. Teaching non-ideal reference surfaces may enable applications other than transparent or clear object detection, but best results for transparent or clear object detection require a stable reference surface.

The display shows the match percentage to the taught reference point. The user adjustable switch point defines the sensitivity and the output switches when the match percentage to the reference point crosses the switch point. Your specific application may require fine tuning of the switch point, but these values are the recommended starting values:

Match percentage to taught reference point

Switch point (%)	Typical Applications
50 (default)	Default, recommended for PET bottles and Trays
88	Recommended for thin films
50	Recommended for tinted brown, tinted green, or water-filled containers

Example mounting considerations

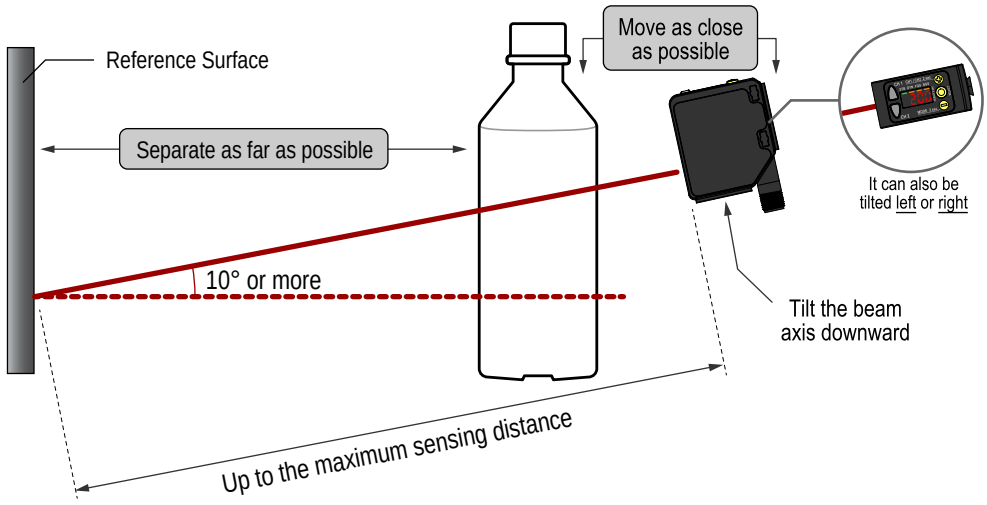

© Banner Engineering Corp. All rights reserved.
www.bannerengineering.com

Common problems and solutions for detecting clear objects—Object too close

PROBLEM:
The object is close to the reference surface

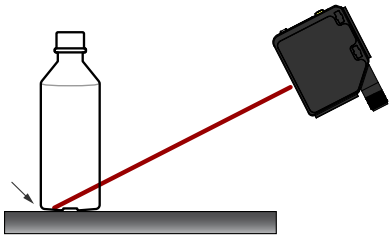

SOLUTION:
Move the target closer to the sensor

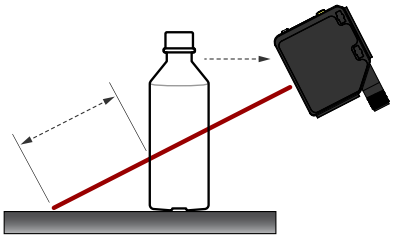

Common problems and solutions for detecting clear objects—Sensor too far

PROBLEM:
The sensor is far from the object

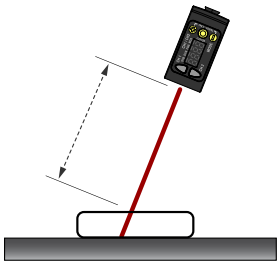

SOLUTION:
Move the sensor closer to the target

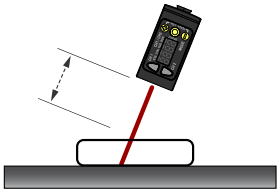

Abbreviations

The following table describes the abbreviations used on the sensor display and in this manual.

Abbreviation	Description
----	No valid signal in range
999P	The sensor has not been taught
1Sho	One-shot
1St	First
2nd	Second
2-Pt	Two-point TEACH (static background suppression)
Auto	Automatic
bGS	One-point background suppression
bGS1, bGS2	Jam background suppression point (Channel 1, Channel 2)
btn	Button
CnCL	Cancel
coNP	Complementary output
d.SP	Display read
dLAY	Delay
dLY1, dLY2	Output timing delay (Channel 1, Channel 2)

Continued on page 42

© Banner Engineering Corp. All rights reserved.
www.bannerengineering.com

Continued from page 41

Abbreviation	Description
do	Dark operate
dt1, dt2	Delay timer (Channel 1, Channel 2)
duAL	Dual mode
dyn	Dynamic background suppression
End	End—exit the sensor menu
FAr	Far zero reference location—the maximum range is 0 and the measurement increase as the target moves closer to the sensor
FOS	One-point window (foreground suppression)
FuLL	Full range
GAin	Excess gain
hiGh	High excess gain mode
hS	High speed tracking
hYS	Hysteresis
JbGS	Jam background suppression
JrEt	Jam retroreflective
Lo	Light operate
L on	Laser on
Loc	Lock/locked
LoFF	Laser off
MASt	Master
nEAr	Near zero reference location—the front of the sensor is 0 and the measurement increase as the target moves further away from the sensor
obJt	Object
oFd1, oFd2	Off delay timer (Channel 1, Channel 2)
oFF	Off
oFS1, oFS2	Offset (Channel 1, Channel 2)
oFSt	An applied offset resulted in an invalid switch point
on	On
ond1, ond2	On delay timer (Channel 1, Channel 2)
out1, out2	Output (Channel 1, Channel 2)
PoL	Output type polarity
PuLS	Pulse frequency modulation
rnG1, rnG2	Jam range (Channel 1, Channel 2)
rSEt	Reset to factory defaults

Continued on page 43

© Banner Engineering Corp. All rights reserved.
www.bannerengineering.com

Continued from page 42

Abbreviation	Description
SAVE	Save
SEt	Set or Input wire = remote teach function
ShFt	Shift the Zero Reference Location after a TEACH
SLVE	Slave
SPd	Response speed
Std	Standard excess gain mode
Strt	Start
StoP	Stop
tch1, tch2	TEACH process selection (Channel 1, Channel 2)
totL	Totalizer
tot1, tot2	Total counts
uLoc	Unlock/unlocked
unit	Unit
uuuu	Saturated signal (too much light)
Wnd1, Wnd2	Window size (Channel 1, Channel 2)
YES	Yes
zEro	Zero—select the zero reference location

© Banner Engineering Corp. All rights reserved.
www.bannerengineering.com

Chapter Contents

Cordsets 44
Brackets 45
Reference Targets 46
RSD1 Remote Display 46

Chapter 7 Accessories

Cordsets

4-pin Single-Ended M12 Female Cordsets (datasheet p/n 235937)				
Model	**Length**	**Dimensions (mm)**	**Pinout (Female)**	
BC-M12F4-22-1	1 m (3.28 ft)	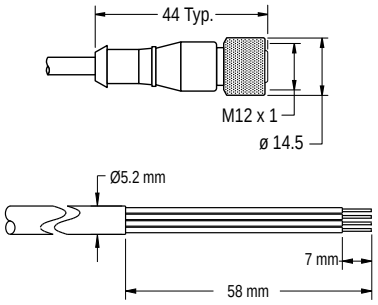	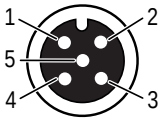	1 = Brown 2 = White 3 = Blue 4 = Black 5 = Unused
BC-M12F4-22-2	2 m (6.56 ft)			
BC-M12F4-22-5	5 m (16.4 ft)			
BC-M12F4-22-8	8 m (26.25 ft)			
BC-M12F4-22-10	10 m (30.81 ft)			
BC-M12F4-22-15	15 m (49.2 ft)			
BC-M12F4-22-20	20 m (65.61 ft)			
BC-M12F4-22-25	25 m (82.02 ft)			
BC-M12F4-22-30	30 m (98.42 ft)			

4-pin Single-Ended M12 Female Right-Angle Cordsets (datasheet p/n 235937)				
Model	**Length**	**Dimensions (mm)**	**Pinout (Female)**	
BC-M12F4A-22-1	1 m (3.28 ft)	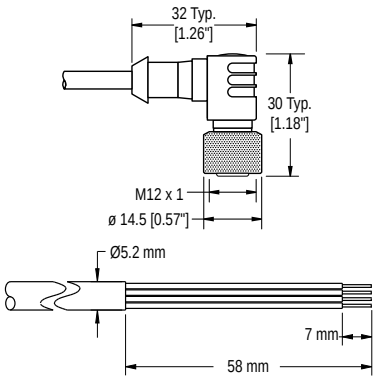	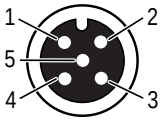	1 = Brown 2 = White 3 = Blue 4 = Black 5 = Unused
BC-M12F4A-22-2	2 m (6.56 ft)			
BC-M12F4A-22-5	5 m (16.4 ft)			
BC-M12F4A-22-8	8 m (26.25 ft)			
BC-M12F4A-22-10	10 m (30.81 ft)			
BC-M12F4A-22-15	15 m (49.2 ft)			

© Banner Engineering Corp. All rights reserved.
www.bannerengineering.com

Brackets

All measurements are listed in millimeters, unless noted otherwise. The measurements provided are subject to change.

SMBQ5X..

- Swivel bracket with tilt and pan movement for precision adjustment
- Easy sensor mounting to extruded rail T-slots
- Metric and inch size bolts are available
- Side mounting of some sensors with the 3 mm screws included with the sensor
- SMBQ5XFA CAD Files: DXF, PDF, IGS, STP
- SMBQ5XFAM10 CAD Files: DXF, PDF, IGS, STP

B = 7 × M3 × 0.5
Bolt thread (A): 3/8 - 16 × 2¼ in for SMBQ5XFA: M10 - 1.5 × 50 for SMBQ5XFAM10; n/a; no bolt included. Mounts directly to 12 mm (½ in) rods for SMBQ5XFAM12

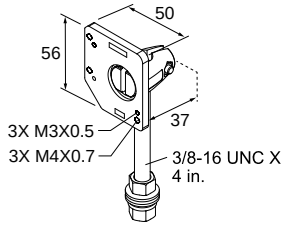

SMBAMSQ5XIPRA

- Enclosed bracket
- 13-ga. Stainless steel with borosilicate glass window
- Right angle mount plate
- CAD Files: DXF, PDF, IGS, STP

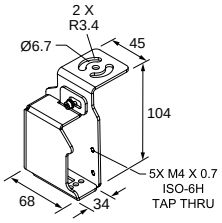

SMBAMSQ5XIPP

- Enclosed bracket
- 13-ga stainless steel with a borosilicate glass window
- Flat mount plate
- CAD Files: DXF, PDF, IGS, STP

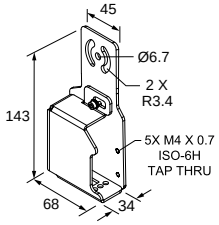

SMBQ5XDT

- Clamp bracket mounts to sensor dovetail
- Translation adjustment for sensor alignment
- Aluminum clamp - 6.5mm maximum plate thickness
- CAD Files: DXF, PDF, IGS, STP

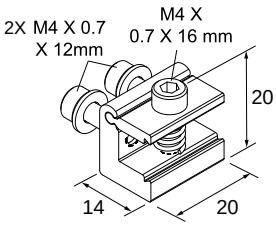

SMBAMSQ5XP

- Flat SMBAMS series bracket
- Articulation slots for 30 deg rotation
- 13-ga. 304 stainless steel
- CAD Files: DXF, PDF, IGS, STP

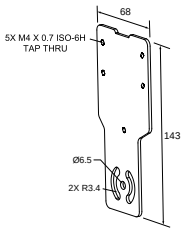

© Banner Engineering Corp. All rights reserved.
www.bannerengineering.com

SMBAMSQ5XRA

- Right-angle SMBAMS series bracket
- Articulation slots for 30 deg rotation
- 13-ga. 304 stainless steel
- CAD Files: DXF, PDF, IGS, STP

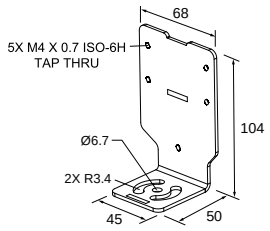

SMBQ5XM4F

- Fixing plates for mounting to back of sensor
- Stainless steel plates
- Customer-supplied mounting plate thickness minimum 2 mm maximum 4 mm with screws included in kit
- CAD Files: DXF, PDF, IGS, STP

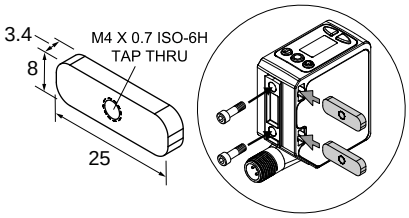

Reference Targets

All measurements are listed in millimeters, unless noted otherwise. The measurements provided are subject to change.

BRT-Q4X-60X18

- Reference target for clear object detection or dual-mode applications
- FDA-grade acetal material
- CAD Files: DXF, PDF, IGS, STP

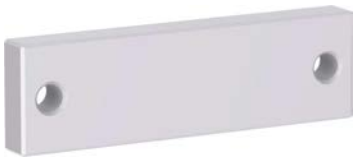

BRT-Q4X-60X50

- Reference target for clear object detection or dual-mode applications
- FDA-grade acetal material
- CAD Files: DXF, PDF, IGS, STP



RSD1 Remote Display

Use the optional RSD1 for remote monitoring and configuring compatible devices.

Refer to the RSD1 instruction manual (p/n 199621) or quick start guide (p/n 199622) for more information. See "Accessories" on page 44 for the required cordsets.

RSD1 Remote Display				
Model	**Output A and B**	**Dimensions**	**Male**	**Wiring**
RSD1QP	Configurable	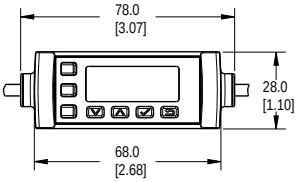	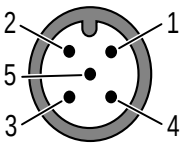	1. Brown 2. White 3. Blue 4. Black 5. Gray

© Banner Engineering Corp. All rights reserved.
www.bannerengineering.com

Chapter Contents

Troubleshooting 47
Clean Sensor with Compressed Air and Water 47
Repairs 47
Contact Us 47
Banner Engineering Corp Limited Warranty 48

Chapter 8 Product Support and Maintenance

Troubleshooting

Use the following table to correct any error codes that appear in the Q5X.

Error Codes

Error Code	Description	Resolution
- - - -	No valid signal in range	Reposition the sensor or the target
uuuu	The signal is saturated (too much light)	Reposition the sensor or the target to increase the detection distance, or increase the angle of incidence between the sensor and the target
Err E	EEPROM fault	Contact Banner Engineering to resolve
Err L	Laser fault	Contact Banner Engineering to resolve
Err C	Output short-circuited	Check the wiring for an electrical short circuit and to ensure that the wiring is correct
Err S	System fault	Contact Banner Engineering to resolve

Clean Sensor with Compressed Air and Water

Handle the sensor with care during installation and operation. Sensor windows soiled by fingerprints, dust, water, oil, etc. create stray light that may degrade the peak performance of the sensor.

Blow the window clear using filtered, compressed air, then clean as necessary using only water and a lint-free cloth. Do not use any other chemicals for cleaning.

Repairs

Contact Banner Engineering for troubleshooting of this device. **Do not attempt any repairs to this Banner device; it contains no field-replaceable parts or components.** If the device, device part, or device component is determined to be defective by a Banner Applications Engineer, they will advise you of Banner's RMA (Return Merchandise Authorization) procedure.

> **IMPORTANT:** If instructed to return the device, pack it with care. Damage that occurs in return shipping is not covered by warranty.

Contact Us

Banner Engineering Corp. | 9714 Tenth Avenue North | Plymouth, MN 55441, USA | Phone: + 1 888 373 6767

For worldwide locations and local representatives, visit www.bannerengineering.com.

© Banner Engineering Corp. All rights reserved.
www.bannerengineering.com

Banner Engineering Corp Limited Warranty

Banner Engineering Corp. warrants its products to be free from defects in material and workmanship for one year following the date of shipment. Banner Engineering Corp. will repair or replace, free of charge, any product of its manufacture which, at the time it is returned to the factory, is found to have been defective during the warranty period. This warranty does not cover damage or liability for misuse, abuse, or the improper application or installation of the Banner product.

THIS LIMITED WARRANTY IS EXCLUSIVE AND IN LIEU OF ALL OTHER WARRANTIES WHETHER EXPRESS OR IMPLIED (INCLUDING, WITHOUT LIMITATION, ANY WARRANTY OF MERCHANTABILITY OR FITNESS FOR A PARTICULAR PURPOSE), AND WHETHER ARISING UNDER COURSE OF PERFORMANCE, COURSE OF DEALING OR TRADE USAGE.

This Warranty is exclusive and limited to repair or, at the discretion of Banner Engineering Corp., replacement. **IN NO EVENT SHALL BANNER ENGINEERING CORP. BE LIABLE TO BUYER OR ANY OTHER PERSON OR ENTITY FOR ANY EXTRA COSTS, EXPENSES, LOSSES, LOSS OF PROFITS, OR ANY INCIDENTAL, CONSEQUENTIAL OR SPECIAL DAMAGES RESULTING FROM ANY PRODUCT DEFECT OR FROM THE USE OR INABILITY TO USE THE PRODUCT, WHETHER ARISING IN CONTRACT OR WARRANTY, STATUTE, TORT, STRICT LIABILITY, NEGLIGENCE, OR OTHERWISE.**

Banner Engineering Corp. reserves the right to change, modify or improve the design of the product without assuming any obligations or liabilities relating to any product previously manufactured by Banner Engineering Corp. Any misuse, abuse, or improper application or installation of this product or use of the product for personal protection applications when the product is identified as not intended for such purposes will void the product warranty. Any modifications to this product without prior express approval by Banner Engineering Corp will void the product warranties. All specifications published in this document are subject to change; Banner reserves the right to modify product specifications or update documentation at any time. Specifications and product information in English supersede that which is provided in any other language. For the most recent version of any documentation, refer to: www.bannerengineering.com.

For patent information, see www.bannerengineering.com/patents.

© Banner Engineering Corp. All rights reserved.

LinkedIn

X

Facebook

Instagram



© 2026. All rights reserved.
www.bannerengineering.com