

ES-UA-5A and ES-VA-5A E-Stop Safety Module

Original Instructions
p/n: 122365 Rev. J
15-Jan-26
© Banner Engineering Corp. All rights reserved. www.bannerengineering.com

ПРОМЭЛЕКТРОНИКА/ sales@prom-elec.com

Contents

Chapter 1 Features and Models 3
Important: Read This First 3
Applicable U.S. Standards 3
Applicable International Standards 4
Specifications 4
Dimensions 5

Chapter 2 Overview 7
Safety Circuit Integrity and EN ISO 13849-1 Safety Circuit Principles 7
Safety Circuit Integrity Levels 7
Fault Exclusion 8
Monitoring of Safety Devices 8
Emergency Stop Push Buttons and Rope/Cable Pull Switches 8
Interlocked Guards (Gates) 9

Chapter 3 Mechanical Installation 10
Remove or Install a Terminal Block 10

Chapter 4 Electrical Installation 11
Safety Input Device Wiring Options 11
Connection of Multiple Switches 12
Connection of Safety Switches 13
Connection of Reset Switch 13
Automatic Reset Mode 14
Connection to the Machine to be Controlled 14
External Device Monitoring 14
Wiring Diagrams 15
Overvoltage Category II and III Installations (EN 50178 and IEC 60664-1) 17
Auxiliary Monitor Contact/Solid-State Monitor Outputs Connection 17

Chapter 5 Initial Checkout Procedure 18
Periodic Checkout Procedure 18

Chapter 6 Product Support and Maintenance 20
Troubleshooting 20
Repairs 21
EU Declaration of Conformity (DoC) 22
Banner Engineering Corp Limited Warranty 22

© Banner Engineering Corp. All rights reserved. www.bannerengineering.com

Chapter Contents

Important: Read This First 3
Specifications 4

Chapter 1 Features and Models

Model ES-UA-5A is for 12 to 24 V DC/115 AC operation; model ES-VA-5A is for 12 to 24 V DC/230 AC operation



- Monitors emergency stop devices, such as palm buttons and rope/cable pulls, and positive-opening safety switches used for guard/gate interlocking
- The safety inputs can monitor:
  - Hard/relay contacts in a dual-channel hookup using terminals S11-S12 and S21-S22, or
  - A +24 V DC source switched by hard/relay contacts in a single-channel connection
- Four normally open output switching channels for connection to control-reliable power interrupt circuits and three auxiliary output channels
- Automatic reset or monitored manual reset
- Design complies with standards ANSI B11.19, UL991, ISO 13850 (EN418), and ISO 13849-1 (Safety Category 4 PLe)
- For use in functional stop category 0 applications per NFPA 79 and IEC/EN60204-1
- 6 amp safety output contacts; 5 amp aux. output contacts
- Plug-in terminal blocks

Models	Supply Voltage	Outputs	Output Rating
ES-UA-5A	12 to 24 V DC or 115 V AC	Four normally open safety outputs	Normally open safety outputs: 6 A
ES-VA-5A	12 to 24 V DC or 230 V AC	One normally closed auxiliary output	Normally closed auxiliary outputs: 5 A
		Two solid-state auxiliary outputs	Solid-state auxiliary outputs: 100 mA

WARNING:

- **Not a stand-alone safeguarding device**
- Failure to properly safeguard hazards according to a risk assessment, local regulations, and applicable standards might lead to serious injury or death.
- This Banner Engineering Corp. device is considered complementary equipment that is used to augment safeguarding that limits or eliminates an individual's exposure to a hazard without action by the individual or others.

Important: Read This First

The user is responsible for satisfying all local, state, and national laws, rules, codes, and regulations relating to the use of this product and its application. Banner Engineering Corp. has made every effort to provide complete application, installation, operation, and maintenance instructions. Please contact a Banner Applications Engineer with any questions regarding this product.

The user is responsible for making sure that all machine operators, maintenance personnel, electricians, and supervisors are thoroughly familiar with and understand all instructions regarding the installation, maintenance, and use of this product, and with the machinery it controls. The user and any personnel involved with the installation and use of this product must be thoroughly familiar with all applicable standards, some of which are listed within the specifications. Banner Engineering Corp. makes no claim regarding a specific recommendation of any organization, the accuracy or effectiveness of any information provided, or the appropriateness of the provided information for a specific application.

Applicable U.S. Standards

ANSI B11 Standards for Machine Tools Safety

ANSI B11.19 Performance Requirements for Risk Reduction Measures: Safeguarding and Other Means of Reducing Risk

© Banner Engineering Corp. All rights reserved.
www.bannerengineering.com

NFPA 79 Electrical Standard for Industrial Machinery

ANSI/RIA R15.06 Safety Requirements for Industrial Robots and Robot Systems

Applicable International Standards

ISO 12100 Safety of Machinery – General Principles for Design – Risk Assessment and Risk Reduction

EN 60204-1 Electrical Equipment of Machines Part 1: General Requirements

IEC 61508 Functional Safety of Electrical/Electronic/Programmable Electronic Safety-Related Systems

IEC 62061 Safety of Machinery – Functional Safety of Safety-Related Control Systems

ISO 13849-1 Safety of Machinery – Safety-Related Parts of Control Systems – Part 1: General Principles for Design

ISO 13850 Emergency Stop Devices, Functional Aspects – Principles for Design

Specifications

Supply Voltage and Current

AI-A2: 115 V AC (model ES-UA-5A) or 230 V ac (model ES-VA-5A) ±15% , 50/60 Hz

BI-B2: 11 V DC to 27.6 V DC

Power consumption: approx. 4 W/7 VA

The Safety Module should be connected only to a SELV (safety extra-low voltage, for circuits without earth ground) or a PELV (protected extra-low voltage, for circuits with earth ground) power supply.

Supply Protection Circuitry

Protected against transient voltages and reverse polarity

Overvoltage Category

Output relay contact voltage of 1 V to 150 V AC/DC: category III

Output relay contact voltage of 151 V to 250 V AC/DC: category III, if appropriate overvoltage reduction is provided (see Overvoltage Category III Installations).

Pollution Degree

2

Required Overcurrent Protection

WARNING: Electrical connections must be made by qualified personnel in accordance with local and national electrical codes and regulations.

Overcurrent protection is required to be provided by end product application per the supplied table.

Overcurrent protection may be provided with external fusing or via Current Limiting, Class 2 Power Supply.

Supply wiring leads < 24 AWG shall not be spliced.

For additional product support, go to www.bannerengineering.com.

Supply Wiring (AWG)	Required Overcurrent Protection (A)	Supply Wiring (AWG)	Required Overcurrent Protection (A)
20	5.0	26	1.0
22	3.0	28	0.8
24	2.0	30	0.5

Relay Outputs

4 normally open (N.O.) output channels and 1 normally closed (N.C.) auxiliary output

Contacts: AgNi, 5 µm gold-plated

Each normally open output channel is a series connection of contacts from two forced-guided (mechanically linked) relays, K1-K2. The normally closed Aux. output channel is a parallel connection of contacts from two forced-guided relays, K1-K2.

Low Current Rating: The 5 µm gold-plated contacts allow the switching of low current/low voltage. In these low-power applications, multiple contacts can also be switched in series (for example, “dry switching”). To preserve the gold plating on the contacts, do not exceed the following maximum values at any time:

	Min.	Max.
Voltage	1 V AC/DC	60 V
Current	5 mA AC/DC	300 mA
Power	5 mW (5 mVA)	7 W (7 VA)

High Current Rating: If higher loads must be switched through one or more of the contacts, the minimum and maximum values of the contact(s) changes to:

		Minimum	Maximum
c UL us IND. CONT. EQ. 447Y LISTED	Voltage	15 V AC/DC	N.O. Safety Contacts (13-14, 23-24, 33-34, 43-44): 250 V AC / 24 V DC, 6 A resistive B300, Q300 (UL508)
	Current	250 mA AC/ DC	
	Power	5 W (5 VA)	N.C. Auxiliary Contact (51-52): 250 V AC/ 24 V DC, 5 A resistive B300, Q300 (UL508)

© Banner Engineering Corp. All rights reserved.

		Minimum	Maximum — IEC60947-5-1
CE	Voltage	15V AC/DC	N.O. Safety Contacts:
	Current	250 mA AC/ DC	AC-1: 250 V AC, 6 A; DC-1: 24 V DC, 6 A
	Power	5 W (5 VA)	AC-15: 230 V AC, 3 A; DC-13: 24 V DC, 4 A
			N.C. Auxiliary Contact:
			AC-1: 250 V AC, 5 A; DC-1: 24 V DC, 5 A
			AC-15: 230 V AC, 2 A; DC-13: 24 V DC, 4 A

Relay Outputs Mechanical Life

> 50,000,000 operations

NOTE: Transient suppression is recommended when switching inductive loads. Install suppressors across load. Never install suppressors across output contacts (see Warning, Wiring of Arc Suppressors).

Relay Outputs Electrical Life

150,000 cycles at 1500 VA

1,000,000 cycles at 450 VA

2,000,000 cycles at 250 VA

5,000,000 cycles at 125 VA

Solid-State Outputs

Two non-safety solid-state DC outputs

Output circuits require an application of +12 to 24 V DC ± 15% at terminal Y31; DC common at Y30.

Maximum switching current: 100 mA at 12 to 24 V DC

Both outputs are protected against short circuits.

Output at Y32 monitors the state of the outputs – conducts (output high) when both K1 and K2 are energized. Output at Y35 conducts (output high) when in normal operation (no lockout).

Output Response Time

35 ms maximum (25 ms typical)

Input Requirements

E-stop switch: must have normally closed contacts, each capable of switching 20 to 50 mA at 12 to 30 V DC; and must be open longer than 15 ms for a valid stop command.

Maximum input resistance 250 ohms per channel at 24 V DC supply voltage.

Maximum input resistance 25 ohms per channel at 12 V DC supply voltage.

Reset switch: must have one normally open contact capable of switching 20 to 50 mA at 12 to 30 V DC.

OFF-State Recovery Time

350 ms maximum

Indicators

Three green LED indicators: Power ON , Channel 1, Channel 2

One red LED indicator: indicates a fault condition (see"ES-xA-5A Troubleshooting" on page 20)

Construction

Polycarbonate housing. Rated NEMA 1, IEC IP20

Terminal Torque

0.8 N·m (7 lb-in)

Maximum Wire Cross-Section for Connection

Each 1 × 2.5 mm^2 stranded ferruled

Each 1 × 4 mm^2 solid

Each 2 × 1.5 mm^2 stranded ferruled

Mounting

Mounts to standard 35 mm DIN rail track. Safety Module must be installed inside an enclosure rated NEMA 3 (IEC IP54), or better.

Vibration Resistance

10 to 60 Hz at 0.35 mm peak displacement per UL 991

60 to 150 Hz at 5 g max.

Environment

0 °C to +50 °C (+32 °F to +122 °F), (surrounding air)

90% at +50 °C maximum relative humidity (non-condensing)

Safety Rating

ISO 13849-1 Cat 4, PLe

IEC 61508 SIL3

SFF: 90%/90%

$MTTF_d$: High

DC ≥ 99% (High)

PFH: $5.8x10^{-8}$ 1/h

PFD_{avg}: $3x10^{-5}$

Proof test interval: 1 year

Certifications

CE Banner Engineering BV
Park Lane, Culliganlaan 2F bus 3
1831 Diegem, BELGIUM

UL LISTED EMERGENCY STOP DEVICE 29YL

c UL us LISTED IND. CONT. EQ. 447Y

Dimensions

All measurements are listed in millimeters [inches], unless noted otherwise. The measurements provided are subject to change.

© Banner Engineering Corp. All rights reserved.
www.bannerengineering.com

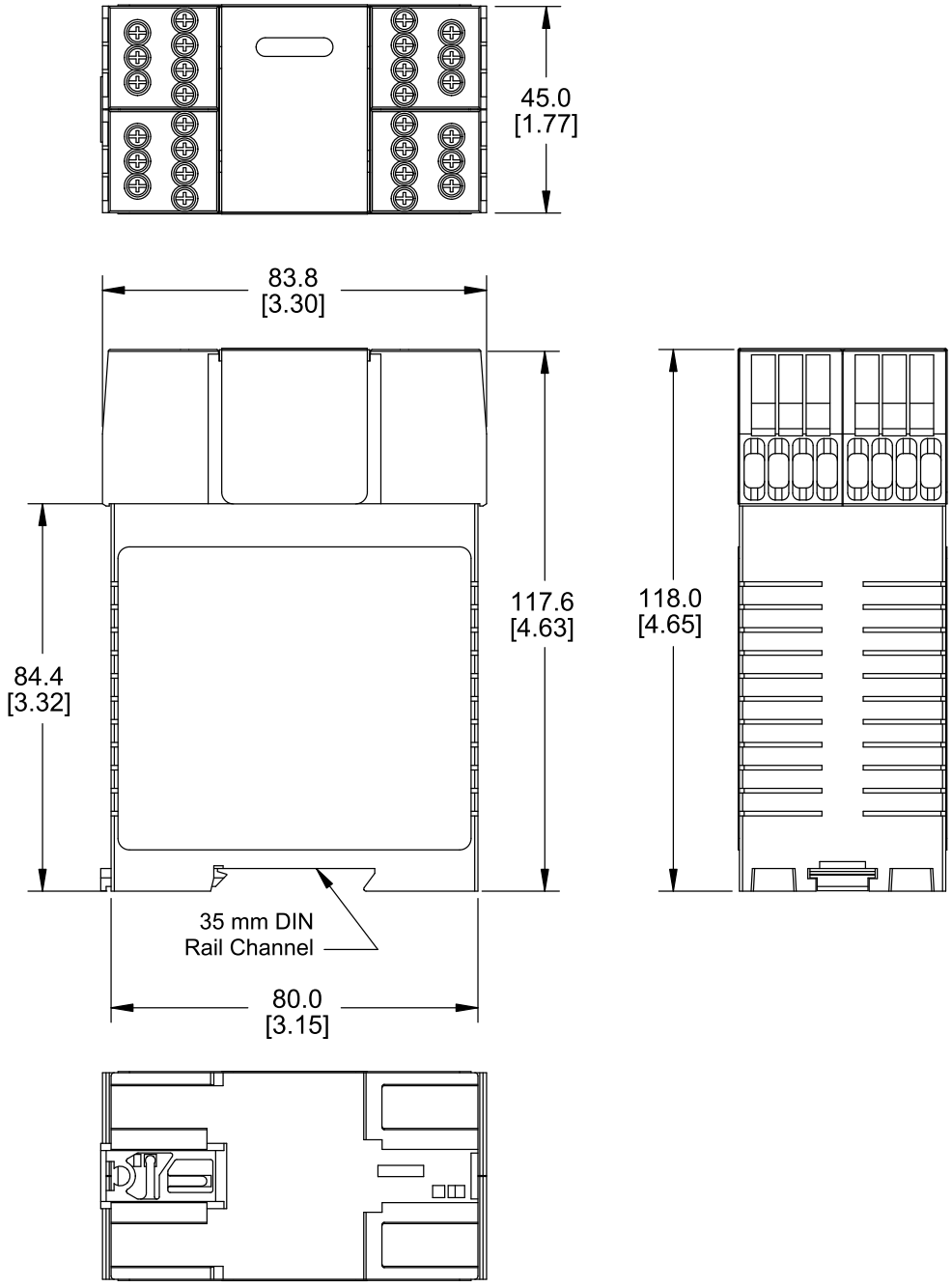

© Banner Engineering Corp. All rights reserved.
www.bannerengineering.com

Chapter Contents

Safety Circuit Integrity and EN ISO 13849-1 Safety Circuit Principles 7
Safety Circuit Integrity Levels 7
Fault Exclusion 8
Monitoring of Safety Devices 8
Emergency Stop Push Buttons and Rope/Cable Pull Switches 8
Interlocked Guards (Gates) 9

Chapter 2 Overview

An Emergency Stop Safety Module is used to increase the control reliability of an emergency stop circuit.

As shown in the wiring drawings, the models ES-UA-5A and ES-VA-5A E-Stop Safety Modules (the Safety Modules) are designed to monitor a 1-channel or 2-channel E-stop switch.

A 2-channel E-stop switch has two electrically isolated contacts.

Features and Terminals

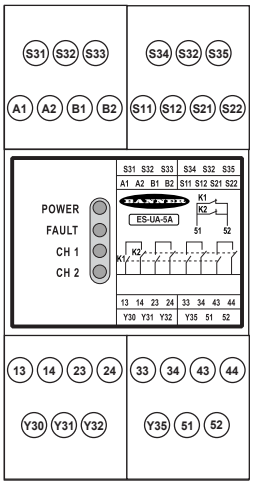

Safety Circuit Integrity and EN ISO 13849-1 Safety Circuit Principles

Safety circuits involve the safety-related functions of a machine that minimize the level of risk of harm. These safety-related functions can prevent initiation, or they can stop or remove a hazard. The failure of a safety-related function or its associated safety circuit usually results in an increased risk of harm.

The integrity of a safety circuit depends on several factors, including fault tolerance, risk reduction, reliable and well-tried components, well-tried safety principles, and other design considerations.

Depending on the level of risk associated with the machine or its operation, an appropriate level of safety circuit integrity (performance) must be incorporated into its design. Standards that detail safety performance levels include ANSI B11.19 Performance Criteria for Safeguarding and EN ISO 13849-1 Safety-Related Parts of a Control System.

Safety Circuit Integrity Levels

The safety circuits in International and European standards have been segmented into categories, depending on their ability to maintain their integrity in the event of a failure. The most recognized standard that details safety circuit integrity levels is ISO 13849-1, which establishes five levels: Categories B, 1, 2, 3, and 4 (most strict).

In the United States, the typical level of safety circuit integrity is called *control reliability*. Control reliability typically incorporates redundant control and self-checking circuitry and is relatively similar to ISO 13849-1 Categories 3 and 4 (see CSA Z432 and ANSI B11.19).

Perform a risk assessment to determine the appropriate category to make sure that the expected risk reduction is achieved to implement the requirements described by ISO 13849-1. This risk assessment must also take into account the national

© Banner Engineering Corp. All rights reserved.

regulations, such as U.S. control reliability or European "C" level standards, to comply with the mandated minimum levels of performance.

WARNING:
- **Determine the safety category**
- The design and installation of the safety devices and the means of interfacing of those devices could greatly affect the level of safety circuit integrity.
- Perform a risk assessment to determine the appropriate safety circuit integrity level or safety category, as described by ISO 13849-1, to ensure that the expected risk reduction is achieved and that all applicable regulations and standards are met.

Fault Exclusion

An important concept within the category requirements of EN ISO 13849-1 is the probability of the occurrence of the failure, which can be decreased using the "fault exclusion" method. This method assumes that the possibility of certain well-defined failure(s) can be reduced to a point where the resulting fault(s) can be disregarded.

Fault exclusion is a tool a designer can use during the development of the safety-related part of the control system and the risk assessment process. It allows the designer to eliminate the possibility of various failures and justify it through the risk assessment process to meet the requirements of Categories 2, 3, or 4. See EN ISO 13849-1/-2 for further information.

Monitoring of Safety Devices

Requirements vary widely for the level of control reliability or safety category per ISO 13849-1 in safety applications. While Banner Engineering always recommends the highest level of safety in any application, it is the responsibility of the user to safely install, operate and maintain each safety system and comply with all relevant laws and regulations.

Although only a few applications are listed, the Module can monitor a variety of devices as long as the input requirements are complied with (see Electrical Installation and Specifications). The Safety Module does not have 500 ms simultaneity between inputs and thus cannot be used for monitoring a two-hand control. In all cases, the safety performance (integrity) must reduce the risk from identified hazards as determined by the machine's risk assessment.

WARNING:
- **Do not mute or bypass any emergency stop device**
- Muting or bypassing the safety outputs renders the emergency stop function ineffective.
- ANSI B11.19, NFPA 79 and IEC/EN 60204-1 require that the emergency stop function remains active at all times.

Emergency Stop Push Buttons and Rope/Cable Pull Switches

The safety inputs can be interfaced with positive-opening switches to monitor an emergency-stop (E-stop) push button or rope/cable pull. The switch must provide one or two contacts for safety which are closed when the switch is armed. Once activated, the E-stop switch must open all its safety-rated contacts, and must require a deliberate action (such as twisting, pulling, or unlocking) to return to the closed-contact, armed position. The switch must be a "positive-opening" (or direct-opening) type, as described by IEC 60947-5-1.

Standards NFPA 79, ANSI B11.19, IEC/EN 60204-1, and ISO 13850 specify additional emergency stop switch device requirements, including the following:

- Emergency-stop push buttons shall be located at each operator control station and at other operating stations where emergency shutdown is required.
- Stop and emergency-stop push buttons shall be continuously operable and readily accessible from all control and operating stations where located. Do not mute or bypass E-stop buttons or rope/cable pulls.
- Actuators of emergency-stop devices shall be colored red. The background immediately around the device actuator shall be colored yellow (where possible). The actuator of a push-button-operated device shall be of the palm or mushroom-head type.
- The emergency-stop actuator shall be a self-latching type.

© Banner Engineering Corp. All rights reserved.

In addition, for Rope/Cable Pull Installations Only:

- The wire rope should be easily visible and readily accessible along its entire length. Red markers or flags may be fixed on the rope to increase its visibility.
- The rope or cable pull must provide constant tension and must have the capability to react to a force in any direction.
- Mounting points, including support points, must be rigid.
- The rope should be free of friction at all supports. Pulleys are recommended.
- The switch must have a self-latching function that requires a manual reset after actuation

Some applications may have additional requirements; comply with all relevant regulations. See the device manufacturer's installation instructions for complete information.

WARNING:

- **Do not mute or bypass any emergency stop device**
- Muting or bypassing the safety outputs renders the emergency stop function ineffective.
- ANSI B11.19, NFPA 79 and IEC/EN 60204-1 require that the emergency stop function remains active at all times.

Interlocked Guards (Gates)

The safety inputs can be interfaced with positive-opening safety switches to monitor the position of an interlock guard or gate. Each switch must provide electrically isolated contacts: at minimum, one normally closed (N.C.) contact from each individually mounted switch. The contacts must be of "positive-opening" (direct-opening) design, as described by IEC60947-5-1, with one or more normally closed contacts rated for safety. In addition, the switches must be mounted in a "positive mode," to move/disengage the actuator from its home position and open the normally closed contact when the guard opens.

The design and installation of the interlocked guard and the safety switches should comply with ANSI B11.19, ISO14119, ISO 14120, and/or other applicable standards. See the device manufacturer installation instructions for complete information.

In higher levels of safety performance, the design of a dual-channel coded magnetic switch typically uses complementary switching, in which one channel is open and one channel is closed at all times. The inputs of the Safety Module **do not support complementary switching**, and thus should not be used with coded magnetic safety switches.

© Banner Engineering Corp. All rights reserved.
www.bannerengineering.com

Chapter Contents

Remove or Install a Terminal Block 10

Chapter 3 Mechanical Installation

The ES-xA-5A E-Stop Safety Module must be installed inside an enclosure.

It is not designed for exposed wiring. It is the user's responsibility to house the ES-xA-5A E-Stop Safety Module in an enclosure with NEMA 3 (IEC IP54) rating, or better. The ES-xA-5A E-Stop Safety Module mounts directly to standard 35 mm DIN rail.

Heat Dissipation Considerations: For reliable operation, ensure that the operating specifications are not exceeded. The enclosure must provide adequate heat dissipation so that the air closely surrounding the ES-xA-5A E-Stop Safety Module does not exceed the maximum operating temperature stated in the Specifications. Methods to reduce heat build-up include venting, forced airflow (for example, exhaust fans), adequate enclosure exterior surface area, and spacing between modules and other heat sources.

Remove or Install a Terminal Block

To remove a terminal block:

1. Insert a small screwdriver into the slot between the cover label and the terminal block.
2. Using the screwdriver, pry to loosen the terminal block.
3. Slide the terminal block out from the face of the module.

To reinsert the terminal block:

1. Carefully slide the dovetail on the terminal block into the slot on the housing.
2. Press on the terminal block until it is fully seated. A "click" should be heard when the terminal block is properly installed.

Remove the Terminal Block

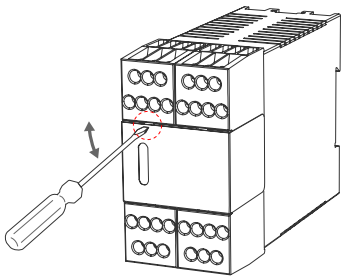

© Banner Engineering Corp. All rights reserved.
www.bannerengineering.com

Chapter Contents

Safety Input Device Wiring Options....11
Connection of Multiple Switches....12
Connection of Safety Switches....13
Connection of Reset Switch....13
Automatic Reset Mode....14
Connection to the Machine to be Controlled....14
External Device Monitoring....14
Wiring Diagrams....15
Overvoltage Category II and III Installations (EN 50178 and IEC 60664-1)....17
Auxiliary Monitor Contact/Solid-State Monitor Outputs Connection....17

Chapter 4 Electrical Installation

WARNING:

- **Risk of electric shock**
- Use extreme caution to avoid electrical shock. Serious injury or death could result.
- Always disconnect power from the safety system (for example, device, module, interfacing, etc.), guarded machine, and/or the machine being controlled before making any connections or replacing any component. Lockout/tagout procedures might be required. Refer to OSHA 29CFR1910.147, ANSI Z244-1, or the applicable standard for controlling hazardous energy.
- Make no more connections to the device or system than are described in this manual. Electrical installation and wiring must be made by a Qualified Person[1] and must comply with the applicable electrical standards and wiring codes, such as the NEC (National Electrical Code), NFPA 79, or IEC 60204-1, and all applicable local standards and codes.

It is not possible to give exact wiring instructions for a Safety Module that interfaces to a multitude of machine control configurations. The following guidelines are general in nature.

The Safety Module has no delay function. Its output relay contacts open within **25 milliseconds** after a safety input opens. This classifies the Safety Module as a functional stop "Category 0" control, as defined by NFPA 79 and IEC/EN 60204-1.

The Safety Module is powered by either a 12-24 V DC supply at 4 W or an AC supply (115 V AC, model **ES-UA-5A**, or 230 V AC, model **ES-VA-5A**) at 7 VA. The safety inputs can be connected to:

- A +24 V DC source that is switched by a hard/relay contact in a single-channel wiring configuration, or
- Hard/relay contacts in a dual-channel wiring configuration using terminals S11-S12 and S21-S22.

Safety Input Device Wiring Options

The operation of all dual-channel wiring options is concurrent, meaning that input channel 1 and input channel 2 must be in the same state in both the STOP and RUN condition, but with no simultaneity (timing) requirement between the channels.

The **dual-channel wiring configuration** is able to detect certain failures and faults, such as short circuits, that could result in a loss of the safety function. Once such a failure or fault is detected, the Safety Module will turn OFF (open) its safety outputs until the problem is fixed. This circuit can meet ISO 13849-1 Category 2, 3, or 4 requirements, depending on the safety rating and the installation of the safety input device. This circuit can detect a short circuit between channels or to another source of power, at a minimum, when the device is actuated.

A single device with redundant outputs that can fail in such a manner to lose the safety function, such as a single safety interlocking switch, can typically meet only a Category 2. See below for means to eliminate or minimize the possibility of failures and faults that could result in the loss of the safety function(s).

The **single-channel wiring configuration** cannot detect short circuits to secondary sources of +24 V DC or detect the loss of the switching function of the safety input device (that is, it is not redundant) and thus this circuit typically can meet only ISO 13849-1 Category 2.

[1] A person who, by possession of a recognized degree or certificate of professional training, or who, by extensive knowledge, training and experience, has successfully demonstrated the ability to solve problems relating to the subject matter and work.

© Banner Engineering Corp. All rights reserved.

It is recommended that in all circumstances the installation of the Safety Module and its associated safety input devices are installed to eliminate or minimize the possibility of failures and faults that could result in the loss of the safety function(s). Methods to eliminate or minimize the possibility of these failures include, but are not limited to:

- Physically separating interconnecting control wires from each other and from secondary sources of power.
- Routing interconnecting control wires in separate conduit, runs, or channels.
- Locating all elements (modules, switches, and devices under control) within one control panel, adjacent to each other, and directly connected with short wires.
- Properly installing multi-conductor cabling and multiple wires through strain-relief fittings. (Over-tightening of a strain-relief can cause short circuits at that point.)
- Using positive-opening components as described by IEC 60947-5-1 that are installed and mounted in a positive mode.
- Periodically checking the functional integrity/safety function and training operators, maintenance personnel, and others associated with the operation of the machine to recognize and immediately correct such failures.

If you have any questions about your intended use, please contact a Banner applications engineer.

Connection of Multiple Switches

Connect the poles of multiple switches, such as E-Stop switches, as shown in the following hookup figures. The switches are shown in the "armed" position with both contacts closed. Multiple switches connected to one Safety Module must be series-connected.

Series connection of multiple E-stop switches

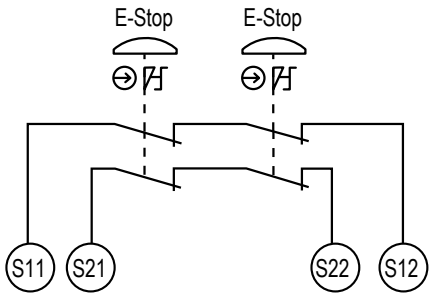

WARNING:

- **Test multiple safety devices individually**
- Failure to test each safety device individually could result in undetected faults and create an unsafe condition that could result in serious injury or death.
- When two or more safety devices are used, individually actuate each device, causing a stop or open-contact condition, then reset/rearm the safety module (if using manual reset mode). This allows the monitoring circuits to check each device and its wiring to detect faults.

NOTE: The minimum amount of time for the Module to detect a STOP condition is 15 milliseconds. This "recovery time" (OFF state) is required for the internal integrity tests to complete, allowing a reliable reset to occur. A lockout may occur if the Module is cycled too quickly. To clear the lockout, the inputs must be re-cycled, meeting the minimum recovery time requirements.

© Banner Engineering Corp. All rights reserved.

Connection of Safety Switches

Wiring using contacts from two safety switches

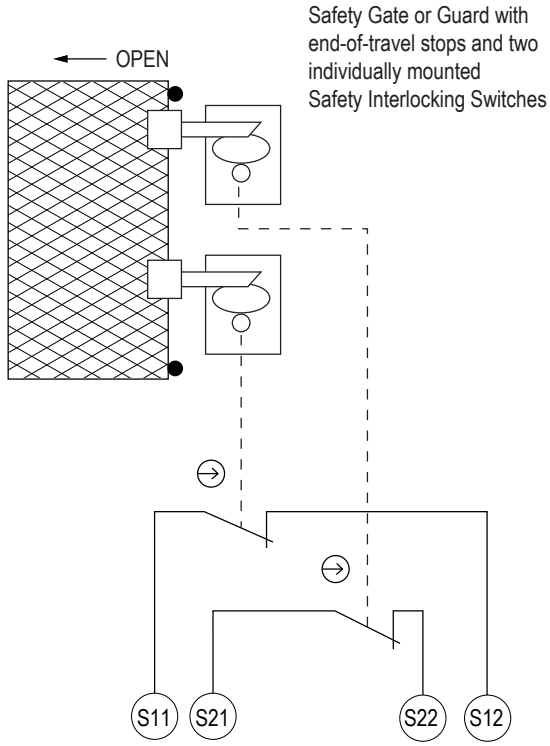

The Safety Module may be used to monitor safety interlocking switches that determine the position of a guard or gate. To achieve Category 4 operation per ISO 13849-1, two positive-opening safety switches must operate concurrently when the guard or gate is opened.

The Safety Module verifies concurrent opening of two contacts – one from each safety switch. Reset of the Safety Module is not possible if one switch fails to open or if a short circuit between the safety interlocking switches occurs.

A switch with a PNP (sourcing) output can be used to reset the module. The PNP output would supply 24 V DC to S34.

Connection of Reset Switch

The reset circuit switch can be any mechanical switch, such as a normally open momentary switch, or a two-position key switch. The reset switch must be capable of reliably switching 12 to 30 V DC at 20 to 50 mA. As shown in the wiring diagrams, the reset switch connects between Safety Module terminals S33 and S34.

The reset switch must be located outside of – and not be accessible from – the area of dangerous motion, and must be positioned so that any area of dangerous motion may be observed by the switch operator during the reset procedure. See warning below.

WARNING:

- **Install reset switches properly**
- Failure to properly install reset switches could result in serious injury or death.
- Install reset switches so that they are accessible only from outside, and in full view of, the safeguarded space. Reset switches cannot be accessible from within the safeguarded space. Protect reset switches against unauthorized or inadvertent operation (for example, through the use of rings or guards). If there are any hazardous areas that are not visible from the reset switches, provide additional safeguarding.

© Banner Engineering Corp. All rights reserved.
www.bannerengineering.com

Automatic Reset Mode

The Safety Module may be configured (via hookup) for automatic reset. Leave terminals S33 and S34 open and install a jumper between terminals S32 and S35 (see hookups). The Safety Module will reset (and its outputs energize) as soon as the switch returns to its armed (closed-contact) position.

Automatic reset is useful for some automated processes. **However, if automatic reset is used, it is necessary to provide a means of preventing resumption of hazardous machine motion, until an alternate reset procedure is performed.** The alternate procedure must include a reset/restart switch, located outside the area of dangerous motion and positioned so that any area of dangerous motion may be observed by the switch operator during the reset procedure.

WARNING:

- **Reset routine required**
- Failure to prevent the machine from restarting without actuating the normal start command/device can create an unsafe condition that could result in serious injury or death.
- Do not allow the machine to restart without actuating the normal start command/device. Perform the reset routine after clearing the cause of a stop condition, as required by U.S. and international standards.

Connection to the Machine to be Controlled

The machine hookup diagram shows a generic connection of the Safety Module's redundant output circuits to the master stop control elements (MSCs). An MSC is defined as an electrically powered device, external to the Safety Module, which stops the machinery being controlled by immediately removing electrical power to the machine and (when necessary) by applying braking to dangerous motion. This stopping action is accomplished by removing power to the actuator of either MSC.

External Device Monitoring

To satisfy the requirements of Control Reliability (OSHA and ANSI), Category 3 and 4 of ISO 13849-1, the Machine Primary Control Elements (MPCEs) must each offer a normally closed, forced-guided (mechanically linked) monitor contact. Connect one normally closed monitor contact from each Machine Primary Control Element as shown in the appropriate hookup drawing (circuit between terminals S31 and S32, jumper if no MSC contacts are monitored).

In operation, if one of the switching contacts of either MPCE fails in the energized condition, the associated monitor contact will remain open. Therefore, it will not be possible to reset the Primary Safety Device. If no MPCE-monitor contacts are monitored, it is the user's responsibility to ensure that any single failure will not result in a hazardous condition and will prevent a successive machine cycle.

© Banner Engineering Corp. All rights reserved.

Wiring Diagrams

Wiring for 2-Channel E-Stop Applications

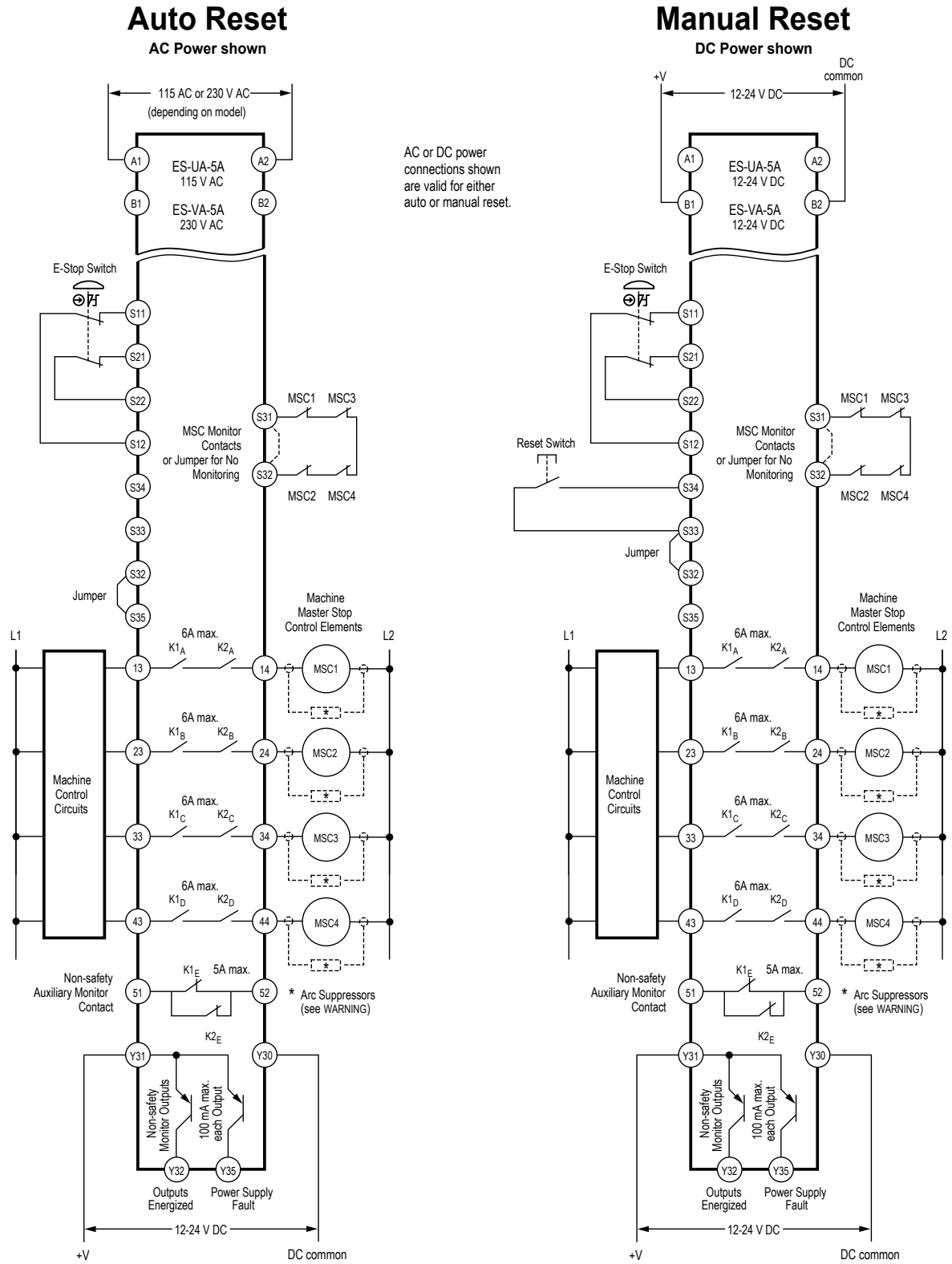

© Banner Engineering Corp. All rights reserved.
www.bannerengineering.com

Wiring for 1-Channel E-Stop Applications

Auto Reset

AC Power shown

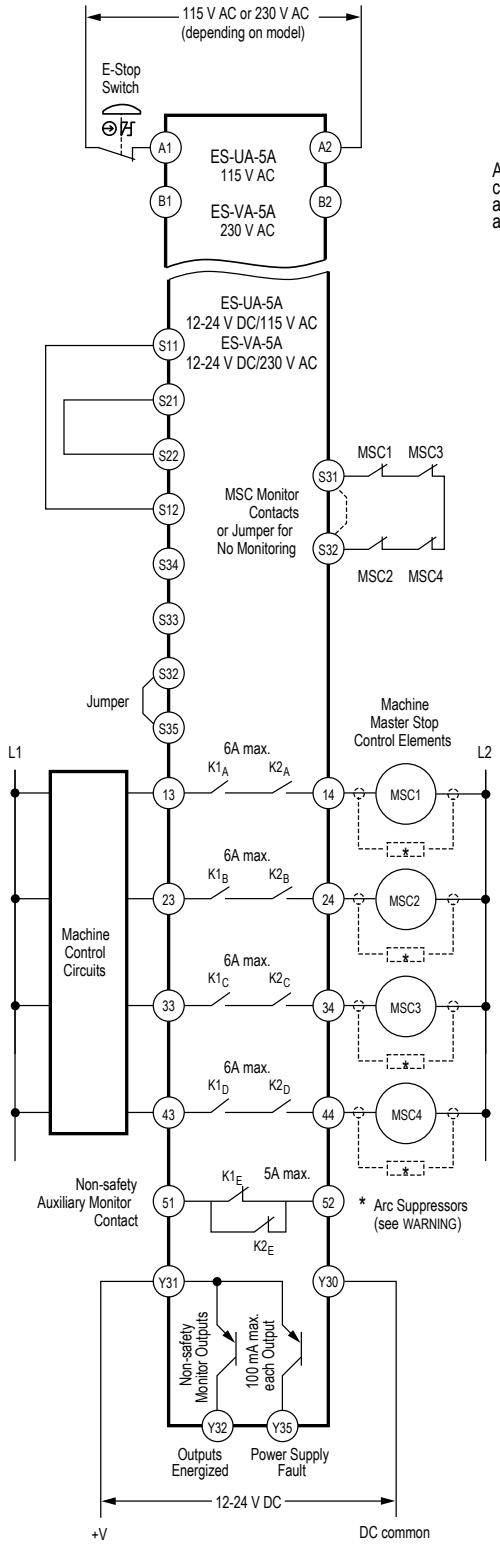

AC or DC power connections shown are valid for either auto or manual reset.

Manual Reset

DC Power shown

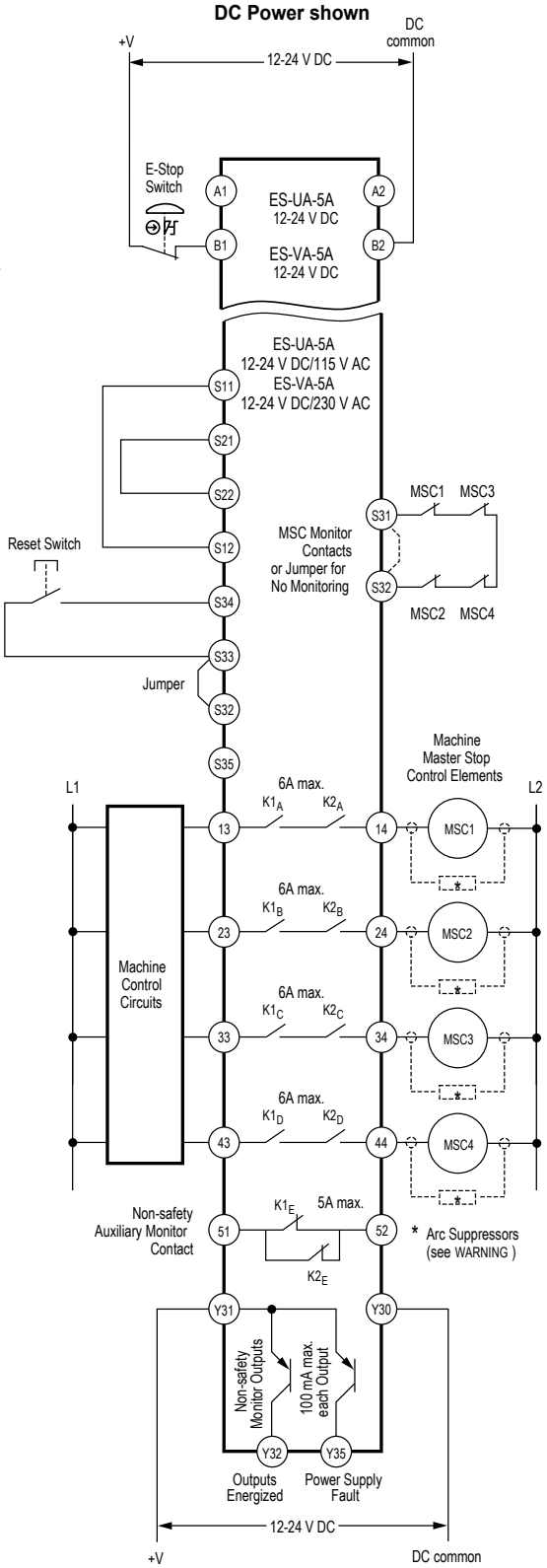

© Banner Engineering Corp. All rights reserved.
www.bannerengineering.com

WARNING:

- **Properly install arc or transient suppressors**
- Failure to follow these instructions could result in serious injury or death.
- Install any suppressors as shown across the coils of the machine primary control elements. Do not install suppressors directly across the output contacts of the safety or interface module. In such a configuration, it is possible for suppressors to fail as a short circuit.

WARNING:

- **Interfacing master stop controls**
- Failure to follow these instructions could result in serious injury or death.
- Unless the same degree of safety is maintained, never wire an intermediate device(s) (PLC, PES, PC) between the safety module outputs and the master stop control element it switches such that a failure causes a loss of the safety stop command or the failure allows the safety function to be suspended, overridden, or defeated.
- When forced-guided, mechanically linked relays are added as intermediate switching devices, a normally closed (N.C.) forced-guided monitor contact from each relay must be added to the series feedback loop or properly wired external device monitoring channel.

Overvoltage Category II and III Installations (EN 50178 and IEC 60664-1)

The ES-xA-5A E-Stop Safety Module is rated for Overvoltage Category III when voltages of 1 V to 150 V AC/DC are applied to the output relay contacts. It is rated for Overvoltage Category II when voltages of 151 V to 250 V AC/DC are applied to the output relay contacts and no additional precautions are taken to attenuate possible overvoltage situations in the supply voltage. The ES-xA-5A E-Stop Safety Module can be used in an Overvoltage Category III environment (with voltages of 151 V to 250 V AC/DC) if care is taken either to reduce the level of electrical disturbances seen by the ES-xA-5A E-Stop Safety Module to Overvoltage Category II levels by installing surge suppressor devices (for example, arc suppressors), or to install extra external insulation in order to isolate both the ES-xA-5A E-Stop Safety Module and the user from the higher voltage levels of a Category III environment.

For Overvoltage Category III installations with applied voltages from 151 V to 250 V AC/DC applied to the output contact(s): the ES-xA-5A E-Stop Safety Module may be used under the conditions of a higher overvoltage category where appropriate overvoltage reduction is provided. Appropriate methods include:

- An overvoltage protective device
- A transformer with isolated windings
- A distribution system with multiple branch circuits (capable of diverting energy of surges)
- A capacitance capable of absorbing energy of surges
- A resistance or similar damping device capable of dissipating the energy of surges

When switching inductive AC loads, it is good practice to protect the ES-xA-5A E-Stop Safety Module outputs by installing appropriately-sized arc suppressors. However, if arc suppressors are used, they must be installed across the load being switched (for example, across the coils of external safety relays), and never across the ES-xA-5A E-Stop Safety Module's output contacts.

Auxiliary Monitor Contact/Solid-State Monitor Outputs Connection

The action of the auxiliary monitor contact, terminals 51-52, inversely "follows" the action of the safety outputs. Two additional solid-state monitor outputs (at terminals Y32 and Y35) each are capable of switching up to 100 mA at 12- 24 V dc. The output at terminal Y32 follows the action of the output circuits (K1 and K2); the output at terminal Y35 opens (low signal) when there is a loss of power or a fault is detected. **These outputs are to be used only for nonsafety functions** (typically, to communicate the status of the Safety Module to a programmable logic controller). See the appropriate figure for wiring information.

© Banner Engineering Corp. All rights reserved.
www.bannerengineering.com

Chapter Contents

Periodic Checkout Procedure..... 18

Chapter 5 Initial Checkout Procedure

CAUTION:

- **Disconnect power prior to checkout**
- Dangerous voltages might be present along the module wiring barriers whenever power to the machine control elements is on.
- Before performing the initial checkout procedure, disconnect all power from the machine to be controlled. Exercise extreme caution whenever machine control power is or might be present. Always disconnect power to the machine control elements before opening the enclosure housing of the module.

1. Remove power from the machine primary control elements.
2. Ensure the safety device is in a STOP or "open-contact" state (for example, actuate the E-stop switch to open its contacts).
3. Apply power to the Safety Module at terminals A1 and A2 or B1 and B2.Verify that only the Input Power indicator is ON. If either input channel 1 or input channel 2 indicators are ON at this point, disconnect the input power and check all wiring. Return to step 2 after the cause of the problem has been corrected.
4. Reset or otherwise cause the safety device to reach an ON or "closed-contact" state (for example, arm the E-stop switch to close its contacts).
5. Manual Reset mode: Ch1 and Ch2 indicators should be flashing. Close and reopen the Reset switch.
6. Verify that the Ch1 and Ch2 indicators both come ON. If only one indicator comes ON or if any indicator is flashing, refer to the Troubleshooting section for more information. Return to step 2 after correcting the problem.
7. Cause the safety device to generate a STOP or "open-contact" state (for example, actuate the E-stop switch to open its contacts). The Ch1 and Ch2 indicators should turn OFF simultaneously. If either indicator remains ON, disconnect the input power and check all wiring. Return to step 2 after the cause of the problem has been corrected. Refer to the Troubleshooting section for more information.
8. If more than one safety device is series-connected to the Safety Module, run the above checkout procedure individually for EACH device.
9. Close and secure the enclosure in which the Safety Module is mounted. Apply power to the machine control elements and perform the Periodic Checkout Procedure.

WARNING:

- **Test multiple safety devices individually**
- Failure to test each safety device individually could result in undetected faults and create an unsafe condition that could result in serious injury or death.
- When two or more safety devices are used, individually actuate each device, causing a stop or open-contact condition, then reset/rearm the safety module (if using manual reset mode). This allows the monitoring circuits to check each device and its wiring to detect faults.

Periodic Checkout Procedure

The functioning of the Safety Module and the device(s) connected to it must be verified on a regular periodic basis to ensure proper operation (see also the machine manufacturer’s recommendations).

1. With the machine running, cause the safety device to generate a STOP or "open-contact" state (e.g., actuate the E-stop switch to open its contacts). Verify that the machine stops.
2. Reset or otherwise cause the safety device to reach an ON or "closed-contact" state. Verify that the machine does not restart.

© Banner Engineering Corp. All rights reserved.

3. If using manual reset mode, close and then open the reset switch within 2 seconds. Verify that the machine can be restarted by normal initiation.
4. If more than one safety device is series-connected to the Safety Module, run the above checkout procedure individually for EACH device.

© Banner Engineering Corp. All rights reserved.

Chapter Contents

Troubleshooting 20
Repairs 21
EU Declaration of Conformity (DoC) 22
Banner Engineering Corp Limited Warranty 22

Chapter 6 Product Support and Maintenance

Troubleshooting

Module will not reset

Indicator Status	Possible Causes and Solutions
Power LED ON Fault LED OFF Ch1 LED Flashing Ch2 LED Flashing	Waiting for manual reset: • EDM monitoring contacts are not closed. Check MSCs. • Check jumper at S32-S35 (auto reset) or S32-S33 (manual reset). • Check the reset button connection.

No fault indicated

Indicator Status	Possible Causes and Solutions
Power LED ON Fault LED OFF Ch1 LED OFF Ch2 LED OFF	E-stop button open: • Connector loose. • Re-arm the E-stop button.
Power LED ON Fault LED OFF Ch1 LED OFF Ch2 LED ON	Ch.1 open; Ch. 2 closed: • Check wiring to S11-S12. • Check the switch. • Check that the connectors are properly seated.
Power LED ON Fault LED OFF Ch1 LED ON Ch2 LED OFF	Ch.1 closed; Ch. 2 open: • Check wiring to S21-S22. • Check the switch. • Check that the connectors are properly seated.

Fault indicated

Indicator Status	Possible Causes and Solutions
Power LED ON Fault LED ON* Ch1 and Ch2 LED flashing alternately	Input concurrency fault: Both inputs did not open concurrently. Both inputs are now closed. • Check switches/wiring at both inputs. • Open both inputs to clear the fault.
Power LED ON Fault LED ON* Ch1 LED OFF Ch2 LED Flashing	Input concurrency fault: Ch1 opened and closed and is now open while Ch 2 remained closed. • Check switches/wiring at both inputs. • Open both inputs to clear the fault.

Continued on page 21

© Banner Engineering Corp. All rights reserved.
www.bannerengineering.com

Continued from page 20

Indicator Status	Possible Causes and Solutions
Power LED ON Fault LED ON* Ch1 LED Flashing Ch2 LED OFF	Input concurrency fault: Ch1 remained closed while Ch2 opened and closed and is now open. • Check switches/wiring at both inputs. • Open both inputs to clear the fault.
Power LED ON Fault LED ON* Ch1 LED ON Ch2 LED ON	Possible input fault: Ch1 and Ch 2 are closed and are (or were) shorted together. • Check wiring at both inputs. • Open both inputs to clear the fault. Possible internal fault: Return to factory for repair or replacement
All LEDs OFF	Possible fault in machine control or wiring to module: • Check input power connections or external fuses. • Check that the connectors are properly seated.
Dim LEDs	Dim Power LED: • Check the power supply capacity and load. Other LEDs dim: • May glow during power-up (normal). • Check the power supply load and capacity.
* Fault LED Flickers	This is normal while the Fault LED is ON.

MSCs do not energize

Indicator Status	Possible Causes and Solutions
Power LED ON Fault LED OFF Ch1 LED ON Ch2 LED ON	Possible fault in the machine control or an open circuit between machine control and MSCs: • Check continuity of safety outputs (e.g. between terminals 13 and 14). • Check control wires and connectors. • Check MSCs.

Repairs

Contact Banner Engineering for troubleshooting of this device. **Do not attempt any repairs to this Banner device; it contains no field-replaceable parts or components.** If the device, device part, or device component is determined to be defective by a Banner Applications Engineer, they will advise you of Banner's RMA (Return Merchandise Authorization) procedure.

Obtain assistance with product repairs by contacting your local Banner Engineering Corp distributor or by calling Banner directly at (763) 544-3164. Access literature translated into your native language on the Banner website at www.bannerengineering.com or contact Banner directly at (763) 544-3164.

Para reparaciones de productos, por favor contacte a su distribuidor local de Banner Engineering o llame a Banner directamente al 00 1 (763) 544-3164. Vea la literatura traducida en su idioma en el sitio web Banner en www.bannerengineering.com o comuníquese con Banner directamente al 00 1 (763) 544-3164.

Pour vous aider lors de la réparation de produits, contactez votre distributeur Banner local our appelez directement Banner au (763) 544-3164. La documentation traduite dans votre langue est disponible sur le site internet de Banner www.bannerengineering.com ou contactez directement Banner au (763) 544-3164.

请联系当地的 Banner Engineering Corp 经销商或直接致电 Banner +1 (763) 544-3164，以获得产品维修帮助。请访问邦纳网站 www.bannerengineering.com 或直接拨打 +1 (763) 544-3164 联系邦纳，获取翻译成您母语的资料。

제품 수리에 대한 지원은 지역 Banner Engineering Corp 대리점에 문의하거나 Banner에 직접 (763) 544-3164로 문의하실 수 있습니다. 사용자의 모국어로 번역된 자료는 Banner 웹사이트 www.bannerengineering.com에서 액세스하거나 Banner에 직접 (763) 544-3164로 문의하실 수 있습니다.

© Banner Engineering Corp. All rights reserved.
www.bannerengineering.com

IMPORTANT: If instructed to return the device, pack it with care. Damage that occurs in return shipping is not covered by warranty.

WARNING:

- **Do not abuse the module after failure**—If an internal fault has occurred and the module will not reset, do not tap, strike, or otherwise attempt to correct the fault with a physical impact to the housing.
- Failure to follow these instructions could result in serious injury or death.
- An internal relay might have failed in such a manner that its replacement is required. If the module is not immediately replaced or repaired, multiple simultaneous failures might accumulate such that the safety function cannot be guaranteed.

EU Declaration of Conformity (DoC)

Banner Engineering Corp. herewith declares that these products are in conformity with the provisions of the listed directives and all essential health and safety requirements have been met. For the complete DoC, please go to www.bannerengineering.com.

Product	Directive
ES-UA-5A and ES-VA-5A Emergency Stop Module for industrial control	EU: Machinery Directive 2006/42/EC

Representative in EU: Spiros Lachandidis, Managing Director, **Banner Engineering BV** Park Lane | Culliganlaan 2F bus 3 | 1831 Diegem, BELGIUM

Banner Engineering Corp Limited Warranty

Banner Engineering Corp. warrants its products to be free from defects in material and workmanship for one year following the date of shipment. Banner Engineering Corp. will repair or replace, free of charge, any product of its manufacture which, at the time it is returned to the factory, is found to have been defective during the warranty period. This warranty does not cover damage or liability for misuse, abuse, or the improper application or installation of the Banner product.

THIS LIMITED WARRANTY IS EXCLUSIVE AND IN LIEU OF ALL OTHER WARRANTIES WHETHER EXPRESS OR IMPLIED (INCLUDING, WITHOUT LIMITATION, ANY WARRANTY OF MERCHANTABILITY OR FITNESS FOR A PARTICULAR PURPOSE), AND WHETHER ARISING UNDER COURSE OF PERFORMANCE, COURSE OF DEALING OR TRADE USAGE.

This Warranty is exclusive and limited to repair or, at the discretion of Banner Engineering Corp., replacement. **IN NO EVENT SHALL BANNER ENGINEERING CORP. BE LIABLE TO BUYER OR ANY OTHER PERSON OR ENTITY FOR ANY EXTRA COSTS, EXPENSES, LOSSES, LOSS OF PROFITS, OR ANY INCIDENTAL, CONSEQUENTIAL OR SPECIAL DAMAGES RESULTING FROM ANY PRODUCT DEFECT OR FROM THE USE OR INABILITY TO USE THE PRODUCT, WHETHER ARISING IN CONTRACT OR WARRANTY, STATUTE, TORT, STRICT LIABILITY, NEGLIGENCE, OR OTHERWISE.**

Banner Engineering Corp. reserves the right to change, modify or improve the design of the product without assuming any obligations or liabilities relating to any product previously manufactured by Banner Engineering Corp. Any misuse, abuse, or improper application or installation of this product or use of the product for personal protection applications when the product is identified as not intended for such purposes will void the product warranty. Any modifications to this product without prior express approval by Banner Engineering Corp will void the product warranties. All specifications published in this document are subject to change; Banner reserves the right to modify product specifications or update documentation at any time. Specifications and product information in English supersede that which is provided in any other language. For the most recent version of any documentation, refer to: www.bannerengineering.com.

For patent information, see www.bannerengineering.com/patents.

© Banner Engineering Corp. All rights reserved.
www.bannerengineering.com

LinkedIn

X

Facebook

Instagram



© 2026. All rights reserved.