# QS18 Series Sensor Product Manual

Original Instructions
p/n: 197052 Rev. I
01-Jun-26
© Banner Engineering Corp. All rights reserved. www.bannerengineering.com

ПРОМЭЛЕКТРОНИКА/ sales@prom-elec.com

# Contents


## Chapter 1 Features ..... 3
Models ..... 3
Specifications ..... 9
FCC Part 15 Class A for Unintentional Radiators ..... 9
Industry Canada ICES-003(A) ..... 10
Dimensions ..... 10
Performance Curves ..... 11

## Chapter 2 Installation Instructions ..... 18
Wiring Diagrams ..... 18
Installing Fibers ..... 18
Cutting Unterminated Plastic Fibers ..... 18
Install the Plastic Fibers ..... 19
Install the Glass Fibers ..... 19
Mount the Device ..... 20

## Chapter 3 Operating Instructions ..... 21
Sensor Sensitivity Adjustment ..... 21

## Chapter 4 QS18 Accessories ..... 22
Cordsets ..... 22
Sensor Status Indicators ..... 23
QS18 Brackets ..... 23
Retroreflective Targets ..... 23
Plastic and Glass Fiber Optics ..... 23

## Chapter 5 Product Support and Maintenance ..... 24
Clean Sensor with Compressed Air Then Isopropyl Alcohol ..... 24
Repairs and Translations (No Field-Replaceable Parts) ..... 24
Discontinued Models ..... 26
Contact Us ..... 28
Banner Engineering Corp Limited Warranty ..... 28


© Banner Engineering Corp. All rights reserved. www.bannerengineering.com

Chapter Contents

Models ..... 3
Specifications ..... 9

# Chapter 1 Features

Miniature self-contained photoelectric sensor in a universal housing

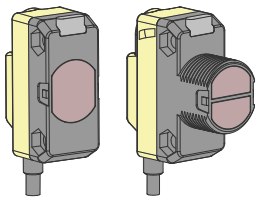

- Easily fits (or retrofits) almost any mounting situation
- Exceptional optical performance, comparable to larger “MINI-style” or barrel sensors
- 10 V DC to 30 V DC operation, with complementary (SPDT) NPN or PNP outputs, depending on model
- Bright LED operating status indicators are visible from 360°
- Rugged sealed housing, protected circuitry
- Models available with or without 18 mm threaded “nose”
- Less than 1-millisecond output response for excellent sensing repeatability
- Choose 2 m (6.5 ft), 9 m (30 ft), or 150 mm (6 in) cable with a M8 quick disconnect connector

**WARNING:**

- **Do not use this device for personnel protection**
- Using this device for personnel protection could result in serious injury or death.
- This device does not include the self-checking redundant circuitry necessary to allow its use in personnel safety applications. A device failure or malfunction can cause either an energized (on) or de-energized (off) output condition.

# Models

*Opposed mode models*

| Model | Effective Beam | Output | Connection |
|---|---|---|---|
| QS186EV (624 nm visible red) | Effective beam: 13 mm (0.5 inch)<br>Range: 20 m (66 ft) | — | 2 m (6.5 ft) cable |
| QS186EVQ | | — | 150 mm (6 in) cable with a 4-pin M8 quick disconnect (QD) |
| QS186EVQ5 | | — | 150 mm (6 in) cable with a 4-pin M12 QD |
| QS186EVQ7 | | — | 4-pin M8 male QD |
| QS186EVQ8 | | — | 4-pin M12 male QD |
| QS186E (940 nm, infrared) | | — | 2 m (6.5 ft) cable) |
| QS186EQ | | — | 150 mm (6 in) cable with a 4-pin M8 QD |
| QS186EQ5 | | — | 150 mm (6 in) cable with a 4-pin M12 QD |
| QS186EQ7 | | — | 4-pin M8 male QD |
| QS186EQ8 | | — | 4-pin M12 male QD |
| QS18VN6R | | NPN | 2 m (6.5 ft) cable) |
| QS18VN6RQ | | NPN | 150 mm (6 in) cable with a 4-pin M8 QD |
| QS18VN6RQ5 | | NPN | 150 mm (6 in) cable with a 4-pin M12 QD |
| QS18VN6RQ8 | | NPN | 4-pin M12 male QD |

Continued on page 4


© Banner Engineering Corp. All rights reserved.
www.bannerengineering.com

Continued from page 3

| Model | Effective Beam | Output | Connection |
|---|---|---|---|
| QS18VP6R | | PNP | 2 m (6.5 ft) cable) |
| QS18VP6R W/30 | | PNP | 9 m cable |
| QS18VP6RQ | | PNP | 150 mm (6 in) cable with a 4-pin M8 QD |
| QS18VP6RQ5 | | PNP | 150 mm (6 in) cable with a 4-pin M12 QD |
| QS18VP6RQ7 | | PNP | 4-pin M8 male QD |
| QS18VP6RQ8 | | PNP | 4-pin M12 male QD |
| QS186EB (940 nm infrared) | | — | 2 m (6.5 ft) cable) |
| QS186EB W/30 | | — | 9 m cable |
| QS186EBQ | | — | 150 mm (6 in) cable with a 4-pin M8 QD |
| QS186EBQ5 | | — | 150 mm (6 in) cable with a 4-pin M12 QD |
| QS186EBQ7 | | — | 4-pin M8 male QD |
| QS186EBQ8 | | — | 4-pin M12 male QD |
| QS18VN6RB | Effective beam: 13 mm (0.5 inch) | NPN | 2 m (6.5 ft) cable) |
| QS18VN6RBQ5 | Range: 3 m (10 ft) | NPN | 150 mm (6 in) cable with a 4-pin M12 QD |
| QS18VN6RBQ8 | | NPN | 4-pin M12 male QD |
| QS18VP6RB | | PNP | 2 m (6.5 ft) cable) |
| QS18VP6RBQ | | PNP | 150 mm (6 in) cable with a 4-pin M8 QD |
| QS18VP6RBQ5 | | PNP | 150 mm (6 in) cable with a 4-pin M12 QD |
| QS18VP6RBQ7 | | PNP | 4-pin M8 male QD |
| QS18VP6RBQ8 | | PNP | 4-pin M12 male QD |

*Polarized retroreflective mode models (630 nm visible red)*

| Model | Range | Output | Connection |
|---|---|---|---|
| QS18VN6LP | | NPN | 2 m (6.5 ft) cable |
| QS18VN6LPQ | | NPN | 150 mm (6 in) cable with a 4-pin M8 QD |
| QS18VN6LPQ5 | | NPN | 150 mm (6 in) cable with a 4-pin M12 QD |
| QS18VN6LPQ7 | | NPN | 4-pin M8 male QD |
| QS18VN6LPQ8 | | NPN | 4-pin M12 male QD |
| QS18VP6LP | 3.5 m (12 ft) | PNP | 2 m (6.5 ft) cable |
| QS18VP6LP W/30 | | PNP | 9 m cable |
| QS18VP6LPQ | | PNP | 150 mm (6 in) cable with a 4-pin M8 QD |
| QS18VP6LPQ5 | | PNP | 150 mm (6 in) cable with a 4-pin M12 QD |
| QS18VP6LPQ7 | | PNP | 4-pin M8 male QD |
| QS18VP6LPQ8 | | PNP | 4-pin M12 male QD |


© Banner Engineering Corp. All rights reserved.
www.bannerengineering.com

*Retroreflective mode models (628 nm visible red)*

| Model | Range | Output | Connection |
|---|---|---|---|
| QS18VN6LV | 6.5 m (21 ft) | NPN | 2 m (6.5 ft) cable |
| QS18VN6LV W/30 | | NPN | 9 m cable |
| QS18VN6LVQ | | NPN | 150 mm (6 in) cable with a 4-pin M8 QD |
| QS18VN6LVQ5 | | NPN | 150 mm (6 in) cable with a 4-pin M12 QD |
| QS18VN6LVQ8 | | NPN | 4-pin M12 male QD |
| QS18VP6LV | | PNP | 2 m (6.5 ft) cable |
| QS18VP6LV W/10 | | PNP | 3 m cable |
| QS18VP6LV W/30 | | PNP | 9 m cable |
| QS18VP6LVQ | | PNP | 150 mm (6 in) cable with a 4-pin M8 QD |
| QS18VP6LVQ5 | | PNP | 150 mm (6 in) cable with a 4-pin M12 QD |
| QS18VP6LVQ7 | | PNP | 4-pin M8 male QD |
| QS18VP6LVQ8 | | PNP | 4-pin M12 male QD |

*Convergent mode models (630 nm visible red)*

| Model | Range | Output | Connection |
|---|---|---|---|
| QS18VN6CV15 | 16 mm (0.63 in) | NPN | 2 m (6.5 ft cable) |
| QS18VN6CV15Q | | NPN | 150 mm (6 in) cable with a 4-pin M8 QD |
| QS18VN6CV15Q5 | | NPN | 150 mm (6 in) cable with a 4-pin M12 QD |
| QS18VN6CV15Q8 | | NPN | 4-pin M12 male QD |
| QS18VP6CV15 | | PNP | 2 m (6.5 ft cable) |
| QS18VP6CV15Q | | PNP | 150 mm (6 in) cable with a 4-pin M8 QD |
| QS18VP6CV15Q5 | | PNP | 150 mm (6 in) cable with a 4-pin M12 QD |
| QS18VP6CV15Q8 | | PNP | 4-pin M12 male QD |
| QS18VN6CV45 | 43 mm (1.7 in) | NPN | 2 m (6.5 ft cable) |
| QS18VN6CV45Q | | NPN | 150 mm (6 in) cable with a 4-pin M8 QD |
| QS18VN6CV45Q5 | | NPN | 150 mm (6 in) cable with a 4-pin M12 QD |
| QS18VN6CV45Q8 | | NPN | 4-pin M12 male QD |
| QS18VP6CV45 | | PNP | 2 m (6.5 ft cable) |
| QS18VP6CV45 W30 | | PNP | 9 m cable |
| QS18VP6CV45Q | | PNP | 150 mm (6 in) cable with a 4-pin M8 QD |
| QS18VP6CV45Q5 | | PNP | 150 mm (6 in) cable with a 4-pin M12 QD |
| QS18VP6CV45Q8 | | PNP | 4-pin M12 male QD |


© Banner Engineering Corp. All rights reserved.
www.bannerengineering.com

*Diffuse mode models*

| Model | Diffuse Mode | Range | Output | Connection |
|---|---|---|---|---|
| QS18VN6D | 940 nm Infrared | 450 mm (18 in) | NPN | 2 m (6.5 ft) cable |
| QS18VN6D W/30 | | | NPN | 9 m cable |
| QS18VN6DQ | | | NPN | 150 mm (6 in) cable with a 4-pin M8 QD |
| QS18VN6DQ5 | | | NPN | 150 mm (6 in) cable with a 4-pin M12 QD |
| QS18VN6DQ8 | | | NPN | 4-pin M12 male QD |
| QS18VP6D | | | PNP | 2 m (6.5 ft) cable |
| QS18VP6D W/30 | | | PNP | 9 m cable |
| QS18VP6DQ | | | PNP | 150 mm (6 in) cable with a 4-pin M8 QD |
| QS18VP6DQ7 | | | PNP | 4-pin M8 male QD |
| QS18VP6DQ8 | | | PNP | 4-pin M12 male QD |
| QS18VN6DL | | 600 mm (24 in) | NPN | 2 m (6.5 ft) cable |
| QS18VN6DLQ | | | NPN | 150 mm (6 in) cable with a 4-pin M8 QD |
| QS18VN6DLQ5 | | | NPN | 150 mm (6 in) cable with a 4-pin M12 QD |
| QS18VN6DLQ8 | | | NPN | 4-pin M12 male QD |
| QS18VP6DL | | | PNP | 2 m (6.5 ft) cable |
| QS18VP6DL W/30 | | | PNP | 9 m cable |
| QS18VP6DLQ | | | PNP | 150 mm (6 in) cable with a 4-pin M8 QD |
| QS18VP6DLQ5 | | | PNP | 150 mm (6 in) cable with a 4-pin M12 QD |
| QS18VP6DLQ7 | | | PNP | 4-pin M8 male QD |
| QS18VP6DLQ8 | | | PNP | 4-pin M12 male QD |
| QS18VN6DVS | 630 nm Visible red | 250 mm (10 in) | NPN | 2 m (6.5 ft) cable |
| QS18VN6DVS W/30 | | | NPN | 9 m cable |
| QS18VN6DVSQ5 | | | NPN | 150 mm (6 in) cable with a 4-pin M12 QD |
| QS18VN6DVSQ8 | | | NPN | 4-pin M12 male QD |
| QS18VP6DVS | | | PNP | 2 m (6.5 ft) cable |
| QS18VP6DVS W/30 | | | PNP | 9 m cable |
| QS18VP6DVSQ | | | PNP | 150 mm (6 in) cable with a 4-pin M8 QD |
| QS18VP6DVSQ5 | | | PNP | 150 mm (6 in) cable with a 4-pin M12 QD |
| QS18VP6DVSQ7 | | | PNP | 4-pin M8 male QD |
| QS18VP6DVSQ8 | | | PNP | 4-pin M12 male QD |
| QS18VN6DB (Wide) | Infrared | 450 mm (18 in) | NPN | 2 m (6.5 ft) cable |
| QS18VN6DBQ | | | NPN | 150 mm (6 in) cable with a 4-pin M8 QD |
| QS18VN6DBQ5 | | | NPN | 150 mm (6 in) cable with a 4-pin M12 QD |
| QS18VN6DBQ8 | | | NPN | 4-pin M12 male QD |
| QS18VP6DB (Wide) | | | PNP | 2 m (6.5 ft) cable |

Continued on page 6


© Banner Engineering Corp. All rights reserved.
www.bannerengineering.com

Continued from page 6

| Model | Diffuse Mode | Range | Output | Connection |
|---|---|---|---|---|
| QS18VP6DBQ | | | PNP | 150 mm (6 in) cable with a 4-pin M8 QD |
| QS18VP6DBQ5 | | | PNP | 150 mm (6 in) cable with a 4-pin M12 QD |
| QS18VP6DBQ7 | | | PNP | 4-pin M8 male QD |
| QS18VP6DBQ8 | | | PNP | 4-pin M12 male QD |

*Divergent mode models (940 nm infrared)*

| Model | Range | Output | Connection |
|---|---|---|---|
| QS18VN6W | 100 mm (4 in) | NPN | 2 m (6.5 ft) cable |
| QS18VN6WQ | | NPN | 150 mm (6 in) cable with a 4-pin M8 QD |
| QS18VN6WQ5 | | NPN | 150 mm (6 in) cable with a 4-pin M12 QD |
| QS18VN6WQ7 | | NPN | 4-pin M8 male QD |
| QS18VN6WQ8 | | NPN | 4-pin M12 male QD |
| QS18VP6W | | PNP | 2 m (6.5 ft) cable |
| QS18VP6WQ | | PNP | 150 mm (6 in) cable with a 4-pin M8 QD |
| QS18VP6WQ5 | | PNP | 150 mm (6 in) cable with a 4-pin M12 QD |
| QS18VP6WQ7 | | PNP | 4-pin M8 male QD |
| QS18VP6WQ8 | | PNP | 4-pin M12 male QD |

*Fixed-field mode models (630 nm visible red)*

| Model | Range | Output | Connection |
|---|---|---|---|
| QS18VN6FF50 | 50 mm (2 in) | NPN | 2 m (6.5 ft) cable |
| QS18VN6FF50 W/30 | | NPN | 9 m cable |
| QS18VN6FF50Q | | NPN | 150 mm (6 in) cable with a 4-pin M8 QD |
| QS18VN6FF50Q5 | | NPN | 150 mm (6 in) cable with a 4-pin M12 QD |
| QS18VN6FF50Q7 | | NPN | 4-pin M8 male QD |
| QS18VN6FF50Q8 | | NPN | 4-pin M12 male QD |
| QS18VP6FF50 | | PNP | 2 m (6.5 ft) cable |
| QS18VP6FF50 W/30 | | PNP | 9 m cable |
| QS18VP6FF50Q | | PNP | 150 mm (6 in) cable with a 4-pin M8 QD |
| QS18VP6FF50Q5 | | PNP | 150 mm (6 in) cable with a 4-pin M12 QD |
| QS18VP6FF50Q8 | | PNP | 4-pin M12 male QD |
| QS18VN6FF100 | 100 mm (4 in) | NPN | 2 m (6.5 ft) cable |
| QS18VN6FF100 W/30 | | NPN | 9 m cable |
| QS18VN6FF100Q5 | | NPN | 150 mm (6 in) cable with a 4-pin M12 QD |
| QS18VN6FF100Q8 | | NPN | 4-pin M12 male QD |
| QS18VP6FF100 | | PNP | 2 m (6.5 ft) cable |

Continued on page 8


© Banner Engineering Corp. All rights reserved.
www.bannerengineering.com

Continued from page 7

| Model | Range | Output | Connection |
|---|---|---|---|
| QS18VP6FF125 | 125 mm (5 in) | PNP | 2 m (6.5 ft) cable |
| QS18VN6FF150 | 150 mm (6 in) | NPN | 2 m (6.5 ft) cable |
| QS18VN6FF150Q5 | | NPN | 150 mm (6 in) cable with a 4-pin M12 QD |
| QS18VN6FF150Q8 | | NPN | 4-pin M12 male QD |
| QS18VP6FF150 | | PNP | 2 m (6.5 ft) cable |
| QS18VP6FF150 W/30 | | PNP | 9 m cable |
| QS18VP6FF150Q | | PNP | 150 mm (6 in) cable with a 4-pin M8 QD |
| QS18VP6FF150Q5 | | PNP | 150 mm (6 in) cable with a 4-pin M12 QD |
| QS18VP6FF150Q7 | | PNP | 4-pin M8 male QD |
| QS18VP6FF150Q8 | | PNP | 4-pin M12 male QD |

*Plastic fiber optic mode models (660 nm visible red)*

| Model | Range | Output | Connection |
|---|---|---|---|
| QS18VN6FP | Range varies by sensing mode and fiber optics used | NPN | 2 m (6.5 ft) cable |
| QS18VN6FPQ | | NPN | 150 mm (6 in) cable with a 4-pin M8 QD |
| QS18VN6FPQ5 | | NPN | 150 mm (6 in) cable with a 4-pin M12 QD |
| QS18VN6FPQ7 | | NPN | 4-pin M8 male QD |
| QS18VN6FPQ8 | | NPN | 4-pin M12 male QD |
| QS18VP6FP | | PNP | 2 m (6.5 ft) cable |
| QS18VP6FPQ | | PNP | 150 mm (6 in) cable with a 4-pin M8 QD |
| QS18VP6FPQ5 | | PNP | 150 mm (6 in) cable with a 4-pin M12 QD |
| QS18VP6FPQ7 | | PNP | 4-pin M8 male QD |
| QS18VP6FPQ8 | | PNP | 4-pin M12 male QD |

*Glass fiber optic mode models (940 nm infrared)*

| Model | Range | Output | Connection |
|---|---|---|---|
| QS18VN6FQ5 | Range varies by sensing mode and fiber optics used | NPN | 150 mm (6 in) cable with a 4-pin M12 QD |
| QS18VN6FQ7 | | NPN | 4-pin M8 male QD |
| QS18VP6F | | PNP | 2 m (6.5 ft) cable |
| QS18VP6FQ | | PNP | 150 mm (6 in) cable with a 4-pin M8 QD |
| QS18VP6FQ5 | | PNP | 150 mm (6 in) cable with a 4-pin M12 QD |
| QS18VP6FQ8 | | PNP | 4-pin M12 male QD |

Models with a quick disconnect require a mating cordset.

For a list of discontinued models, see Discontinued Models.


© Banner Engineering Corp. All rights reserved.
www.bannerengineering.com

# Specifications

**Supply Voltage**

10 V DC to 30 V DC (10% maximum ripple) at less than 25 mA, exclusive of load

Protected against reverse polarity and transient voltages

**Light Source**

Glass Fiber Optic, Opposed and Diffuse mode models: Infrared, 940 nm

Plastic Fiber Optic, Retroreflective, Convergent models: Visible red, 660 nm

Fixed-Field and DVS models: Visible red, 630 nm

**Adjustments**

Glass Fiber Optic, Plastic Fiber Optic, Convergent, Diffuse, and Retroreflective mode models (only): Single-turn sensitivity (Gain) adjustment potentiometer

**Indicators**

Two LED indicators on the sensor top

Green: Power on

Amber: Light sensed

Amber flashing: Marginal excess gain (1 to 1.5 times excess gain)

**Construction**

ABS housing

3 mm mounting hardware included

**Connections**

2 m (6.5 ft) 4-wire PVC cable; 9 m (30 ft) 4-wire PVC cable; 4-pin M8 or M12 QD; or 150 mm (6 in) cable with a 4-pin M8 or M12 QD, depending on the model

**Repeatability**

Opposed Mode: 100 microseconds

DVS, DL and FF Modes: 90 microseconds

All Other Modes: 150 microseconds

**Output Configuration**

Solid-state complementary (SPDT): NPN or PNP (current sinking or sourcing), depending on model

Rating: 100 mA maximum each output at 25 °C

DVS, DL and FF Modes ON-state Saturation Voltage: less than 1.5 V at 10 mA; less than 3 V at 100 mA

All Other Modes: ON-state Saturation Voltage: less than 1 V at 10 mA; less than 1.5 V at 100 mA

Protected against false pulse on power-up and continuous overload or short circuit of outputs

**Output Response**

Opposed Mode: 750 microseconds ON; 375 microseconds OFF

DVS, FF, and DL Modes: 850 microseconds ON/OFF

All Other Modes: 600 microseconds ON/OFF

100-millisecond delay on power-up; outputs do not conduct during this time

**Environmental**

IP67

UL Type 1

**Operating Conditions**

–20 °C to +70 °C (–4 °F to +158 °F)

95% at +50 °C maximum relative humidity (non-condensing)

**Vibration and Mechanical Shock**

All models meet MIL-STD-202F, Method 201A (Vibration: 10 Hz to 60 Hz maximum, 0.06 inch (1.52 mm) double amplitude, 10G maximum acceleration) requirements. Also meets IEC 60947-5-2 (Shock: 30G 11 ms duration, half sine wave) requirements.

**Required Overcurrent Protection**

**WARNING:** Electrical connections must be made by qualified personnel in accordance with local and national electrical codes and regulations.

Overcurrent protection is required to be provided by end product application per the supplied table.

Overcurrent protection may be provided with external fusing or via Current Limiting, Class 2 Power Supply.

Supply wiring leads < 24 AWG shall not be spliced.

For additional product support, go to www.bannerengineering.com.

| Supply Wiring (AWG) | Required Overcurrent Protection (A) | Supply Wiring (AWG) | Required Overcurrent Protection (A) |
|---|---|---|---|
| 20 | 5.0 | 26 | 1.0 |
| 22 | 3.0 | 28 | 0.8 |
| 24 | 2.0 | 30 | 0.5 |

**Certifications**

Banner Engineering BV
Park Lane, Culliganlaan 2F bus 3
1831 Diegem, BELGIUM

Turck Banner LTD Blenheim House
Blenheim Court
Wickford, Essex SS11 8YT
GREAT BRITAIN

**NOTE:** For performance specifications of the FF50 and FF100 models built prior to date code 17090, refer to document p/n 63908.

## FCC Part 15 Class A for Unintentional Radiators

This equipment has been tested and found to comply with the limits for a Class A digital device, pursuant to Part 15 of the FCC Rules. These limits are designed to provide reasonable protection against harmful interference when the equipment is operated in a commercial environment. This equipment generates, uses, and can radiate radio frequency energy and, if not installed and used in accordance with the instruction manual, may cause harmful interference to radio communications. Operation of this equipment in a residential area is likely to cause harmful interference in which case the user will be required to correct the interference at his own expense.

(Part 15.21) Any changes or modifications not expressly approved by the party responsible for compliance could void the user's authority to operate this equipment.


© Banner Engineering Corp. All rights reserved.
www.bannerengineering.com

# Industry Canada ICES-003(A)

This device complies with CAN ICES-3 (A)/NMB-3(A). Operation is subject to the following two conditions: 1) This device may not cause harmful interference; and 2) This device must accept any interference received, including interference that may cause undesired operation.

Cet appareil est conforme à la norme NMB-3(A). Le fonctionnement est soumis aux deux conditions suivantes : (1) ce dispositif ne peut pas occasionner d'interférences, et (2) il doit tolérer toute interférence, y compris celles susceptibles de provoquer un fonctionnement non souhaité du dispositif.

# Dimensions

Model Suffix E, EV, R, and FF

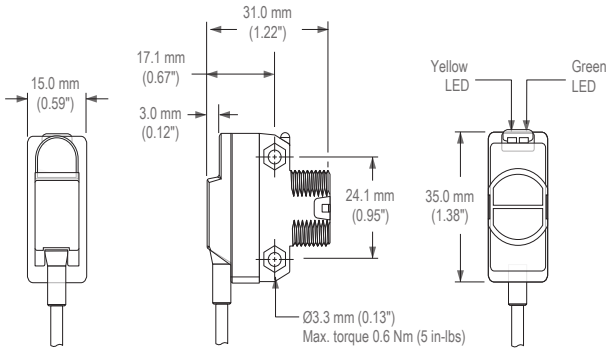


Model Suffix EB, RB

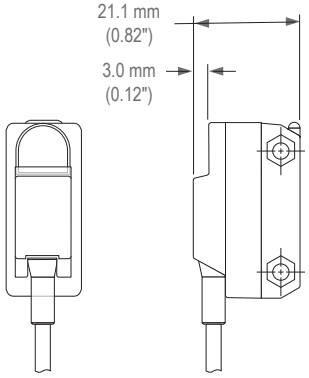


Model Suffix DB, W

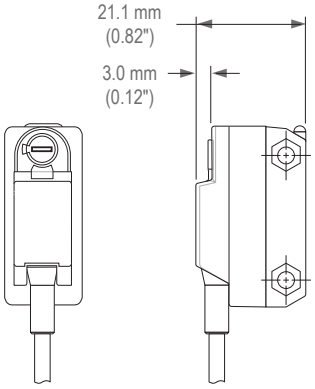


Model Suffix FP

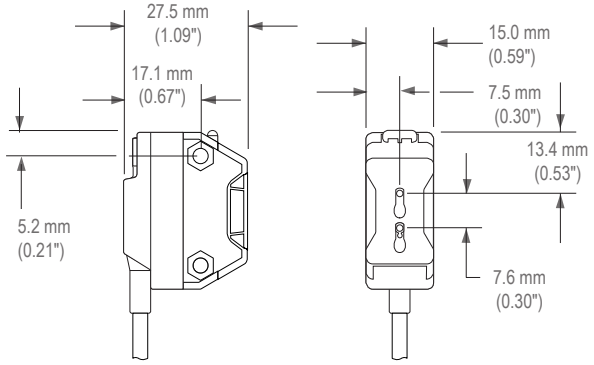


Model Suffix CV15, CV45, D, DL, LV, LP

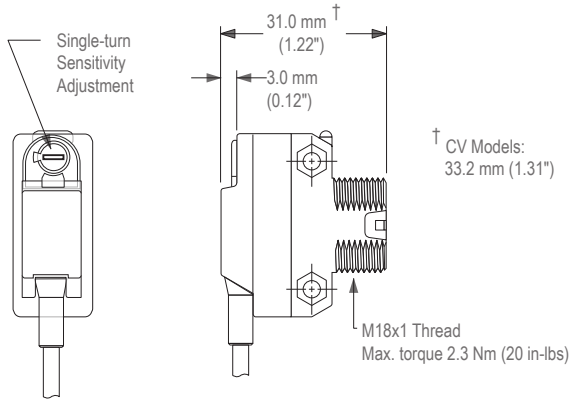


Model Suffix F

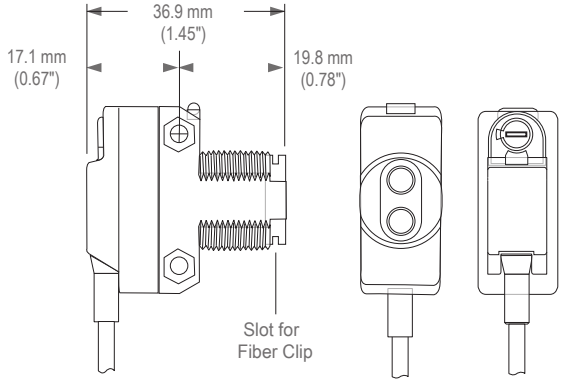



© Banner Engineering Corp. All rights reserved.
www.bannerengineering.com

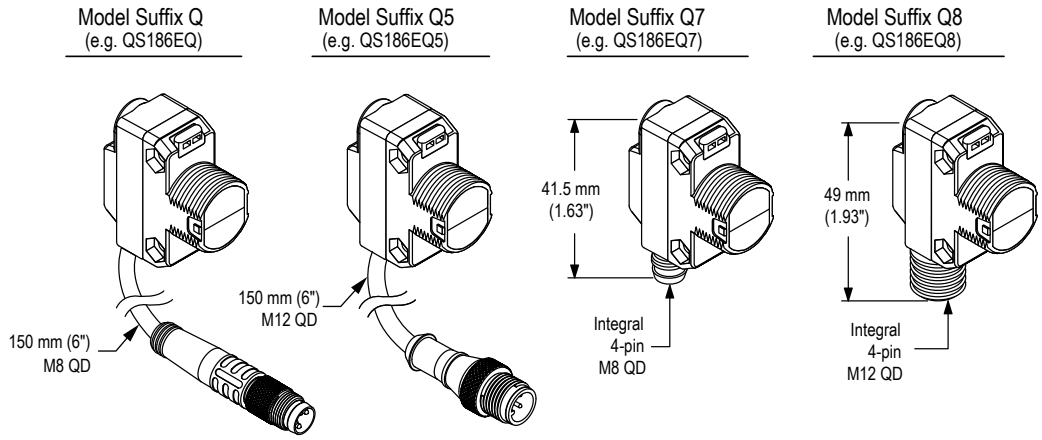


**M18 x 1 Jam Nut**

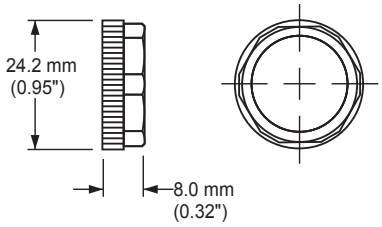


**M3 hardware packet contents:**

- 2 - M3 x 0.5 x 20 mm stainless steel screw
- 2 - M3 x 0.5 stainless steel hex nut
- 2 - M3 stainless steel washer

**Packing list:**

- Sensor
- M18 x 1 jam nut
- M3 hardware packet

## Performance Curves

**Opposed Mode**

**Excess Gain Curve**

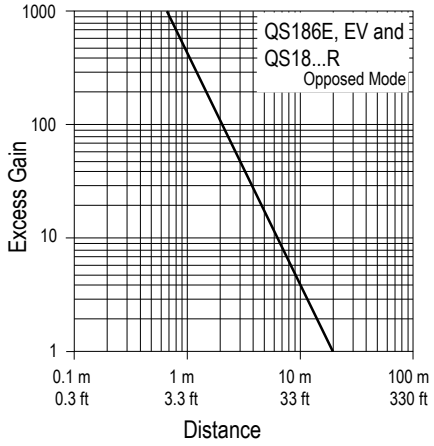


**Beam Pattern**

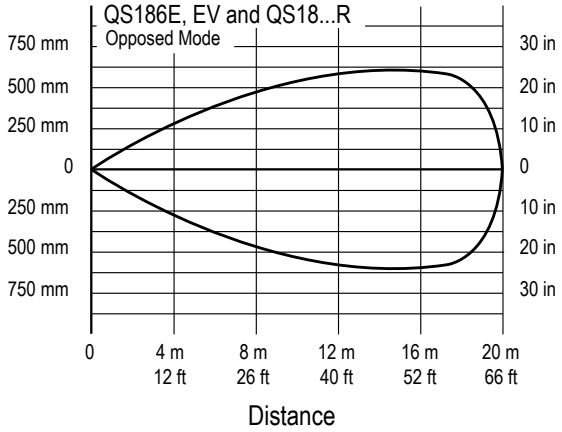


Continued on page 12


© Banner Engineering Corp. All rights reserved.
www.bannerengineering.com

Continued from page 11

## Opposed Mode

### Excess Gain Curve

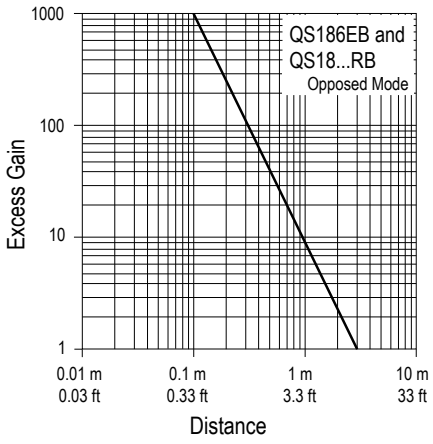


### Beam Pattern

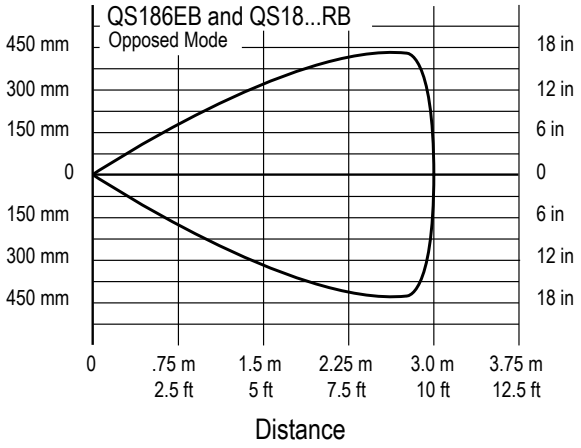


## Polarized Retroreflective

### Excess Gain Curve

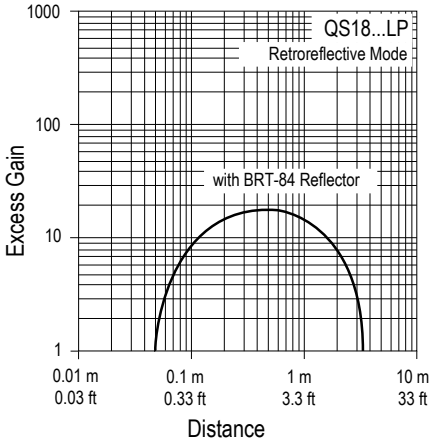


### Beam Pattern

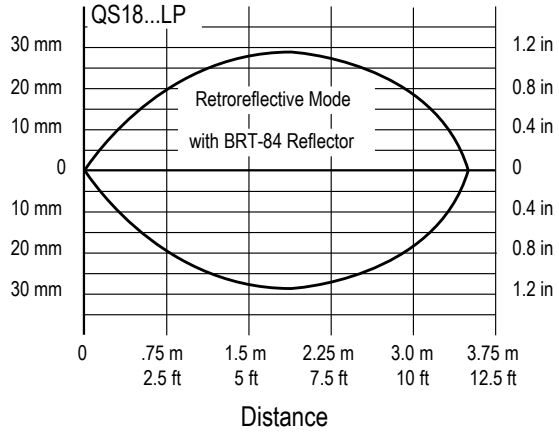



© Banner Engineering Corp. All rights reserved.
www.bannerengineering.com

## Retroreflective

### Excess Gain Curve

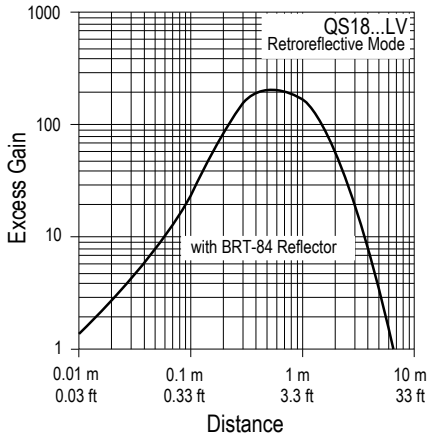


### Beam Pattern

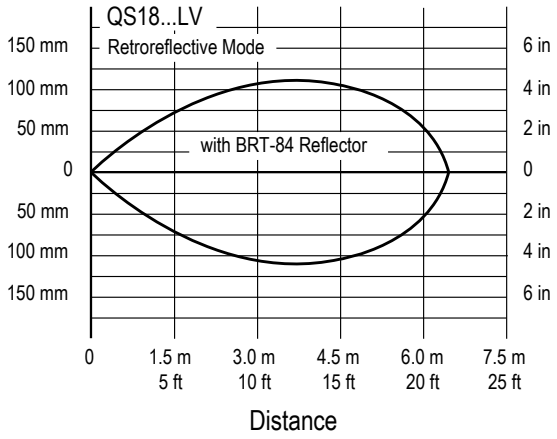


## Convergent (Performance is based on a 90% reflectance white test card.)

### Excess Gain Curve

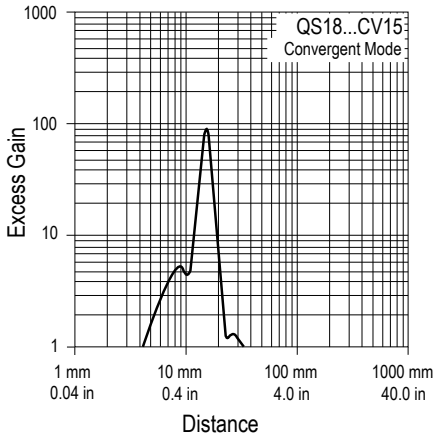


### Beam Pattern

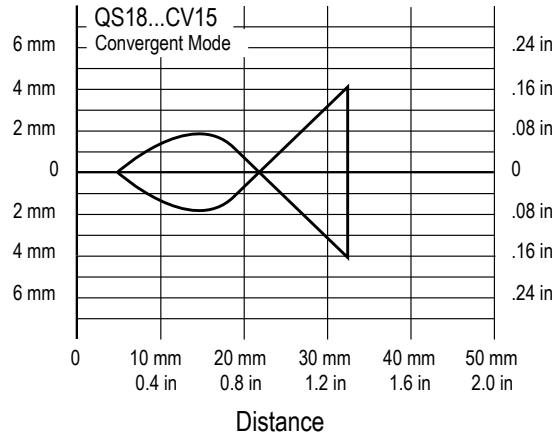


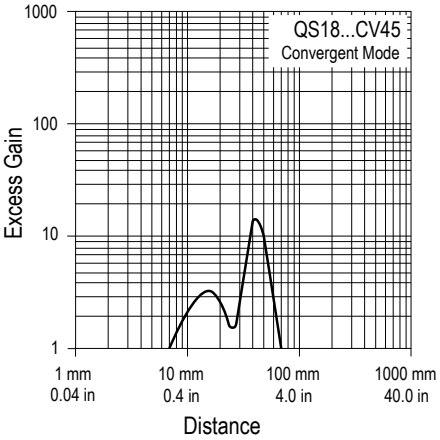


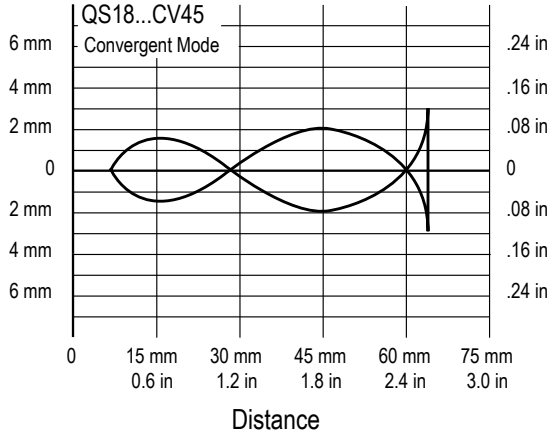



© Banner Engineering Corp. All rights reserved.
www.bannerengineering.com

**Diffuse (Performance is based on a 90% reflectance white test card.)**

**Excess Gain Curve**

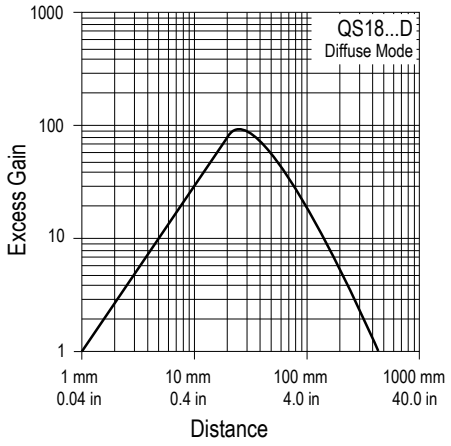


**Beam Pattern**

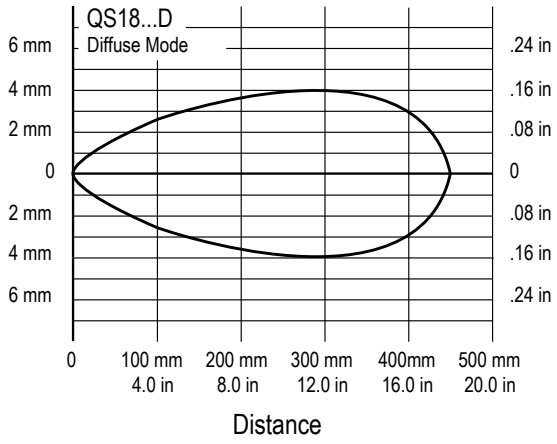


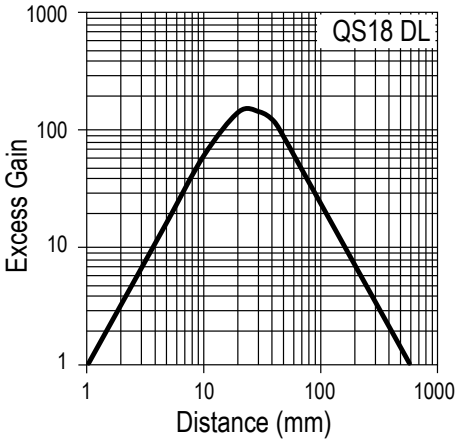


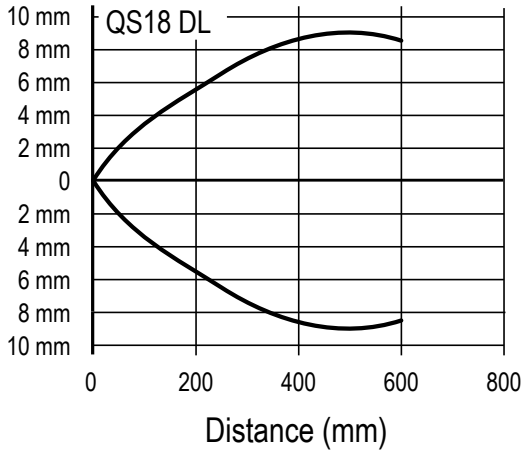


**Diffuse (Performance is based on a 90% reflectance white test card.)**

**Excess Gain Curve**

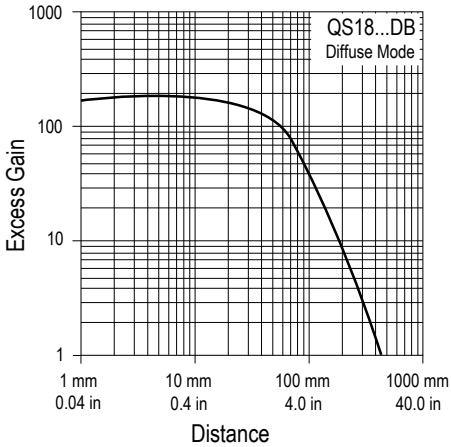


**Beam Pattern**

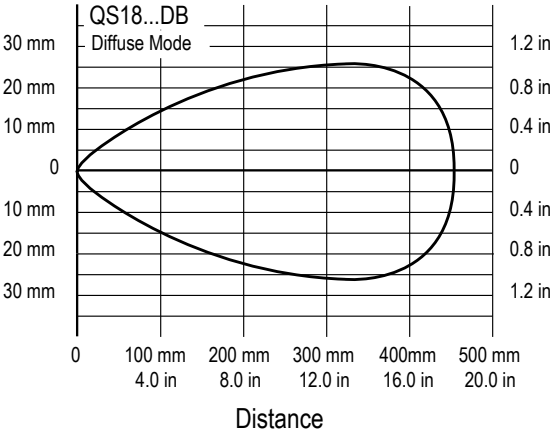


Continued on page 15


© Banner Engineering Corp. All rights reserved.
www.bannerengineering.com

Continued from page 14

## Diffuse (Performance is based on a 90% reflectance white test card.)

### Excess Gain Curve

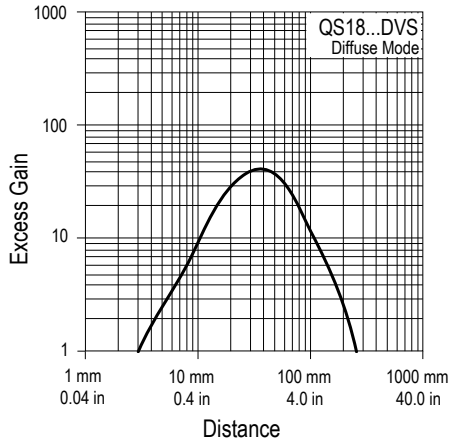


### Beam Pattern

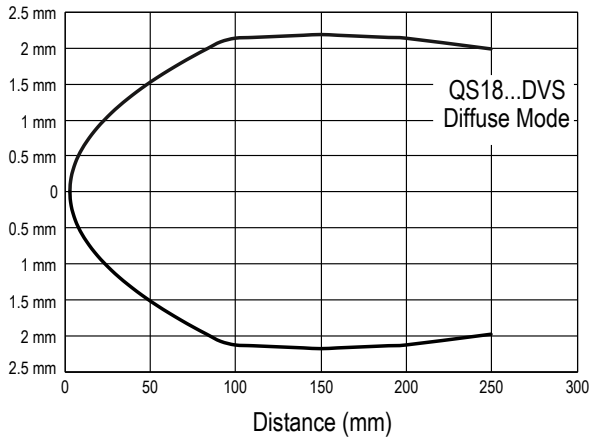


## Divergent (Performance is based on a 90% reflectance white test card.)

### Excess Gain Curve

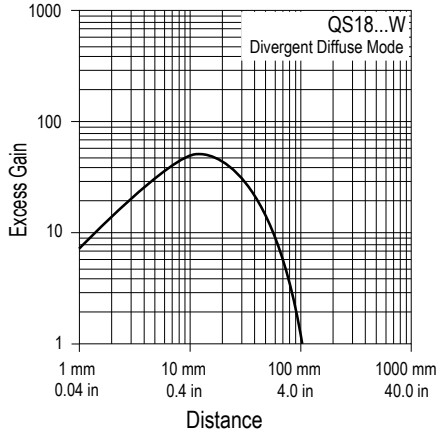


### Beam Pattern

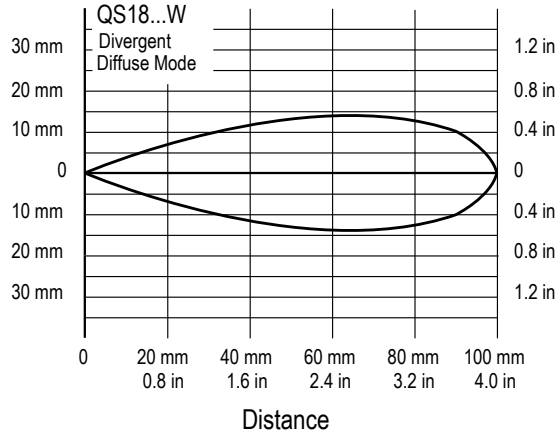


## Fixed Field

### Excess Gain Curve (50 mm)

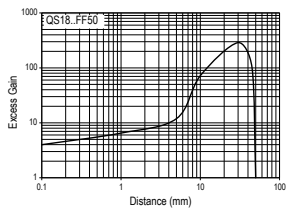


### Excess Gain Curve (100 mm)

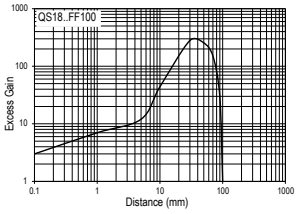


### Excess Gain Curve (150 mm)

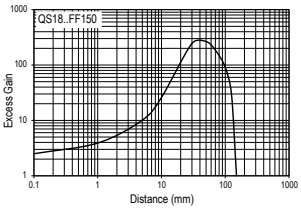


### Spot Sizes

50 mm Models:

At 25 mm: 8 × 5.5 mm
At 50 mm: 6 × 5 mm

100 mm Models

At 50 mm: 6 × 4 mm
At 100 mm: 3 × 3 mm

150 mm Models

At 75 mm: 5 × 3.5 mm
At 150 mm: 6 × 6 mm


© Banner Engineering Corp. All rights reserved.
www.bannerengineering.com

## Opposed - Plastic Fiber

### Excess Gain Curve

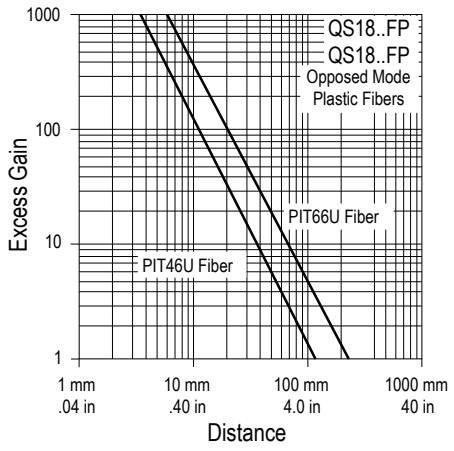


### Beam Pattern

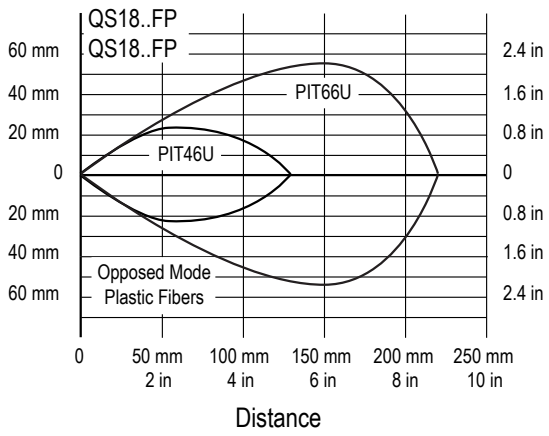


## Bifurcated - Plastic Fiber (Performance is based on a 90% reflectance white test card.)

### Excess Gain Curve

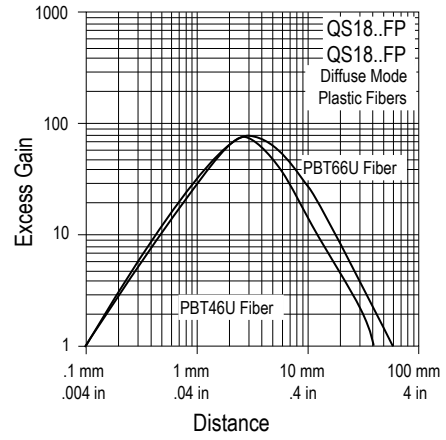


### Beam Pattern

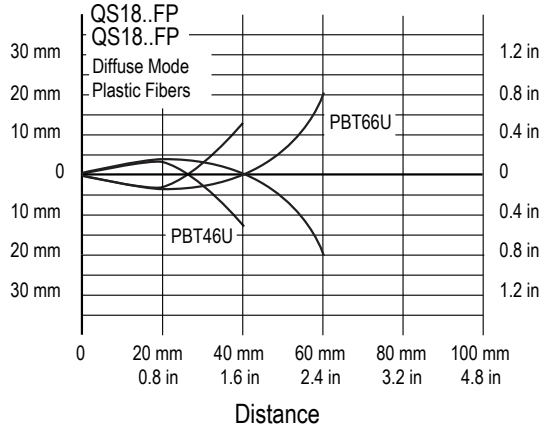


## Opposed - Glass Fiber (Performance is based on a 90% reflectance white test card.)

### Excess Gain Curve

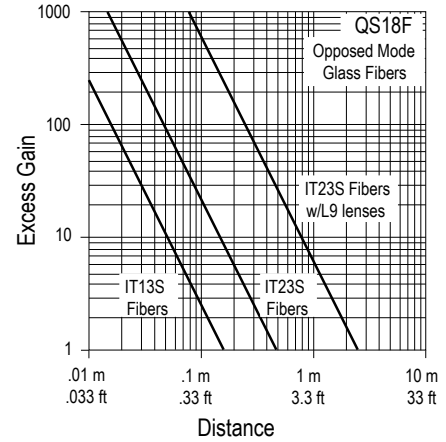


### Beam Pattern

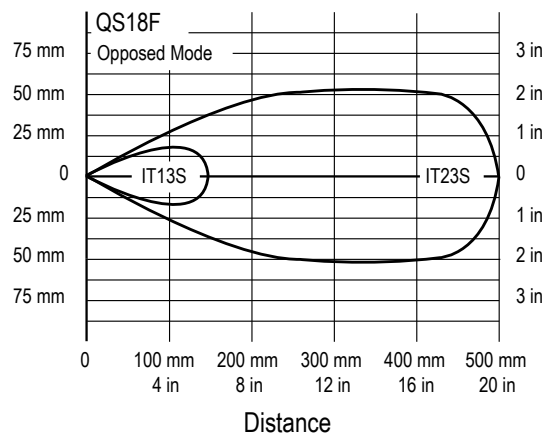



© Banner Engineering Corp. All rights reserved.
www.bannerengineering.com

## Bifurcated - Glass Fiber (Performance is based on a 90% reflectance white test card.)

### Excess Gain Curve

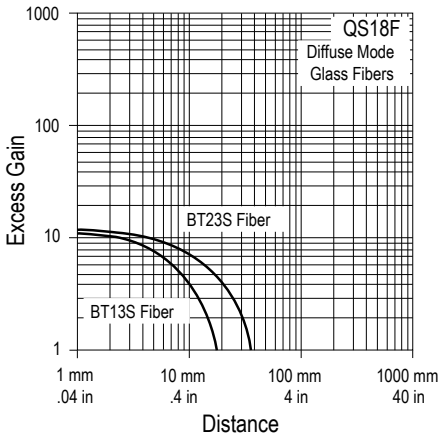


### Beam Pattern

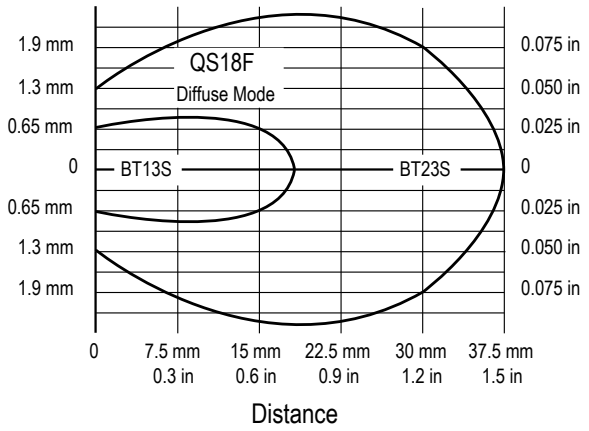



© Banner Engineering Corp. All rights reserved.
www.bannerengineering.com

Chapter Contents

Wiring Diagrams ..... 18
Installing Fibers ..... 18
Mount the Device ..... 20

# Chapter 2 Installation Instructions

## Wiring Diagrams

*QS18 with NPN outputs*

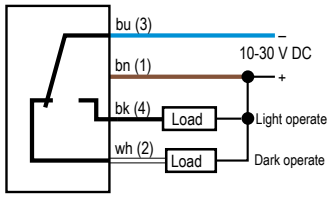


*QS18 with PNP outputs*

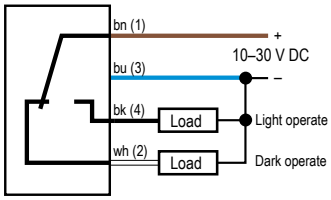


*QS18 Emitters*

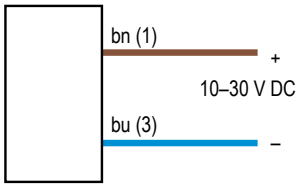


*4-pin M12 male pinouts*

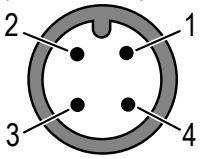


*4-pin M8 male pinouts*

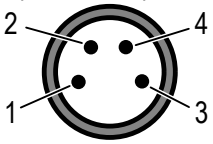


1 = Brown
2 = White
3 = Blue
4 = Black

In dark operate (DO) mode, the output is ON when the target returns less light to the sensor than the configured target and OFF when the sensor detects more light than the configured/taught target.

In light operate (LO) mode, the output is ON when the target returns the same or more light to the sensor and OFF when the sensor detects less light than the configured/taught target.

In **opposed and retroreflective sensing modes**, light operate is active when the beam is unblocked and dark operate is active when the beam is blocked.

In **diffuse and fixed field sensing modes**, light operate is active when the target is present and dark operate is active when the target is absent.

## Installing Fibers

### Cutting Unterminated Plastic Fibers

Unterminated plastic fibers are designed to be cut by the user to the length required for the application.

To facilitate cutting, a Banner model **PFC-1** cutting device is supplied with the fiber. Cut the fiber as follows:

*PFC-1 Cutting Device*

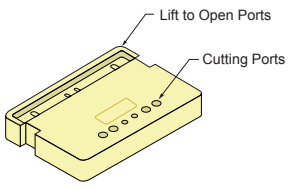


Use small ports for fiber sizes:

- 0.25 mm (0.01 inches)
- 0.5 mm (0.02 inches)

Use large ports for fiber sizes:

- 0.75 mm (0.03 inches)
- 1.0 mm (0.04 inches)
- 1.5 mm (0.06 inches)


© Banner Engineering Corp. All rights reserved.
www.bannerengineering.com

1. Locate the control end of the fiber (the unfinished end).
2. Determine the length of fiber required for the application. If using a bifurcated fiber, separate the two halves of the fiber at least 51 mm (2 inches) beyond the fiber-cutting location.
3. Lift the top (blade) of the cutter to open the cutting ports.
4. Insert one of the control ends through one of the cutting ports on the cutter so that the excess fiber protrudes from the back of the cutter.
5. Double-check the fiber length, and close the cutter until the fiber is cut.
6. Using a different cutting port, cut the second control end to the required length.

> **NOTE:** To ensure a clean cut each time, do not use a cutting port more than once.

7. Gently wipe the cut ends of the fiber with a clean, dry cloth to remove any contamination. Do not use solvents or abrasives on any exposed optical fiber.

## Install the Plastic Fibers

Follow these steps to install the plastic fibers.

*Installing Plastic Fibers*

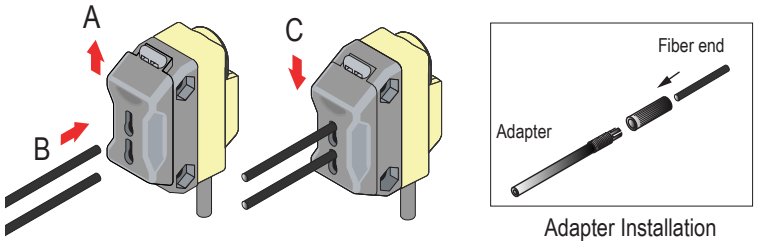


1. Slide the fiber gripper up to unlock it (A).
2. If using 0.25 mm or 0.5 mm core fibers, slide the plastic fiber adapters onto the fibers, flush with the fiber ends.
3. Carefully insert the prepared plastic fiber ends into the ports (B) as far as possible without applying extra force.
4. Slide the fiber gripper down to lock the fibers in place (C).

## Install the Glass Fibers

Follow these steps to install the glass fibers.

*Installing the glass fibers in a QS18 sensor*

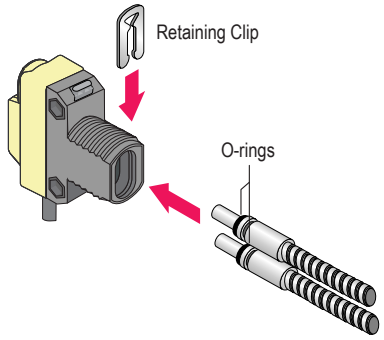


1. Slide the supplied o-ring on the sensor end of the fibers, as shown.
2. Press the fiber ends firmly into the ports located on the front of the sensor.
3. Slide the supplied u-shaped retaining clip into the slot in the sensor's barrel until the clip snaps into place.


© Banner Engineering Corp. All rights reserved.
www.bannerengineering.com

# Mount the Device

1. If a bracket is needed, mount the device onto the bracket.
2. Mount the device (or the device and the bracket) to the machine or equipment at the desired location. Do not tighten the mounting screws at this time.
3. Check the device alignment.
4. Tighten the mounting screws to secure the device (or the device and the bracket) in the aligned position.


© Banner Engineering Corp. All rights reserved.

Chapter Contents

Sensor Sensitivity Adjustment ..... 21

# Chapter 3 Operating Instructions

## Sensor Sensitivity Adjustment

After the sensor and retroreflector have been properly installed, the sensor is ready to be adjusted to ensure detection of the desired object. Sensor sensitivity is adjusted with the single turn adjuster.


© Banner Engineering Corp. All rights reserved.

Chapter Contents

Cordsets ..... 22
Sensor Status Indicators ..... 23
QS18 Brackets ..... 23
Retroreflective Targets ..... 23
Plastic and Glass Fiber Optics ..... 23

# Chapter 4 QS18 Accessories

## Cordsets

| 4-pin Single-Ended M12 Female Cordsets (datasheet p/n 235937) | | | | |
|---|---|---|---|---|
| **Model** | **Length** | **Dimensions (mm)** | **Pinout (Female)** | |
| **BC-M12F4-22-1** | 1 m (3.28 ft) | 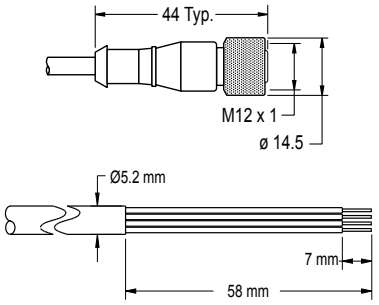 | 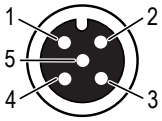 | 1 = Brown<br>2 = White<br>3 = Blue<br>4 = Black<br>5 = Unused<br>c UL us LISTED |
| **BC-M12F4-22-2** | 2 m (6.56 ft) | | | |
| **BC-M12F4-22-5** | 5 m (16.4 ft) | | | |
| **BC-M12F4-22-8** | 8 m (26.25 ft) | | | |
| **BC-M12F4-22-10** | 10 m (30.81 ft) | | | |
| **BC-M12F4-22-15** | 15 m (49.2 ft) | | | |
| **BC-M12F4-22-20** | 20 m (65.61 ft) | | | |
| **BC-M12F4-22-25** | 25 m (82.02 ft) | | | |
| **BC-M12F4-22-30** | 30 m (98.42 ft) | | | |

| 4-pin Single-Ended M12 Female Right-Angle Cordsets (datasheet p/n 235937) | | | | |
|---|---|---|---|---|
| **Model** | **Length** | **Dimensions (mm)** | **Pinout (Female)** | |
| **BC-M12F4A-22-1** | 1 m (3.28 ft) | 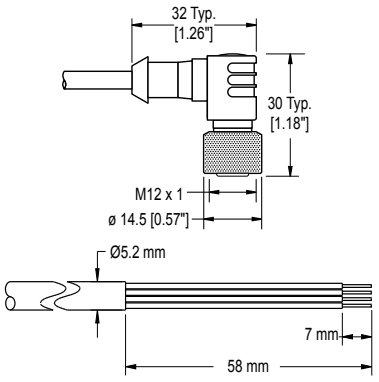 | 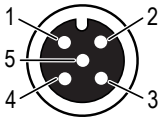 | 1 = Brown<br>2 = White<br>3 = Blue<br>4 = Black<br>5 = Unused<br>c UL us LISTED |
| **BC-M12F4A-22-2** | 2 m (6.56 ft) | | | |
| **BC-M12F4A-22-5** | 5 m (16.4 ft) | | | |
| **BC-M12F4A-22-8** | 8 m (26.25 ft) | | | |
| **BC-M12F4A-22-10** | 10 m (30.81 ft) | | | |
| **BC-M12F4A-22-15** | 15 m (49.2 ft) | | | |

| 4-Pin Single-Ended Snap-on M8 Female Cordsets | | | | |
|---|---|---|---|---|
| **Model** | **Length** | **Style** | **Dimensions** | **Pinout (Female)** |
| **PKG4-2** | 2.03 m (6.66 ft) | Straight | 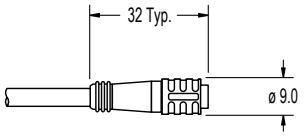 | 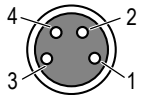 1 = Brown<br>2 = White<br>3 = Blue<br>4 = Black |

Continued on page 23


© Banner Engineering Corp. All rights reserved.
www.bannerengineering.com

Continued from page 22

| 4-Pin Single-Ended Snap-on M8 Female Cordsets | | | | | |
|---|---|---|---|---|---|
| **Model** | **Length** | **Style** | **Dimensions** | **Pinout (Female)** | |
| **PKW4Z-2** | 2 m (6.56 ft) | Right-Angle | 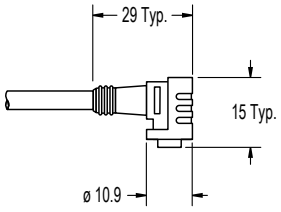 | 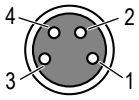 | |

## Sensor Status Indicators

| S15L Series In-Line Sensor Status Indicator | | | | | | |
|---|---|---|---|---|---|---|
| **Model** | **Input Type** | **LED Color** | **Dimensions** | **Female** | **Male** | **Wiring** |
| **S15LGYPQ** | PNP | Power ON = Green<br>Input Active = Yellow | 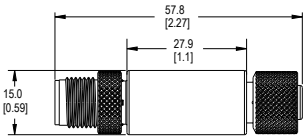 | 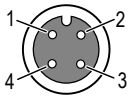 | 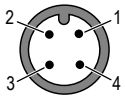 | 1 = Brown, 10 to 30 V DC<br>2 = White<br>3 = Blue, DC common<br>4 = Black, Sensor Input |
| **S15LGYNQ** | NPN | | | | | |

## QS18 Brackets

**SMB18A**

- Right-angle mounting bracket with a curved slot for versatile orientation
- 12-ga. stainless steel
- 18 mm sensor mounting hole
- Clearance for M4 (#8) hardware
- CAD Files: DXF, PDF, IGS, STP

**Hole center spacing:** A to B = 24.2
**Hole size:** A = ø 4.6, B = 17.0 × 4.6, C = ø 18.5

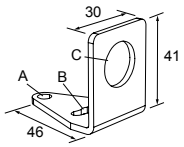


**SMB312S**

- Stainless steel 2-axis, side-mount bracket
- CAD Files: DXF, PDF, IGS, STP

A = 4.3 × 7.5, B = diam. 3, C = 3 × 15.3

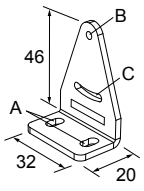


All measurements are in millimeters.

## Retroreflective Targets

Go to www.bannerengineering.com for complete information.

**NOTE:** Polarized sensors require corner cube-type retroreflective targets only.

## Plastic and Glass Fiber Optics

Go to www.bannerengineering.com for a list of plastic and glass fiber optic cables.


© Banner Engineering Corp. All rights reserved.
www.bannerengineering.com

Chapter Contents

Clean Sensor with Compressed Air Then Isopropyl Alcohol ..... 24
Repairs and Translations (No Field-Replaceable Parts) ..... 24
Discontinued Models ..... 26
Contact Us ..... 28
Banner Engineering Corp Limited Warranty ..... 28

# Chapter 5 Product Support and Maintenance

## Clean Sensor with Compressed Air Then Isopropyl Alcohol

Handle the sensor with care during installation and operation. Sensor windows soiled by fingerprints, dust, water, oil, etc. create stray light that may degrade the peak performance of the sensor.

Blow dust from the sensor using filtered, compressed air. If the sensor is still dirty, gently wipe the sensor with a dry optical cloth. If the dry optical cloth does not remove all residue, use 70% isopropyl alcohol on a clean optical cloth, then dry with a clean dry optical cloth and blow with filtered, compressed air. Do not use any other chemicals for cleaning.

## Repairs and Translations (No Field-Replaceable Parts)

**English**

Contact Banner Engineering for troubleshooting of this device. **Do not attempt any repairs to this Banner device; it contains no field-replaceable parts or components.** If the device, device part, or device component is determined to be defective by a Banner Applications Engineer, they will advise you of Banner's RMA (Return Merchandise Authorization) procedure.

```
IMPORTANT: If instructed to return the device, pack it with care. Damage that occurs in return
shipping is not covered by warranty.
```

Obtain assistance with product repairs by contacting your local Banner Engineering Corp distributor or by calling Banner directly at (763) 544-3164. Access literature translated into your native language on the Banner website at www.bannerengineering.com or contact Banner directly at (763) 544-3164.

**Deutsch**

Wenden Sie sich zur Fehlerbehebung dieses Geräts an Banner Engineering. **Versuchen Sie nicht, Reparaturen an diesem Banner-Gerät vorzunehmen. Das Gerät enthält keine am Einsatzort auszuwechselnden Teile oder Komponenten.** Wenn ein Banner-Anwendungstechniker zu dem Schluss kommt, dass dieses Gerät, ein Teil oder eine Komponente davon defekt ist, erhalten Sie von dem Techniker Erläuterungen zu Banners RMA-Verfahren (Return Merchandise Authorization) für die Warenrückgabe.

```
WICHTIG: Wenn Sie der Techniker anweist, das Gerät zurückzusenden, verpacken Sie es bitte
sorgfältig. Transportschäden bei der Rücksendung werden von der Garantie nicht abgedeckt.
```

Unterstützung bei Produktreparaturen erhalten Sie von Ihrem örtlichen Banner Engineering Corp Händler oder direkt von Banner unter Tel. (763) 544-3164. Die in Ihre Muttersprache übersetzte Literatur finden Sie auf der Banner-Website unter www.bannerengineering.com oder kontaktieren Sie Banner direkt unter Tel. (763) 544-3164.

**Français**

Pour plus d'informations sur le dépannage du produit, contactez Banner Engineering. **Ne tentez pas de réparer ce dispositif Banner. Il ne contient aucun composant ou pièce qui puisse être remplacé sur place.** Si un ingénieur de Banner conclut que le dispositif ou l'une de ses pièces ou composants est défectueux, il vous informera de la procédure à suivre pour le retour des produits (RMA).

```
Important : Si vous devez retourner le dispositif, emballez-le avec soin. Les dégâts
occasionnés pendant le transport de retour ne sont pas couverts par la garantie.
```

Pour vous aider lors de la réparation de produits, contactez votre distributeur Banner local our appelez directement Banner au (763) 544-3164. La documentation traduite dans votre langue est disponible sur le site internet de Banner www.bannerengineering.com ou contactez directement Banner au (763) 544-3164.


© Banner Engineering Corp. All rights reserved.
www.bannerengineering.com

**Italiano**

Per le procedure di individuazione e riparazione dei guasti di questo dispositivo, contattare Banner Engineering. **Non tentare di riparare questo dispositivo Banner, in quanto non contiene parti o componenti sostituibili dall'utente.** Se il dispositivo, una parte del dispositivo o un componente del dispositivo viene riscontrato difettoso da un tecnico Banner, il nostro personale vi comunicherà la procedura da seguire per ottenere l'autorizzazione al reso.

> **Importante:** Se si ricevono istruzioni di rispedire il dispositivo al produttore, imballarlo con cura. I danni dovuti al trasporto non sono coperti dalla garanzia.

Per assistenza nelle riparazioni dei prodotti, contattare il distributore locale Banner Engineering Corp o contattare direttamente Banner al numero (763) 544-3164. È possibile accedere alla documentazione tradotta nella propria lingua madre sul sito Web Banner all'indirizzo www.bannerengineering.com o contattare direttamente Banner al numero (763) 544-3164.

**Español**

Comuníquese con Banner Engineering para solucionar de problemas de este dispositivo. **No intente ninguna reparación a este dispositivo de Banner, contiene piezas o componente que no se pueden cambiar en terreno.** Si algún ingeniero de aplicaciones de Banner determina que el dispositivo, alguna de las piezas o alguno de los componentes del dispositivo está defectuoso, le informará el procedimiento de autorización de devolución de mercancía (RMA, por sus siglas en inglés) de Banner.

> **Importante:** Si se le solicita devolver el dispositivo, empáquelo con cuidado. Puede haber daños durante el envío de devolución que no estén cubiertos por la garantía.

Para reparaciones de productos, por favor contacte a su distribuidor local de Banner Engineering o llame a Banner directamente al 00 1 (763) 544-3164. Vea la literatura traducida en su idioma en el sitio web Banner en www.bannerengineering.com o comuníquese con Banner directamente al 00 1 (763) 544-3164.

**中国人**

如需对本装置进行故障排查，请联系邦纳。**请勿尝试自行维修该邦纳装置；本装置不包含任何可在现场更换的部件或组件。** 若经邦纳应用工程师确认设备、设备部件或组件存在缺陷，他们将告知您邦纳退货授权 (RMA) 流程。

> **重要注意事项：** 如被要求退回装置，请妥善包装后寄回。退货运输过程中发生的损坏不在保修范围内。

请联系当地的 Banner Engineering Corp 经销商或直接致电 Banner +1 (763) 544-3164，以获得产品维修帮助。请访问邦纳网站 www.bannerengineering.com 或直接拨打 +1 (763) 544-3164 联系邦纳，获取翻译成您母语的资料。

**한국인**

이 장치의 문제를 해결하려면 Banner Engineering에 문의하십시오. **이 Banner 장치에는 현장에서 교체할 수 있는 부품 또는 구성품이 없으므로 수리를 시도하지 마십시오.** Banner 애플리케이션 엔지니어가 장치, 장치 부품 또는 장치 구성품에 결함이 있는 것으로 판정하면, Banner의 RMA(제품 반송 승인)절차에 대해 안내해 드립니다.

> **중요:** 제품을 반송하도록 안내 받으셨다면 잘 포장해주십시오. 반송 도중에 발생한 손상은 보증 서비스가 적용되지 않습니다.

제품 수리에 대한 지원은 지역 Banner Engineering Corp 대리점에 문의하거나 Banner에 직접 (763) 544-3164로 문의하실 수 있습니다. 사용자의 모국어로 번역된 자료는 Banner 웹사이트 www.bannerengineering.com에서 액세스하거나 Banner에 직접 (763) 544-3164로 문의하실 수 있습니다.

**日本語**

この装置のトラブルシューティングについては、バナーエンジニアリングにお問い合わせください。**このバナー装置には、現場では交換できない部品またはコンポーネントが含まれているため、修理を試みてはいけません。** バナーのアプリケーションエンジニアが装置、装置の部品、または装置のコンポーネントに欠陥があると判断した場合、バナーのRMA（返品承認）手続きについてお知らせします。

> **重要 ：** 返品を指示された場合は、装置を丁寧に梱包してください。返品時に発生した破損は保証の対象外となります。

製品の修理については、最寄りのBanner Engineering Corp代理店にお問い合わせいただくか、米国+1 (763) 544-3164まで直接お電話でお問い合わせください。バナーのウェブサイト（www.bannerengineering.com）でお客様の言語に翻訳された資料にアクセスするか、米国+1 (763) 544-3164まで直接お電話でお問い合わせください。


© Banner Engineering Corp. All rights reserved.
www.bannerengineering.com

**čeština**

Pro řešení problémů se zařízením kontaktujte společnost Banner Engineering. **Neprovádějte žádné opravy zařízení Banner. Neobsahují žádné komponenty nebo části, které by byly vyměnitelné.** Pokud je zařízení, jeho část nebo díl označen technikem společnosti Banner jako poškozený, bude Vám doporučeno vyplnit reklamační RMA protokol.

**Důležité:** Pokud byl vydán požadavek na vrácení zařízení, pečlivě ho zabalte. Poškození vzniklé při dopravě není považováno za záruční opravu.

Pokud produkt potřebuje opravu, vyžádejte si pomoc od místního distributora společnosti Banner Engineering Corp nebo přímo na telefonním čísle (763) 544-3164. Dokumentaci přeloženou do vašeho jazyka si vyhledejte na webových stránkách společnosti Banner na adrese www.bannerengineering.com nebo se obraťte přímo na společnost Banner na telefonním čísle (763) 544-3164.

**Polski**

W celu rozwiązania problemów z urządzeniem należy skontaktować się z działem technicznym firmy Banner Engineering. **Pod żadnym pozorem nie próbuj naprawiać tego urządzenia firmy Banner; nie zawiera ono części ani elementów, które można wymieniać samodzielnie.** Jeśli urządzenie, jego część lub element zostaną uznane za wadliwe przez inżyniera technicznego Banner, poinformuje on użytkownika o firmowej procedurze zwrotu towaru (RMA) firmy Banner.

**Ważne:** Jeśli urządzenie ma zostać zwrócone, należy je starannie zapakować. Uszkodzenia powstałe podczas odsyłki nie są objęte gwarancją.

Aby uzyskać pomoc w zakresie naprawy produktu, należy skontaktować się z lokalnym dystrybutorem Banner Engineering Corp lub zadzwonić bezpośrednio do firmy Banner pod numer (763) 544-3164. Dostęp do literatury przetłumaczonej na swój język ojczysty można uzyskać na stronie internetowej firmy Banner pod adresem www.bannerengineering.com lub kontaktując się bezpośrednio z firmą Banner pod numerem (763) 544-3164.

**Português**

Entre em contato com a Engenharia da Banner para a solução de problemas deste dispositivo. **Não tente fazer nenhum reparo neste dispositivo Banner; ele não contém peças ou componentes substituíveis em campo.** Se um técnico de aplicações da Banner determinar que o dispositivo, peça ou componente do dispositivo está com defeito, ele o informará sobre o procedimento de RMA (Autorização de Devolução de Mercadoria) da Banner.

**Importante:** Se for instruído a devolver o dispositivo, embale-o com cuidado. Os danos ocorridos no transporte de devolução não são cobertos pela garantia.

Obtenha assistência para reparos do produto entrando em contato com o distribuidor local da Banner Engineering Corp ou ligando diretamente para a Banner no telefone (763) 544-3164. Acesse a literatura traduzida para seu idioma nativo no site da Banner em www.bannerengineering.com ou entre em contato diretamente com a Banner pelo telefone (763) 544-3164.

**Türkçe**

Bu cihazda sorun giderme işlemleri için Banner Engineering ile iletişime geçin. **Bu Banner cihazını onarmaya çalışmayın; cihaz sahada değiştirilebilir parça veya bileşen içermez.** Bir Banner Uygulama Mühendisi tarafından cihazın, cihazın bir parçasının veya bir cihaz bileşeninin kusurlu olduğu tespit edilirse, Banner RMA (İade Mal Yetkilendirme) prosedürü hakkında bilgilendirilirsiniz.

**ÖNEMLİ:** İade etmeniz istenirse, cihazı dikkatli bir şekilde paketleyin. İade nakliyesinde meydana gelecek hasarlar garanti kapsamında değildir.

Yerel Banner Engineering Corp distribütörünüzle iletişime geçerek veya doğrudan (763) 544-3164 numaralı telefondan Banner'ı arayarak ürün onarımlarıyla ilgili yardım alın. Ana dilinize çevrilmiş dokümanlara www.bannerengineering.com adresindeki Banner web sitesinden erişebilir veya (763) 544-3164 numaralı telefondan doğrudan Banner ile iletişime geçebilirsiniz.

# Discontinued Models

The following models are no longer available for order but are still covered by the information in this document.

*Opposed mode models*

| Model | Effective Beam | Output | Connection |
|---|---|---|---|
| QS186EV W/30 | Effective beam: 13 mm (0.5 inch)<br>Range: 20 m (66 ft) | — | 9 m cable |
| QS186E W/30<br>(940 nm Infrared) | | — | 9 m cable |
| QS18VN6R W/30 | | NPN | 9 m cable |

Continued on page 27


© Banner Engineering Corp. All rights reserved.
www.bannerengineering.com

Continued from page 26

| Model | Effective Beam | Output | Connection |
|---|---|---|---|
| QS18VN6RQ7 | | NPN | 4-pin M8 male QD |
| QS18VN6RB W/30 | Effective beam: 13 mm (0.5 inch)<br>Range: 3 m (10 ft) | NPN | 9 m cable |
| QS18VN6RBQ | | NPN | 150 mm (6 in) cable with a 4-pin M8 QD |
| QS18VN6RBQ7 | | NPN | 4-pin M8 male QD |

*Polarized retroreflective mode models (630 nm visible red)*

| Model | Range | Output | Connection |
|---|---|---|---|
| QS18VN6LP W/30 | 3.5 m (12 ft) | NPN | 9 m cable |

*Retroreflective mode models (628 nm visible red)*

| Model | Range | Output | Connection |
|---|---|---|---|
| QS18VN6LVQ7 | 6.5 m (21 ft) | NPN | 4-pin M8 male QD |

*Convergent mode models (630 nm visible red)*

| Model | Range | Output | Connection |
|---|---|---|---|
| QS18VN6CV15 W/30 | 16 mm (0.63 in) | NPN | 9 m cable |
| QS18VN6CV15Q7 | | NPN | 4-pin M8 male QD |
| QS18VP6CV15 W/30 | | PNP | 9 m cable |
| QS18VP6CV15Q7 | | PNP | 4-pin M8 male QD |
| QS18VN6CV45 W/30 | 43 mm (1.7 in) | NPN | 9 m cable |
| QS18VN6CV45Q7 | | NPN | 4-pin M8 male QD |
| QS18VP6CV45Q7 | | PNP | 4-pin M8 male QD |

*Diffuse mode models*

| Model | Diffuse Mode | Range | Output | Connection |
|---|---|---|---|---|
| QS18VN6DQ7 | 940 nm Infrared | 450 mm (18 in) | NPN | 4-pin M8 male QD |
| QS18VN6DL W/30 | | 600 mm (24 in) | NPN | 9 m cable |
| QS18VN6DLQ7 | | | NPN | 4-pin M8 male QD |
| QS18VN6DVSQ | 630 nm Visible red | 250 mm (10 in) | NPN | 150 mm (6 in) cable with a 4-pin M8 QD |
| QS18VN6DVSQ7 | | | NPN | 4-pin M8 male QD |
| QS18VN6DB W/30 (Wide) | Infrared | 450 mm (18 in) | NPN | 9 m cable |
| QS18VN6DBQ7 | | | NPN | 4-pin M8 male QD |
| QS18VP6DB W/30 (Wide) | | | PNP | 9 m cable |

*Divergent mode models (940 nm infrared)*

| Model | Range | Output | Connection |
|---|---|---|---|
| QS18VN6W W/30 | 100 mm (4 in) | NPN | 9 m cable |
| QS18VP6W W/30 | | PNP | 9 m cable |


© Banner Engineering Corp. All rights reserved.
www.bannerengineering.com

*Fixed-field mode models (630 nm visible red)*

| Model | Range | Output | Connection |
|---|---|---|---|
| QS18VP6FF50Q7 | 50 mm (2 in) | PNP | 4-pin M8 male QD |
| QS18VN6FF100Q | 100 mm (4 in) | NPN | 150 mm (6 in) cable with a 4-pin M8 QD |
| QS18VN6FF100Q7 | | NPN | 4-pin M8 male QD |
| QS18VN6FF150 W/30 | 150 mm (6 in) | NPN | 9 m cable |
| QS18VN6FF150Q | | NPN | 150 mm (6 in) cable with a 4-pin M8 QD |
| QS18VN6FF150Q7 | | NPN | 4-pin M8 male QD |

*Plastic fiber optic mode models (660 nm visible red)*

| Model | Range | Output | Connection |
|---|---|---|---|
| QS18VN6FP W/30 | Range varies by sensing mode and fiber optics used | NPN | 9 m cable |
| QS18VP6FP W/30 | | PNP | 9 m cable |

*Glass fiber optic mode models (940 nm infrared)*

| Model | Range | Output | Connection |
|---|---|---|---|
| QS18VN6F | Range varies by sensing mode and fiber optics used | NPN | 2 m (6.5 ft) cable |
| QS18VN6F W/30 | | NPN | 9 m cable |
| QS18VN6FQ | | NPN | 150 mm (6 in) cable with a 4-pin M8 QD |
| QS18VP6F W/30 | | PNP | 9 m cable |

# Contact Us

Banner Engineering Corp. | 9714 Tenth Avenue North | Plymouth, MN 55441, USA | Phone: + 1 888 373 6767

For worldwide locations and local representatives, visit www.bannerengineering.com.

# Banner Engineering Corp Limited Warranty

Banner Engineering Corp. warrants its products to be free from defects in material and workmanship for one year following the date of shipment. Banner Engineering Corp. will repair or replace, free of charge, any product of its manufacture which, at the time it is returned to the factory, is found to have been defective during the warranty period. This warranty does not cover damage or liability for misuse, abuse, or the improper application or installation of the Banner product.

**THIS LIMITED WARRANTY IS EXCLUSIVE AND IN LIEU OF ALL OTHER WARRANTIES WHETHER EXPRESS OR IMPLIED (INCLUDING, WITHOUT LIMITATION, ANY WARRANTY OF MERCHANTABILITY OR FITNESS FOR A PARTICULAR PURPOSE), AND WHETHER ARISING UNDER COURSE OF PERFORMANCE, COURSE OF DEALING OR TRADE USAGE.**

This Warranty is exclusive and limited to repair or, at the discretion of Banner Engineering Corp., replacement. **IN NO EVENT SHALL BANNER ENGINEERING CORP. BE LIABLE TO BUYER OR ANY OTHER PERSON OR ENTITY FOR ANY EXTRA COSTS, EXPENSES, LOSSES, LOSS OF PROFITS, OR ANY INCIDENTAL, CONSEQUENTIAL OR SPECIAL DAMAGES RESULTING FROM ANY PRODUCT DEFECT OR FROM THE USE OR INABILITY TO USE THE PRODUCT, WHETHER ARISING IN CONTRACT OR WARRANTY, STATUTE, TORT, STRICT LIABILITY, NEGLIGENCE, OR OTHERWISE.**

Banner Engineering Corp. reserves the right to change, modify or improve the design of the product without assuming any obligations or liabilities relating to any product previously manufactured by Banner Engineering Corp. Any misuse, abuse, or improper application or installation of this product or use of the product for personal protection applications when the product is identified as not intended for such purposes will void the product warranty. Any modifications to this product without prior express approval by Banner Engineering Corp will void the product warranties. All specifications published in this document are subject to change; Banner reserves the right to modify product specifications or update documentation at any time. Specifications and product information in English supersede that which is provided in any other language. For the most recent version of any documentation, refer to: www.bannerengineering.com.

For patent information, see www.bannerengineering.com/patents.


© Banner Engineering Corp. All rights reserved.
www.bannerengineering.com

LinkedIn

X

Facebook

Instagram




© 2026. All rights reserved.