# Sliding Handle Actuator for SI-GL42
# Instruction Manual

Original Instructions
p/n: 222121 Rev. B
November 17, 2023
© Banner Engineering Corp. All rights reserved.

ПРОМЭЛЕКТРОНИКА/ sales@prom-elec.com

# Contents


## Chapter 1 Product Overview

Models ..... 3
Important… Read this before proceeding! ..... 3
Overview ..... 4

## Chapter 2 Installation Instructions

Installation Requirements ..... 5
Mechanical Installation ..... 6
Sliding Handle Assembly ..... 6
Base Plate Assembly of the SI-QM-SSA-SH ..... 7
Base Plate Assembly of the SI-QM-SSA-SHER ..... 8
Escape Release Handle, SI-QM-SSA-SHER-ERH-1 ..... 8
Stopping Plate ..... 9

## Chapter 3 Operating Instructions

Checkout Procedures ..... 11
Checks ..... 11

## Chapter 4 Specifications

Dimensions ..... 14

## Chapter 5 Replacement Parts ..... 19

## Chapter 6 Product Support and Maintenance

Repairs ..... 21
Contact Us ..... 21
Banner Engineering Corp. Limited Warranty ..... 21

Chapter Contents

Models ..... 3
Important… Read this before proceeding! ..... 3
Overview ..... 4

# Chapter 1 Product Overview

The Sliding Handle Actuator is used in conjunction with locking safety interlocks.

Specifically, it is used with the SI-GL42 series of interlocks. Go to www.bannerengineering.com and search for the SI-GL42 instruction manual, p/n 220476, for more information on this Safety Interlock series.

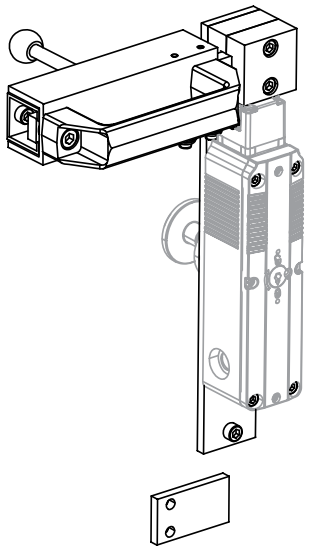

- Designed to work with the SI-GL42 series of Safety Interlocks
- Designed to work with the SI-QM-SSA-2 straight actuator
- Designed for use on both right- and left-hinged doors
- Models are available with an escape release mechanism, SI-GL42-ERBD-SH-1, and emergency release lever, SI-QM-SSA-SHER-ERH-1

## Models

A complete safety system is typically made up of two interlocks, two actuators, two cables and a safety monitoring device. The Sliding Handle Actuator attaches to the SI-QM-SSA-2 actuator, which then mates with the interlock. The SI-QM-SSA-2 actuator and SI-GL42 series interlock are ordered separately from the Sliding Handle Actuator.

| Model | Escape Release and Lever Mechanisms | Works with Series |
|---|---|---|
| **SI-QM-SSA-SH** | - | **SI-GL42** |
| **SI-QM-SSA-SHER** | Included | |

## Important… Read this before proceeding!

**The user is responsible for satisfying all local, state, and national laws,** rules, codes, and regulations relating to the use of this product and its application. Banner Engineering Corp. has made every effort to provide complete application, installation, operation, and maintenance instructions. Please contact a Banner Applications Engineer with any questions regarding this product.

The user is responsible for making sure that all machine operators, maintenance personnel, electricians, and supervisors are thoroughly familiar with and understand all instructions regarding the installation, maintenance, and use of this product, and with the machinery it controls. The user and any personnel involved with the installation and use of this product must be thoroughly familiar with all applicable standards, some of which are listed **within these specifications and the specifications for the SI-GL42**. Banner Engineering Corp. makes no claims regarding a specific recommendation of any organization, the


© Banner Engineering Corp. All rights reserved.

accuracy of effectiveness of any information provided, or the appropriateness of the provided information for a specific application.

# Overview

In combination with the safety interlock switch, the Sliding Handle Actuator serves as a mechanical guard interlock in accordance with EN ISO 12100 and EN ISO 14119. The Sliding Handle Actuator can be ordered with an emergency escape release, SI-GL42-ERBD-SH-1, that can be operated from the danger zone.

With the Sliding Handle Actuator on the swinging guard, the mounted SI-QM-SSA-2 actuator is pushed into or pulled out of the safety interlocking device. When the swinging guard is closed, the bolt of the Sliding Handle Actuator can move into the bolt receptacle on the base plate. This ensures optimum insertion of the actuator into the head of the safety interlock, even for guards that are not optimally aligned. This secures the guard against high forces in the opening direction.

The Sliding Handle Actuator and base plate are designed in such a way that the actuator can be inserted into the safety interlock only when the guard is closed. In the open position, the moveable bolt has a detent to prevent unintentional closing of the bolt.

The bolt of the Sliding Handle Actuator has three holes in it so that padlocks can be attached to the bolt. This can prevent unauthorized or unintended closing of the safety guard when operators are inside the hazardous area.

Applications that use the Sliding Handle Actuator in conjunction with SI-GL42 series Safety Interlocks should take into consideration the following standards:

- EN ISO 13849-1:2015 Safety-Related Parts of Control Systems
- EN ISO 12100 Safety of Machinery – General Principles for Design — Risk Assessment and Risk Reduction
- ISO 14119 (EN 1088) Interlocking Devices Associated with Guards – Principles for Design and Selection
- ISO 13857 Safety of Machinery – Safety Distances to Prevent Hazard Zones Being Reached
- ANSI B11.0 Safety of Machinery, General Requirements, and Risk Assessment
- ANSI B11.19 Performance Criteria for Safeguarding

© Banner Engineering Corp. All rights reserved.

Chapter Contents

Installation Requirements ..... 5
Mechanical Installation ..... 6

# Chapter 2 Installation Instructions

## Installation Requirements

The following general requirements and considerations apply to the installation of interlocked guards for the purpose of safeguarding. In addition, the user must refer to the relevant regulations and comply with all necessary requirements. See ANSI B11.19, or ISO 14119 and ISO 14120, or the appropriate standard.

Hazards guarded by the interlocked guard must be prevented from operating until the guard is closed; a stop command must be issued to the guarded machine if the guard opens while the hazard is present. Closing the guard must not, by itself, initiate hazardous motion; a separate procedure must be required to initiate the motion. The safety interlock switch must not be used as a mechanical or end-of-travel stop.

Locate the guard an adequate distance from the danger zone (so the hazard has time to stop before the guard is opened sufficiently to provide access to the hazard). The guard must open either laterally or away from the hazard, not into the safeguarded area. The guard also should not be able to close by itself and activate the interlocking circuitry. The installation must prevent personnel from reaching over, under, around or through the guard to access the hazard. Any openings in the guard must not allow access to the hazard—see ANSI B11.19, ISO 13857, or the appropriate standard.

The guard must be strong enough and designed to protect personnel and contain hazards within the guarded area that can be ejected, dropped, or emitted by the machine. Design and install the safety switches and actuators so that they cannot be easily defeated. Measures to minimize defeat (bypassing) of interlocking safety switches include:

- Minimizing motivation for defeating interlocking by providing training, supervision, and efficient means for machine setup/adjustment, operation, and maintenance
- Limiting accessibility to the interlocking device, such as mounting out of reach, mounting behind a physical obstruction, mounting in a concealed position
- Mounting them securely so that their physical position cannot shift, using reliable fasteners that require a tool to remove
- Preventing the switch or the actuator from being disassembled or repositioned that compromises the safety function (for example, welding, one-way screws, riveting)

**WARNING:**

- **Properly Install the Interlocked Guards**
- Failure to follow these guidelines could result in serious injury or death.
- At a minimum, the interlocked guard must prevent hazards when not fully closed and must prevent access to the hazards through any opening in the guard.
- Install the safety switches and actuators so they cannot be easily defeated and are not used as a mechanical or end-of-travel stop. Mount at least one switch in a positive mode and verify it opens the normally closed contact when the guard opens.
- The user must refer to the relevant regulations and comply with all necessary requirements. See ANSI B11.19, or ISO 14119 and ISO 14120, or the appropriate standard.

**CAUTION:**

- **Do not use the safety switch as a mechanical or end-of-travel stop.**
- Catastrophic damage can cause the safety switch to fail in an unsafe manner (that is, loss of the switching action).
- Limit the movement or rotation of the guard to prevent damage to the safety switch or the actuator.


© Banner Engineering Corp. All rights reserved.

**WARNING:**

- **The hazard must be accessible only through the sensing field**
- Incorrect system installation could result in serious injury or death.
- The installation of the SI-GL42 Interlock Switch must prevent any individual from reaching around, under, over or through the defined area and into the hazard without being detected.
- See OSHA CFR 1910.217, ANSI B11.19, and/or ISO 14119, ISO 14120, and ISO 13857 for information on determining safety distances and safe opening sizes for your guarding device. Mechanical barriers (for example, hard (fixed) guarding) or supplemental safeguarding might be required to comply with these requirements.

All screw connections must be secured with the supplied thread locking adhesive to prevent loosening due to temperature changes and/or vibrations. This adhesive can be used to ensure the mounting screws do not loosen during machine operation. Other means can also be used to ensure the mounting hardware does not loosen during machine operation.

The distance between door and frame corresponds to the distance between base plate and sliding handle assembly: 15 mm (see "Dimensions" on page 14).

The minimum screw depth of the screws used to mount the base plate and sliding handle assembly: 6 mm.

# Mechanical Installation

The system consists of two primary parts:

- The sliding handle assembly that is installed on the safety guard.
- The base plate assembly upon which the solenoid interlock switch and bolt receptacle are attached. The base plate is mounted to the frame of the safety guard.

The SI-QM-SSA-2 actuator is attached to the sliding handle assembly so that it engages with the interlocking switch when the bolt of the sliding handle engages into the bolt receptacle.

## Sliding Handle Assembly

The sliding handle assembly is preassembled. The assembly is made up of the following parts:

| | Quantity | Description |
|---|---|---|
| 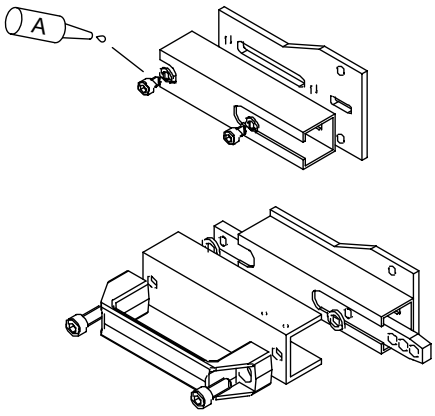 | 1 | Bolt |
| | 1 | Bolt base (u-shaped) |
| | 1 | Bolt housing |
| | 1 | Handle |
| | 2 | Handle to bolt base washer |
| | 2 | Handle attaching screws (M8 × 20) |
| | 2 | Mounting plate washer (6.4 × 11 × 1.6) |
| | 2 | Mounting plate assembly screw (M6 × 8) |
| | 1 | Mounting plate |

The SI-QM-SSA-2 actuator is attached to the side of the sliding handle assembly with the supplied components. Do not tighten the actuator mounting screws until the full assembly is mounted and tested to make sure the alignment is correct. After it is aligned, securely tighten the screws in place. The components that are supplied for the Sliding Handle Actuator Assembly installation include the following (except for the SI-QM-SSA-2 which must be ordered separately):

© Banner Engineering Corp. All rights reserved.

| | Identifier | Quantity | Description |
|---|---|---|---|
| 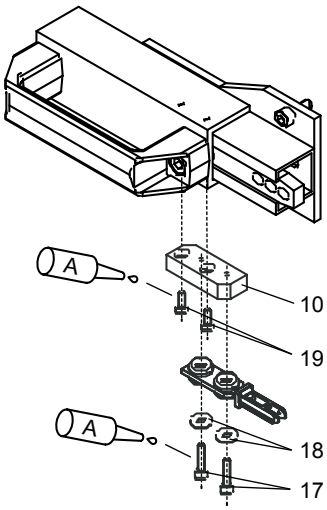 | n/a | 1 | Sliding Handle Assembly |
| | 10 | 1 | Actuator Adapter Plate |
| | 19 | 2 | Actuator Adapter Mounting Screw (M4 × 10) |
| | n/a | 1 | SI-QM-SSA-2 Actuator |
| | 18 | 2 | Actuator Mounting Washer (4.3 × 12 × 1) |
| | 17 | 2 | Actuator Mounting Screw (M4 × 18) |
| | A | 1 | Thread Lock Adhesive |

The actuator can be attached to either side of the sliding handle assembly depending on the guard hinge orientation to which the handle is mounted (right- or left-hinged).

The sliding handle assembly is attached to the guard via the two supplied M6 × 16 screws. A mating threaded hole or nut must be supplied by the user. Tighten these M6 screws to 4 N·m.

## Base Plate Assembly of the SI-QM-SSA-SH

Before attaching the SI-GL42 Interlock Switch (ordered separately) to the base plate, the head of the SI-GL42 must be rotated 90 degrees. To rotate the head:

1. Remove the four screws that attach the actuator head to the body.
2. Turn the actuator head to the desired direction.
3. Reinsert the four screws and torque to 1.6 N·m.

See the SI-GL42 Instruction Manual, 220476, for more detailed instructions.

The following components are supplied for the Base Plate Assembly (except for the SI-GL42 series Interlock which must be ordered separately):

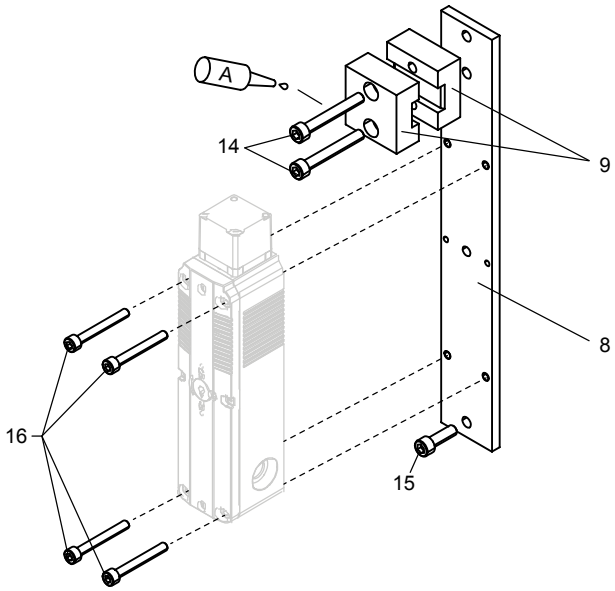



© Banner Engineering Corp. All rights reserved.

| Identifier | Quantity | Description |
|---|---|---|
| 8 | 1 | Base plate (interlock mounting plate) |
| 9 | 1 | Bolt Receptacle |
| A | 1 | Thread Lock Adhesive |
| 14 | 2 | Bolt Receptacle/base plate mounting screw (M6 × 40) |
| 15 | 1 | Base Plate Mounting Screw (M6 × 22) |
| 16 | 4 | Interlock Mounting Screw (M5 × 40) |
| n/a | 1 | SI-GL42 Series Interlock |

The SI-GL42 series interlock is attached to the base plate using the four M5 × 40 interlock mounting screws (#16). The base plate has four threaded holes to accept these screws. Tighten these M5 screws to 2 N·m.

The base plate assembly is attached to the guard frame using the three supplied M6 screws. A mating threaded hole or nut must be supplied by the user. Insert the two M6 × 40 bolt receptacle mounting screws (#14) through the two halves of the bolt receptacle (#9), then through the base plate (#8) to secure both parts in place. The single M6 × 22 base plate mounting screw (#15) secures the bottom of the base plate to the frame. Tighten these M6 screws to 4 N·m.

## Base Plate Assembly of the SI-QM-SSA-SHER

The mounting process of the base plate of the SI-QM-SSA-SHER is nearly identical to the mounting of the SI-QM-SSA-SH base plate. Two extra parts are supplied for the base plate with the SHER. These parts are base plate mounting spacers (#200). If the mounting surface does not have clearance for the Escape Release mechanism, SI-GL42-ERBD-SH-1, (#20) to mount to the underside of the base plate, use these spacers to provide clearance for the housing of the escape release mechanism. The spacers go between the base plate and the mounting surface (the supplied mounting screws pass through them, securing the entire assembly in place).

*Base Plate Assembly of the SI-QM-SSA-SHER*

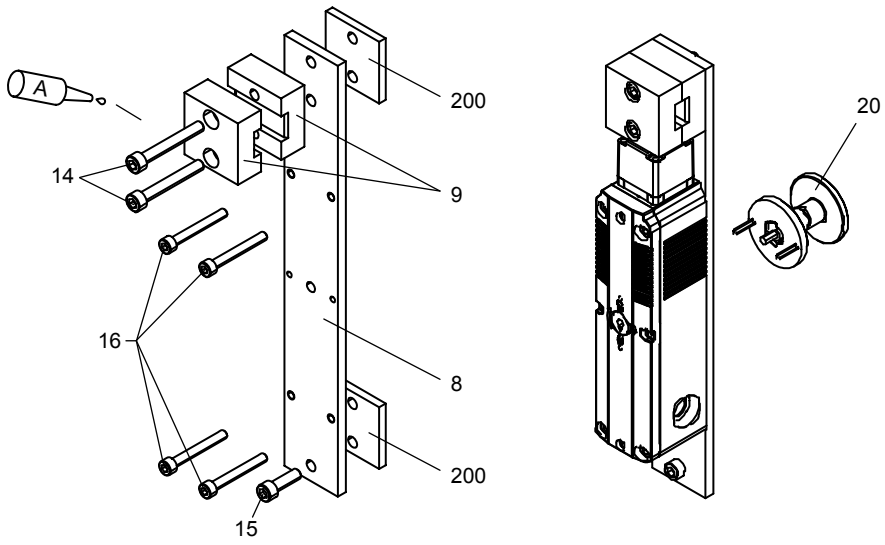


The escape release mechanism attaches through the back of the base plate to the SI-GL42 series interlock. The escape release mechanism comes in two halves so that only a drilled hole is needed in the mounting surface. The diameter of the shaft of the escape release mechanism is 13 mm.

## Escape Release Handle, SI-QM-SSA-SHER-ERH-1

An escape release handle (21) and washer (22) are supplied with the SI-QM-SSA-SHER.

These parts are attached to the bottom of the sliding handle assembly to allow someone inside to remove the bolt and actuator so that the door can be opened. A slot similar in size to the slot on the bottom of the sliding handle assembly must be provided in the guard so that the handle can be used to remove the bolt from the bolt receptacle.

© Banner Engineering Corp. All rights reserved.

*Escape Release Handle*

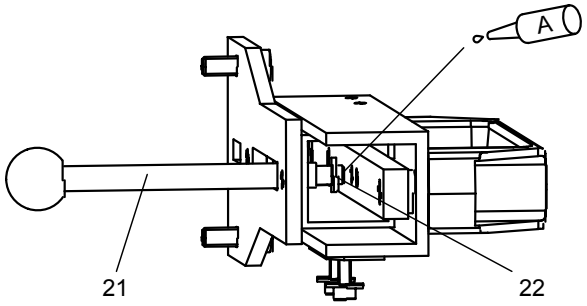


## Stopping Plate

The system includes a stopping plate that can be mounted on the guard to assist in the alignment of the Sliding Handle Actuator and the Base Plate assembly. It can be used as a stop for the guard to ensure the bolt of the sliding handle is aligned with the bolt receptacle on the base plate.

*Stopping Plate*

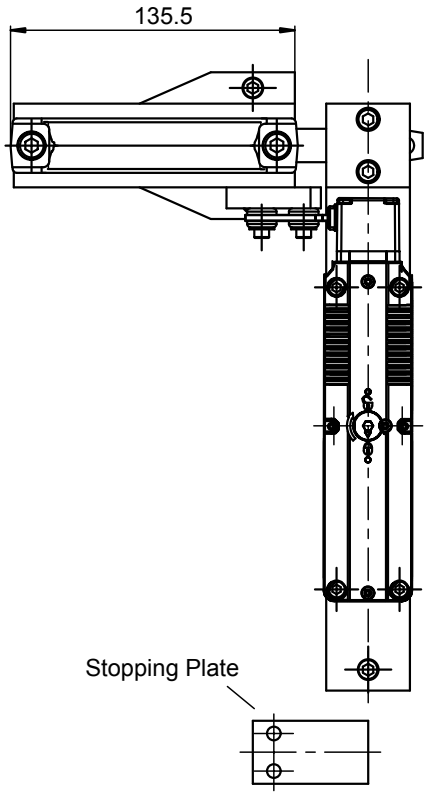



© Banner Engineering Corp. All rights reserved.

Blank page

Chapter Contents

Checkout Procedures ..... 11

# Chapter 3 Operating Instructions

## Checkout Procedures

Banner Engineering highly recommends performing the System checkouts as described. However, a Qualified Person (or team) should evaluate these generic recommendations considering their specific application and determine the appropriate frequency of checkouts. This will generally be determined by a risk assessment, such as the one contained in ANSI B11.0. The result of the risk assessment will drive the frequency and content of the periodic checkout procedures and must be followed.

### Checks

Verify the functioning of the safety switch(es) and the interlocked guard (if applicable) at designated periods.

Verify at initial installation by a qualified person, verify daily or before each use by a designated person, and as part of the regular periodic checkout procedure listed to ensure proper operation.

A qualified person possesses a recognized degree or certificate or has extensive knowledge, training, and experience to be able to solve problems relating to the safety switch installation. A designated person is identified in writing by the employer as being appropriately trained to perform a specified checkout procedure.

To assure a failure free and long service life the following checks must be carried out at regular intervals:

- Sliding surface lubrication (sliding unit should be lubricated regularly with grease)
- Firm fit of components
- Mounting hardware has not loosened
- Assured locking function
- Traces of wear

In cases of heavy wear, the unit must be replaced.


© Banner Engineering Corp. All rights reserved.

Blank page

Chapter Contents

Dimensions..... 14

# Chapter 4 Specifications

**Materials**

Handle: Black polyamide

Sliding bolt: Galvanized steel

Base plate, bolt receptacle, handle carrier pieces, etc: Aluminum

**Mechanical Life**

$1 \times 10^6$ cycles

**Weight**

Approximately 0.9 kg

**Torques**

M4 Screws: 1.5 N·m

M5 Screws: 2 N·m

M6 Screws: 4 N·m

M8 Screws: 2.5 N·m

**Separation Distance**

Base plate to sliding handle mounting plate: 15 mm



© Banner Engineering Corp. All rights reserved.

# Dimensions

All measurements are listed in millimeters [inches], unless noted otherwise.

*SI-QM-SSA-SH Left Hinge*

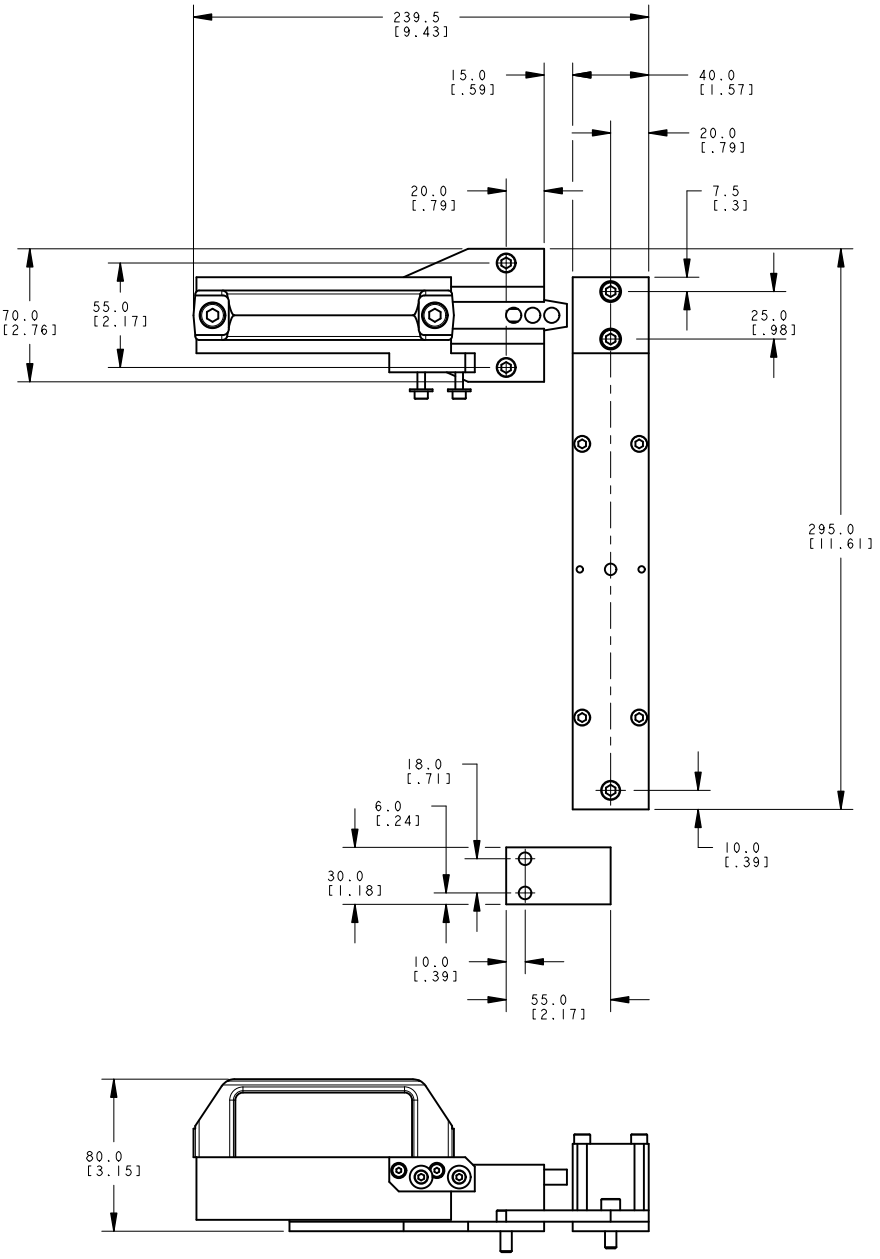




© Banner Engineering Corp. All rights reserved.

*SI-QM-SSA-SH Right Hinge*

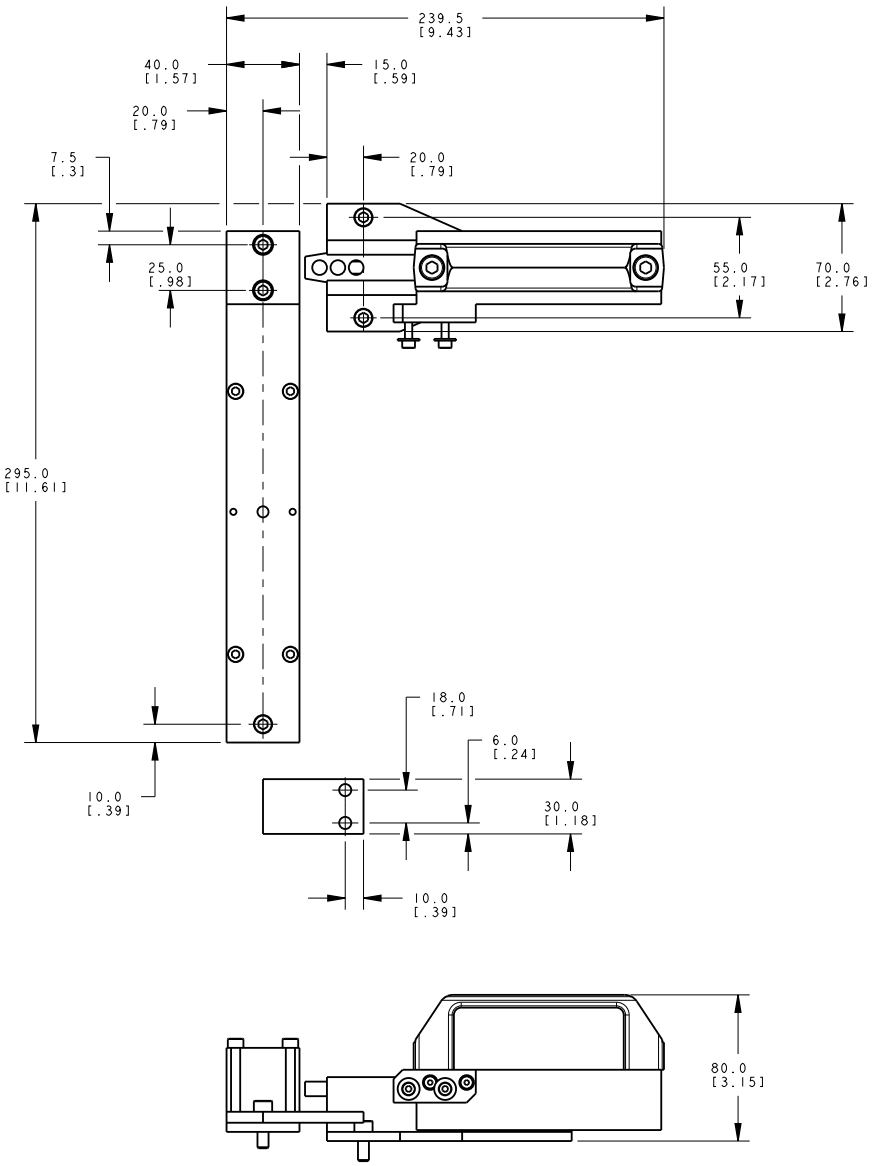



© Banner Engineering Corp. All rights reserved.

*SI-QM-SSA-SHER Left Hinge*

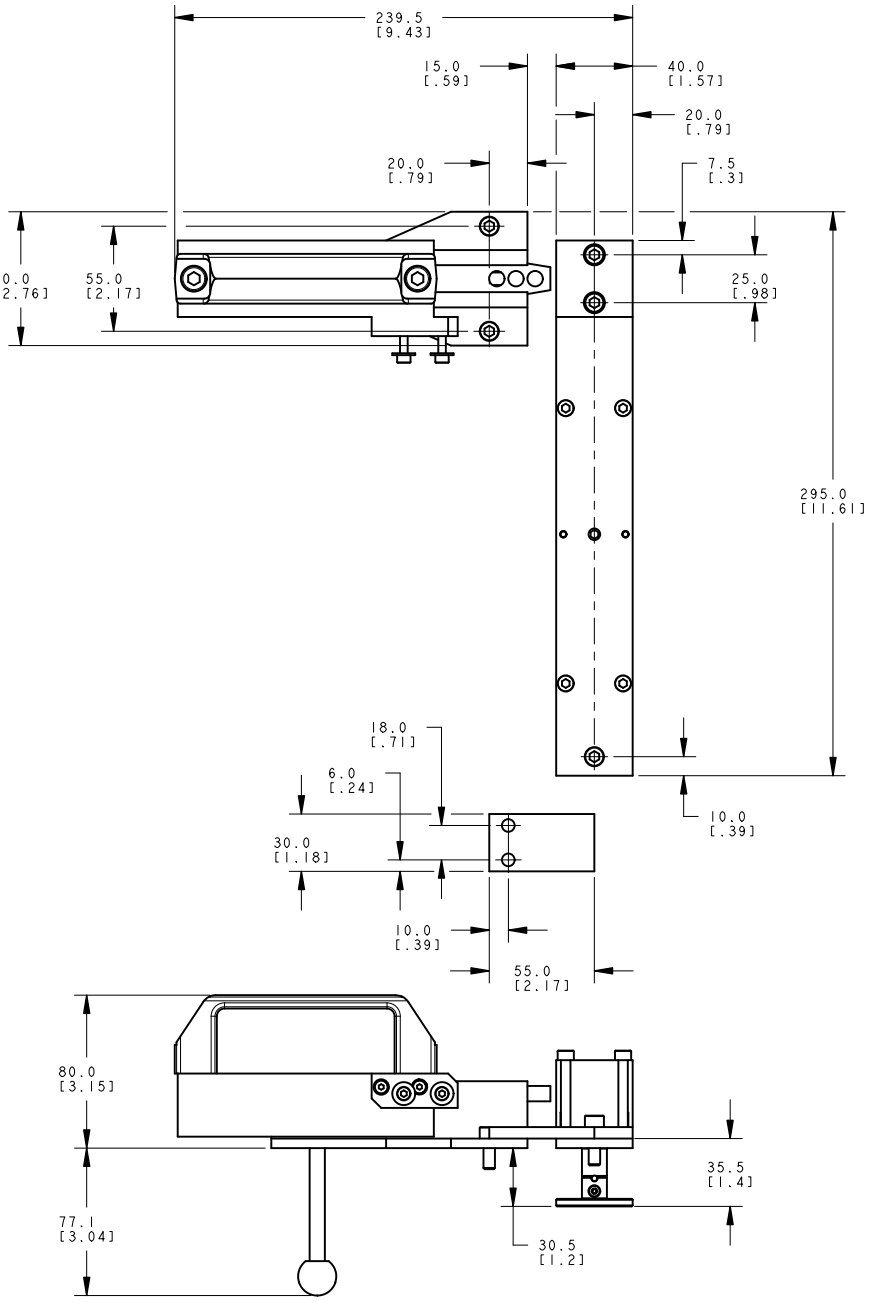


© Banner Engineering Corp. All rights reserved.

*SI-QM-SSA-SHER Right Hinge*

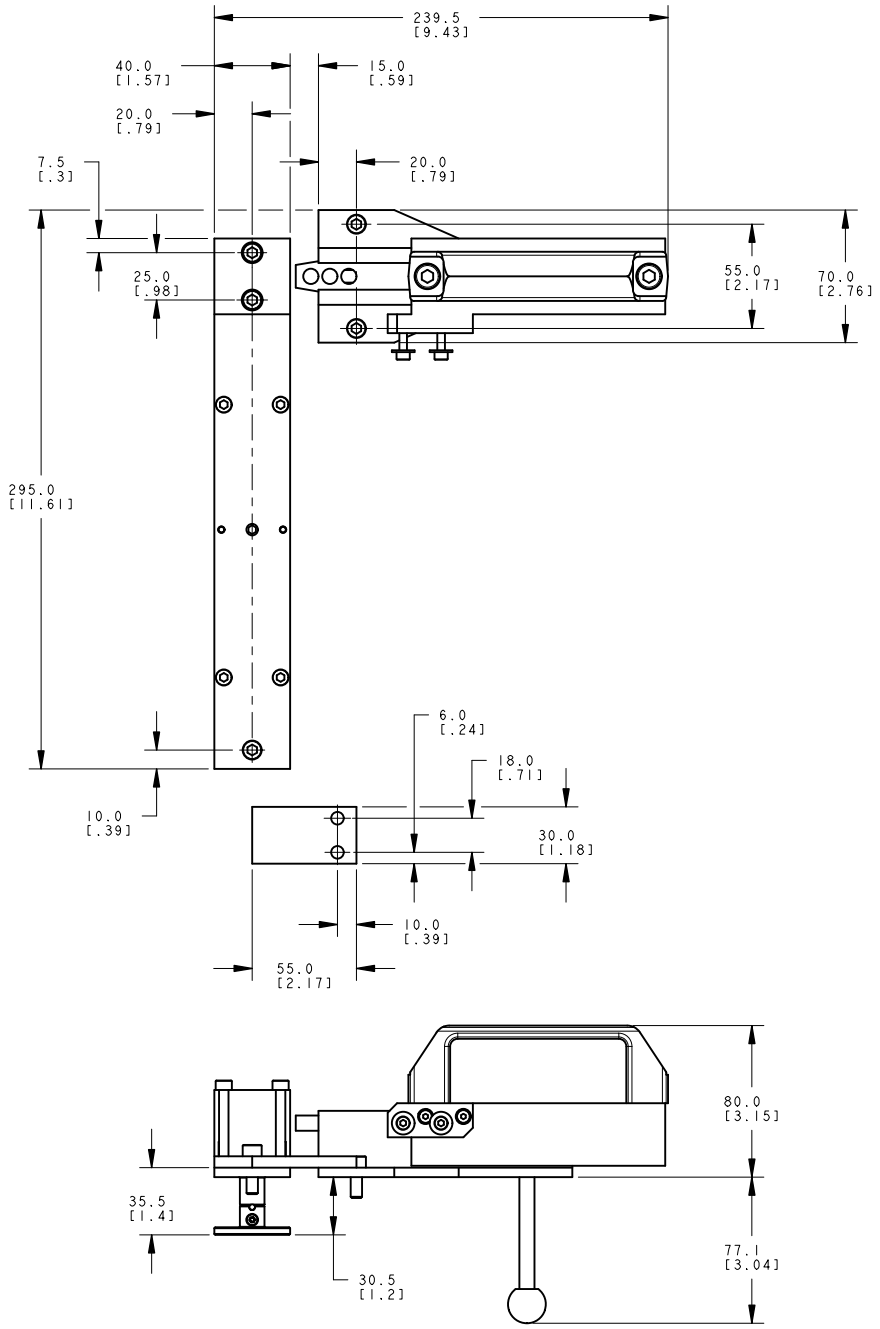



© Banner Engineering Corp. All rights reserved.

Blank page

Chapter Contents

# Chapter 5 Replacement Parts

The following replacement parts are available.

| Model Number | Description |
|---|---|
| SI-GL42-ERBD-SH-1 | Back Mount Escape Release Mechanism for Sliding Handle Assembly |
| SI-QM-SSA-SHER-ERH-1 | Release handle for Sliding Handle Assembly |


© Banner Engineering Corp. All rights reserved.

Blank page

Chapter Contents

Repairs ..... 21
Contact Us ..... 21
Banner Engineering Corp. Limited Warranty ..... 21

# Chapter 6 Product Support and Maintenance

## Repairs

**Do not attempt any repairs to the safety interlocking switch. It contains no field-replaceable components. Return it to Banner Engineering for warranty repair or replacement.**

Contact Banner Factory Application Engineering. They will attempt to troubleshoot the system from your description of the problem. If they conclude that a component is defective, they will issue a return merchandise authorization (RMA) number for your paperwork, and give you the proper shipping address.

## Contact Us

Banner Engineering Corp. headquarters is located at: 9714 Tenth Avenue North | Minneapolis, MN 55441, USA | Phone: + 1 888 373 6767

For worldwide locations and local representatives, visit www.bannerengineering.com.

## Banner Engineering Corp. Limited Warranty

Banner Engineering Corp. warrants its products to be free from defects in material and workmanship for one year following the date of shipment. Banner Engineering Corp. will repair or replace, free of charge, any product of its manufacture which, at the time it is returned to the factory, is found to have been defective during the warranty period. This warranty does not cover damage or liability for misuse, abuse, or the improper application or installation of the Banner product.

**THIS LIMITED WARRANTY IS EXCLUSIVE AND IN LIEU OF ALL OTHER WARRANTIES WHETHER EXPRESS OR IMPLIED (INCLUDING, WITHOUT LIMITATION, ANY WARRANTY OF MERCHANTABILITY OR FITNESS FOR A PARTICULAR PURPOSE), AND WHETHER ARISING UNDER COURSE OF PERFORMANCE, COURSE OF DEALING OR TRADE USAGE.**

This Warranty is exclusive and limited to repair or, at the discretion of Banner Engineering Corp., replacement. **IN NO EVENT SHALL BANNER ENGINEERING CORP. BE LIABLE TO BUYER OR ANY OTHER PERSON OR ENTITY FOR ANY EXTRA COSTS, EXPENSES, LOSSES, LOSS OF PROFITS, OR ANY INCIDENTAL, CONSEQUENTIAL OR SPECIAL DAMAGES RESULTING FROM ANY PRODUCT DEFECT OR FROM THE USE OR INABILITY TO USE THE PRODUCT, WHETHER ARISING IN CONTRACT OR WARRANTY, STATUTE, TORT, STRICT LIABILITY, NEGLIGENCE, OR OTHERWISE.**

Banner Engineering Corp. reserves the right to change, modify or improve the design of the product without assuming any obligations or liabilities relating to any product previously manufactured by Banner Engineering Corp. Any misuse, abuse, or improper application or installation of this product or use of the product for personal protection applications when the product is identified as not intended for such purposes will void the product warranty. Any modifications to this product without prior express approval by Banner Engineering Corp will void the product warranties. All specifications published in this document are subject to change; Banner reserves the right to modify product specifications or update documentation at any time. Specifications and product information in English supersede that which is provided in any other language. For the most recent version of any documentation, refer to: www.bannerengineering.com.

For patent information, see www.bannerengineering.com/patents.


© Banner Engineering Corp. All rights reserved.

LinkedIn

Twitter

Facebook




© 2023. All rights reserved.
www.bannerengineering.com