# A-GAGE® MINI-ARRAY® TWO Piece Measuring Light Screen 3/8in

## Quick Start Guide

*A-GAGE MINI-ARRAY Two-Piece Measuring Light Screen with 9.5 mm (3/8 inch) Beam Spacing*

This guide is designed to help you set up and install the A-GAGE MINI-ARRAY Two-Piece Measuring Light Screen. For complete information on programming, performance, troubleshooting, dimensions, and accessories, please refer to the Instruction Manual at *www.bannerengineering.com*. Search for p/n 196876 to view the Instruction Manual. Use of this document assumes familiarity with pertinent industry standards and practices.

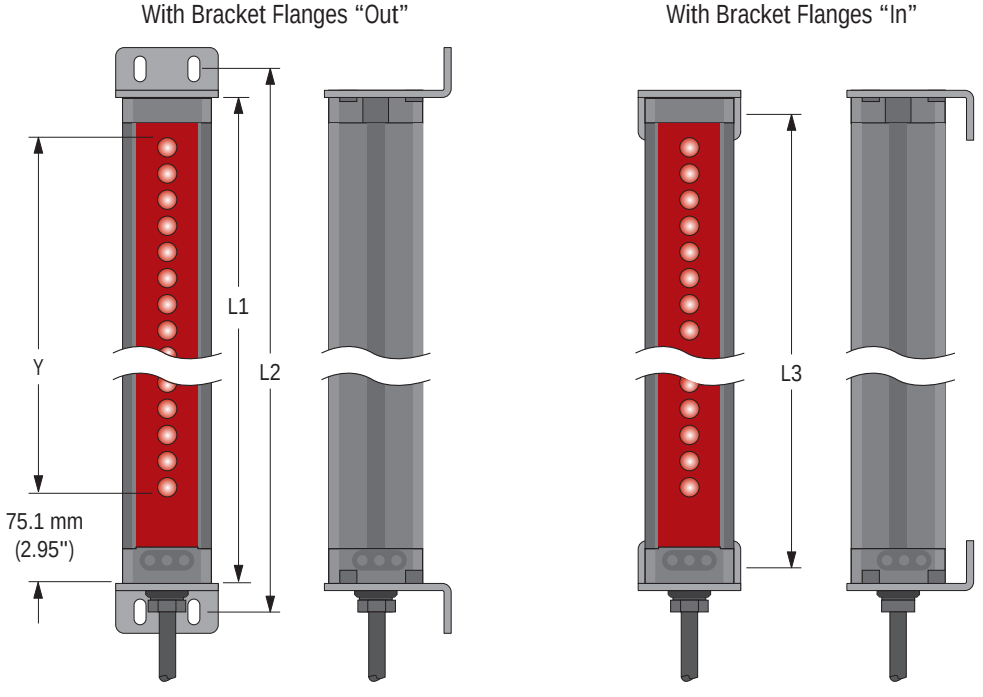


WARNING: Not To Be Used for Personnel **Protection**

Never use this device as a sensing device for personnel **protection.** Doing so could lead to serious injury or death. This device does not include the self-checking redundant circuitry necessary to allow its use in personnel safety applications. A sensor failure or malfunction can cause either an energized or de-energized sensor output condition.

## Models

| **Emitter/Receiver** Models | Array Length (Y) | Housing Length (L1) | Distance Between Bracket Holes | | Total Beams | Sensor Scan Time [1] | |
|---|---|---|---|---|---|---|---|
| | | | L2 | L3 | | Interlaced Scan | Straight Scan |
| MAE632Q **Emitter**<br>MAR632NX485Q Receiver | 143 mm (5.6 in) | 231 mm (9.1 in) | 262 mm (10.3 in) | 205 mm (8.1 in) | 16 | 2.5 ms | 1.5 ms |
| MAE1232Q **Emitter**<br>MAR1232NX485Q Receiver | 295 mm (11.62 in) | 384 mm (15.1 in) | 414 mm (16.3 in) | 357 mm (14.1 in) | 32 | 4.8 ms | 2.6 ms |
| MAE1832Q **Emitter**<br>MAR1832NX485Q Receiver | 448 mm (17.62 in) | 536 mm (21.1 in) | 567 mm (22.3 in) | 510 mm (20.1 in) | 48 | 7.0 ms | 3.7 ms |
| MAE2432Q **Emitter**<br>MAR2432NX485Q Receiver | 600 mm (23.62 in) | 689 mm (27.1 in) | 719 mm (28.3 in) | 662 mm (26.1 in) | 64 | 9.2 ms | 4.8 ms |

[1] Worst-case response time is twice the scan time.


Original Document
196877 Rev. B

7 March 2017

196877


ПРОМЭЛЕКТРОНИКА/ sales@prom-elec.com

| **Emitter/Receiver** Models | Array Length (Y) | Housing Length (L1) | Distance Between Bracket Holes | | Total Beams | Sensor Scan Time [1] | |
|---|---|---|---|---|---|---|---|
| | | | L2 | L3 | | Interlaced Scan | Straight Scan |
| MAE3032Q **Emitter**<br>MAR3032NX485Q Receiver | 752 mm (29.62 in) | 841 mm (33.1 in) | 871 mm (34.3 in) | 815 mm (32.1 in) | 80 | 11.5 ms | 6.0 ms |
| MAE3632Q **Emitter**<br>MAR3632NX485Q Receiver | 905 mm (35.62 in) | 993 mm (39.1 in) | 1024 mm (40.3 in) | 967 mm (38.1 in) | 96 | 13.7 ms | 7.1 ms |
| MAE4232Q **Emitter**<br>MAR4232NX485Q Receiver | 1057 mm (41.62 in) | 1146 mm (45.1 in) | 1176 mm (46.3 in) | 1119 mm (44.1 in) | 112 | 16.0 ms | 8.2 ms |
| MAE4832Q **Emitter**<br>MAR4832NX485Q Receiver | 1210 mm (47.62 in) | 1298 mm (51.1 in) | 1329 mm (52.3 in) | 1272 mm (50.1 in) | 128 | 18.2 ms | 9.4 ms |
| MAE5432Q **Emitter**<br>MAR5432NX485Q Receiver | 1362 mm (53.62 in) | 1451 mm (57.1 in) | 1481 mm (58.3 in) | 1424 mm (56.1 in) | 144 | 20.4 ms | 10.5 ms |
| MAE6032Q **Emitter**<br>MAR6032NX485Q Receiver | 1514 mm (59.62 in) | 1603 mm (63.1 in) | 1633 mm (64.3 in) | 1577 mm (62.1 in) | 160 | 22.7 ms | 11.6 ms |
| MAE6632Q **Emitter**<br>MAR6632NX485Q Receiver | 1667 mm (65.62 in) | 1755 mm (69.1 in) | 1786 mm (70.3 in) | 1729 mm (68.1 in) | 176 | 24.9 ms | 12.7 ms |
| MAE7232Q **Emitter**<br>MAR7232NX485Q Receiver | 1819 mm (71.62 in) | 1908 mm (75.1 in) | 1938 mm (76.3 in) | 1881 mm (74.1 in) | 192 | 27.1 ms | 13.9 ms |

## **Emitter** and Receiver Wiring

Connect the emitter and receiver cables as shown.

Receiver Output 1: (OUT1) is an open-collector NPN transistor switch rated at 30 V dc max., 150 mA max. It is protected against overload and short circuits.

Receiver Alarm: (ALARM) is an open-collector NPN transistor switch rated at 30 V dc max., 150 mA max. It is protected against overload and short circuits.

Both outputs are current sinking.

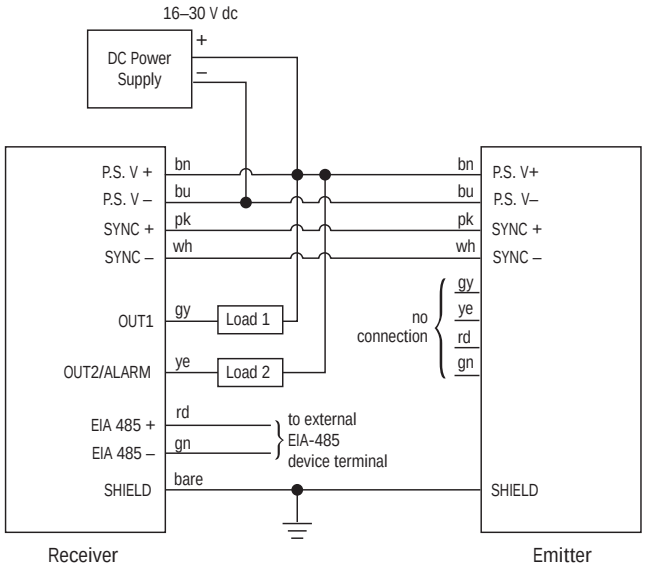


[1] Worst-case response time is twice the scan time.

## Specifications

Supply Voltage and Power
16 V dc to 30 V dc; maximum power 12 watts

Supply **Protection** Circuitry
Protected against reverse polarity and transient voltages

Discrete Output **Configuration**
Two discrete outputs: Output 1 and Output 2
Outputs can be configured as either open collector NPN or PNP transistors. The outputs are factory configured as NPN outputs.

Discrete Output (either NPN or PNP) **Ratings**
Rated at 30 V dc max, 150 mA max load, short circuit protected
OFF-State Leakage Current: < 10 µA at 30 V dc
ON-State Saturation Voltage: < 1 V dc at 10 mA, < 1.5 V dc at 150 mA

Serial Data Outputs
EIA-485 interface
Baud rate 9600, 19.2 K, 38.4 K
8 data bits, 1 start bit, 1 stop bit, no parity

Controller Programming
Via EIA-485 to Banner Sensors GUI software

**Emitter/Receiver** Range
Sensors < 1220 mm (4 ft) long: 6.1 m (20 ft)
Sensors ≥ 1220 mm (4 ft) long: 4.6 m (15 ft)

Minimum Object **Sensitivity**
Interlaced Mode: 12.7 mm (0.5 in) [2], [3]
Other Scan Modes: 19.1 mm (0.75 in)[3]

Sensor Scan Time
Worst-case response time is twice the scan time

Cable **Connections**
Emitter and receiver cables may not exceed 80 m (250 ft) each
150 mm (6.5 inch) PVC cable with M12/Euro-style quick disconnect
Quick disconnect cordsets available separately

Status Indicators
Emitter: Red LED lights for proper operation
Receiver: Green – sensors aligned (> 3x excess gain); Amber – marginal alignment (1x-3x excess gain); Red – sensors misaligned or beam(s) blocked

Environmental **Rating**
NEMA 4, 13
IEC IP65
UL Type 1 enclosure

**Construction**
Aluminum housing with black anodized finish; acrylic lens cover

**Operating Conditions**
Temperature: –40 °C to +70 °C (–40 °F to +158 °F)
95% maximum relative humidity (non-condensing)

**Application** Notes
The emitter and receiver sync lines (pink and white wires) will be damaged if connected to the power supply
The receiver EIA-485 interface (red and green wires) will be damaged if connected to the power supply

**Certifications**

## Banner Engineering Corp. Limited Warranty

Banner Engineering Corp. warrants its products to be free from defects in material and workmanship for one year following the date of shipment. Banner Engineering Corp. will repair or replace, free of charge, any product of its manufacture which, at the time it is returned to the factory, is found to have been defective during the warranty period. This warranty does not cover damage or liability for misuse, abuse, or the improper application or installation of the Banner product.

THIS LIMITED WARRANTY IS EXCLUSIVE AND IN LIEU OF ALL OTHER WARRANTIES WHETHER EXPRESS OR IMPLIED (INCLUDING, WITHOUT LIMITATION, ANY WARRANTY OF MERCHANTABILITY OR FITNESS FOR A PARTICULAR PURPOSE), AND WHETHER ARISING UNDER COURSE OF PERFORMANCE, COURSE OF DEALING OR TRADE USAGE.

This Warranty is exclusive and limited to repair or, at the discretion of Banner Engineering Corp., replacement. IN NO EVENT SHALL BANNER ENGINEERING CORP. BE LIABLE TO BUYER OR ANY OTHER PERSON OR ENTITY FOR ANY EXTRA COSTS, EXPENSES, LOSSES, LOSS OF PROFITS, OR ANY INCIDENTAL, CONSEQUENTIAL OR SPECIAL DAMAGES RESULTING FROM ANY PRODUCT DEFECT OR FROM THE USE OR INABILITY TO USE THE PRODUCT, WHETHER ARISING IN CONTRACT OR WARRANTY, STATUTE, TORT, STRICT LIABILITY, NEGLIGENCE, OR OTHERWISE.

Banner Engineering Corp. reserves the right to change, modify or improve the design of the product without assuming any obligations or liabilities relating to any product previously manufactured by Banner Engineering Corp. Any misuse, abuse, or improper application or installation of this product or use of the product for personal protection applications when the product is identified as not intended for such purposes will void the product warranty. Any modifications to this product without prior express approval by Banner Engineering Corp will void the product warranties. All specifications published in this document are subject to change; Banner reserves the right to modify product specifications or update documentation at any time. Specifications and product information in English supersede that which is provided in any other language. For the most recent version of any documentation, refer to: www.bannerengineering.com.

[2] Assumes sensing is in middle one-third of scanning range.
[3] Requires minimum separation of emitter/receiver of 0.9 m (3 ft).



© Banner Engineering Corp. All rights reserved