Q45PSD All-in-One Pressure Sensor Node

Features



Sure Cross® Wireless Q45 Sensors combine the best of Banner's flexible sensor family with its reliable, field-proven, Sure Cross wireless architecture to solve new classes of applications limited only by the user's imagination. Containing a variety of sensor models, a radio, and an internal battery supply, this product line is truly plug-and-play.

The Q45PSD All-in-One Pressure Sensor Node combines a media-isolated pressure sensor with the reliable, field-proven, Sure Cross wireless architecture into one package, eliminating the need for ordering multiple components and reducing the device's size. This solution monitors pressurized systems in remote locations without human intervention. The industrial-grade, battery-powered device can wirelessly transmit pressure levels to a wireless controller/gateway for remote monitoring of critical systems.

Benefits

- Provides for the ability to deliver factory automation and IIoT solutions for many applications including, but not limited to monitoring:
  - HVAC systems
  - Pneumatic systems
  - Compressor outlet pressure
  - Bulk storage tanks for air/gas
- **Eliminate control wires**—The Sure Cross wireless system is a radio frequency network with integrated I/O that removes the need for power and control wires
- **Reduce complexity**—Machine or process reconfiguration made easier; great for retrofit applications
- **Deploy easily**—Simplify installation on existing equipment to enable deployment in remote and hard-to-access locations where implementing a wired solution would be difficult, impractical, or not cost-effective
- Selectable transmit power levels of 250 mW or 500 mW for 900 MHz models
- Frequency Hopping Spread Spectrum (FHSS) technology ensures reliable data delivery
- Transceivers provide bidirectional communication between the Gateway and Node, including fully acknowledged data transmission

Models

Model	Radio Frequency	Inputs and Outputs
DX80N9Q45PSD150G	900 MHz ISM Band	Q45 with integrated 0-150 psi gauge pressure sensor
DX80N2Q45PSD150G	2.4 GHz ISM Band	

To order an integrated battery model without the battery, add an **NB** to the model number (for example, **DX80N9Q45PSD150G NB**). If you purchase a model without the battery, Banner Engineering recommends battery model **BWA-BATT-011**.

Storage Mode

While in **storage mode**, the device's radio does not operate to conserve the battery. To put any device into storage mode, press and hold the binding button for five seconds. The device is in storage mode when the LEDs stop blinking. To wake the device, press and hold the binding button (inside the housing on the radio board) for five seconds.

Configuration Instructions

Button and LEDs

1. Binding button
2. Red LED (flashing) indicates a radio link error with the Gateway.
3. Green LED (flashing) indicates a good radio link with the Gateway.
4. Amber LED is not used.
5. DIP switches

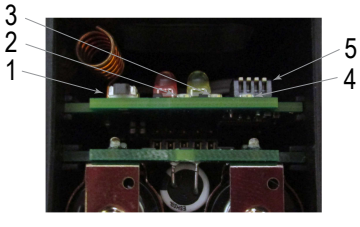

Q45PSD DIP Switches

After making changes to any DIP switch position, reboot the Wireless Q45 Sensor by triple-clicking the button, waiting a second, then double-clicking the button.

The DIP switches are in the OFF position. To turn a DIP switch on, push the switch toward the battery pack. DIP switches one through four are numbered from left to right.

Original Instructions
24-Feb-25

© Banner Engineering Corp. All rights reserved.
www.bannerengineering.com

243267
p/n: 243267 Rev. B

ПРОМЭЛЕКТРОНИКА/ sales@prom-elec.com

	DIP Switches			
	1	2	3	4
900 MHz transmit power level: 500 mW (27 dBm) (default)	OFF			
900 MHz transmit power level: 250 mW (24 dBm)	ON			
Reserved (default)		OFF		
Reserved (default)			OFF	
Reserved (default)				OFF

The factory default sample and report rate is 5 minutes. Sample and report rates can be modified using the sensor configuration tools provided on the Banner Engineering website.

Transmit Power Levels

The 900 MHz radios have a high output option that will transmit at 500 mW (27 dBm). The low output option transmits at 250 mW (24 dBm). The 250 mW mode reduces the radio's range but improves the battery life in short-range applications. For 2.4 GHz models, this DIP switch is disabled. The transmit power for 2.4 GHz is fixed at about 65 mW EIRP (18 dBm).

Sample and Report Rates

The sample interval, or rate, defines how often the Sure Cross device samples the input. For battery-powered applications, setting a slower rate extends the battery life.

The report rate defines how often the Node communicates the I/O status to the Gateway. For battery-powered applications, setting the report rate to a slower rate extends the battery life.

What is Sampling on Demand?

Sample on demand allows a host system to send a Modbus command to a register and require the inputs to immediately sample the sensor and report readings back to the host system and/or Gateway. Sampling on demand can be used between the normal periodic reporting.

The sample-on-demand feature requires using a host-controlled system capable of sending Modbus commands to the client radio.

Sample an Input Using a Host System

To sample the input, have the Host System write to the Node's register 15. To calculate which register this is for your Node, use this equation: 15 + (Node # × 16).

1. From the host system, write 0x13xx to the Node's register 15, where xx defines the input you want to sample.

For Input	Write Value (in hex)	Write Value (in decimal)
1	0x1301	4865
2	0x1302	4866
3	0x1304	4868
4	0x1308	4872
5	0x1310	4880
6	0x1320	4896
All Inputs	0x133F	4927

2. To send the Sample on Demand command to more than one input, add together the binary representation values.
   For example, to demand a sampling of inputs 1, 2, and 3, the Hex command is 0x1307.

Apply Power to the Q45 D-Cell Models

Follow these instructions to install or replace the lithium D-cell batteries.

CAUTION:

- **As with all batteries, these are fire, explosion, and severe burn hazards. There is a risk of explosion if the battery is replaced incorrectly.**
- Do not burn or expose them to high temperatures. Do not recharge, crush, disassemble, or expose the contents to water.
- Verify the battery's positive and negative terminals align to the positive and negative terminals of the battery holder mounted within the case.
- Properly dispose of used batteries according to local regulations by taking them to a hazardous waste collection site, an e-waste disposal center, or another facility qualified to accept lithium batteries.

© Banner Engineering Corp. All rights reserved.
www.bannerengineering.com





1. Loosen the clamp plate with a small Phillips screwdriver and lift the cover.
2. Use the black pull wire to pull the battery board out of the Q45 housing.
3. If applicable, remove the discharged battery.
4. Install the new battery. Use Banner's **BWA-BATT-011** replacement battery or an equivalent 3.6 V D-cell lithium battery, such as Xeno's XL-205F.
5. Verify the battery's positive and negative terminals align to the positive and negative terminals of the battery holder mounted within the case.
6. Slide the board containing the new battery back into the Q45 housing.
7. Close the cover and gently tighten the clamp plate with the small Phillips screwdriver.

Bind to the Gateway and Assign the Node Address

Before beginning the binding procedure, apply power to all the devices. Separate the devices by two meters when running the binding procedure. Put only one Gateway into binding at a time to prevent binding to the wrong Gateway.

1. On the Gateway: Enter binding mode.
    - For housed DX80 Gateways, triple-click button 2 on the Gateway. Both LEDs flash red.
    - For Gateway board modules, triple-click the button. The green and red LED flashes.
2. Assign the Q45PSD a Node address using the Gateway's rotary dials. Use the left rotary dial for the left digit and the right rotary dial for the right digit. For example, to assign your Q45PSD to Node 10, set the Gateway's left dial to 1 and the right dial to 0. Valid Node addresses are 01 through 47.
3. On the Q45: Loosen the clamp plate on the top of the Q45PSD and lift the cover.
4. Enter binding mode on the Q45PSD by triple-clicking the Q45PSD's button.
   The red and green LEDs flash alternately and the sensor searches for a Gateway in binding mode. After the Q45PSD is bound, the LEDs stay solid momentarily, then they flash together four times. The Q45PSD exits binding mode.
5. Label the sensor with the Q45PSD's Node address number for future reference.
6. Repeat steps 2 through 5 for as many Q45PSDs as are needed for your network.
7. On the Gateway: After binding all Q45PSDs, exit binding mode.
    - For housed DX80 Gateways, double-click button 2.
    - For board-level DX80 Gateways, double-click the button.

For Gateways with single-line LCDs: After binding your Q45PSD to the Gateway, make note of the binding code displayed under the Gateway's *DVCFG menu, XADR submenu on the LCD. Knowing the binding code prevents having to re-bind all Q45PSDs if your Gateway is ever replaced.

Bind to a DXM and Assign the Node Address

Before beginning the binding procedure, apply power to all the devices. Separate the radios by two meters when running the binding procedure. Put only one DXM into binding mode at a time to prevent the Q45PSD from binding to the wrong Gateway.

1. On the DXM: Use the arrow keys to select the **ISM Radio** menu on the LCD and click **ENTER**.
2. Highlight the **Binding** menu and click **ENTER**.
3. Use the arrow keys to select the Node address to bind the Q45PSD to.
4. On the Q45PSD: Loosen the top clamp plate and lift the cover.
5. Enter binding mode by triple-clicking the binding button.
   The red and green LEDs flash alternately and the sensor searches for a Gateway in binding mode. After the Node binds, the LEDs stay solid momentarily, then they flash together four times. The Node exits binding mode.
6. Label the sensor with the Node address number for future reference.
7. On the DXM: Click **BACK** to exit binding for that specific Node address.
8. Repeat steps 3 through 7 and change the Node address for as many Q45PSDs as are needed for your network.
9. On the DXM: After you have finished forming your network, click **BACK** until you reach the main menu.

© Banner Engineering Corp. All rights reserved.
www.bannerengineering.com

Modbus Registers

Modbus holding registers

I/O #	Modbus Holding Register		I/O Type	I/O Range		Holding Register Representation	
	Gateway	Any Node		Min.	Max.	Min.	Max.
1	1	1 + (Node# × 16)	Pressure (PSI)	0	6553.5	0	65535
2	2	2 + (Node# × 16)	Pressure (kPa)	0	65535	0	65535
		...					
7	7	7 + (Node# × 16)	Reserved				
8	8	8 + (Node# × 16)	Device Message				
		...					
15	15	15 + (Node# × 16)	Control Message				
16	16	16 + (Node# × 16)	Reserved				

Pressure (PSI) value = (Modbus register value) ÷ 10.

Specifications

Radio Specifications for Performance Internal Antenna

Radio Transmit Power (900 MHz, 500 mW radios)

Conducted: 27 dBm (500 mW)

EIRP with the supplied antenna: < 36 dBm

Radio Transmit Power (2.4 GHz radios)

Conducted: < 18 dBm (65 mW)

EIRP with the supplied antenna: < 20 dBm (100 mW)

Antenna Minimum Separation Distance

900 MHz radios transmitting at ≥ 500 mW: 4.57 m (15 ft) with the supplied antenna

2.4 GHz radios transmitting at 65 mW: 0.3 m (1 ft) with the supplied antenna

Radio Range

A 2 dB antenna ships with this device.

Transmit power and range are subject to many factors, including antenna gain, installation methods, characteristics of the application, and environmental conditions.

Please refer to the following documents for installation instructions and high-gain antenna options.

Installing Your Sure Cross® Radios (151514)
Conducting a Site Survey (133602)
Sure Cross® Antenna Basics (132113)

Link Timeout (Performance)

Gateway: Configurable via User Configuration Software

Node: Defined by Gateway

Spread Spectrum Technology

FHSS (Frequency Hopping Spread Spectrum)

900 MHz Compliance (SX7023EXT Radio Module)

Radio module is indicated by the product label marking

Contains FCC ID: UE3SX7023EXT

Contains IC: 7044A-SX7023EXT

2.4 GHz Compliance (SX243 Radio Module)

Radio module is indicated by the product label marking

Contains FCC ID: UE3SX243

Radio Equipment Directive (RED) 2014/53/EU

Contains IC: 7044A-SX243

FCC Part 15 Class A for Intentional Radiators

This equipment has been tested and found to comply with the limits for a Class A digital device, pursuant to Part 15 of the FCC Rules. These limits are designed to provide reasonable protection against harmful interference when the equipment is operated in a commercial environment. This equipment generates, uses, and can radiate radio frequency energy and, if not installed and used in accordance with the instruction manual, may cause harmful interference to radio communications. Operation of this equipment in a residential area is likely to cause harmful interference in which case the user will be required to correct the interference at his own expense.

(Part 15.21) Any changes or modifications not expressly approved by the party responsible for compliance could void the user's authority to operate this equipment.

Industry Canada Statement for Intentional Radiators

This device contains licence-exempt transmitters(s)/receiver(s) that comply with Innovation, Science and Economic Development Canada's licence-exempt RSS(s). Operation is subject to the following two conditions:

1. This device may not cause interference.
2. This device must accept any interference, including interference that may cause undesired operation of the device.

Cet appareil contient des émetteurs/récepteurs exemptés de licence conformes à la norme Innovation, Sciences, et Développement économique Canada. L'exploitation est autorisée aux deux conditions suivantes:

1. L'appareil ne doit pas produire de brouillage.
2. L'utilisateur de l'appareil doit accepter tout brouillage radioélectrique subi, même si le brouillage est susceptible d'en compromettre le fonctionnement.

© Banner Engineering Corp. All rights reserved.
www.bannerengineering.com

Q45PSD Sensor Node Specifications

Pressure Sensor

Range: 0–150 PSIG
Proof Pressure: 1.5× Full Scale
Burst Pressure: 2× Full Scale
Output: 0-3 V DC
Accuracy: ± 1.4% FS

Pressure Sensor Mechanical

Pressure fitting: 1/4"-18NPT
Rating: IP65
Housing: #304SS, Copper, Aluminum
Wetted material: #316L Stainless Steel, Ceramic

Housing

Molded reinforced thermoplastic polyester housing, oring-sealed transparent Lexan® cover, molded acrylic lenses, and stainless steel hardware. Designed to withstand 1200 psi washdown.

Indicators

Red and green LEDs (radio function)

Default Sensing Interval

5 minutes

Typical Battery Life

See chart

Certificatons

CE/UKCA approval only applies to 2.4 GHz models

Banner Engineering BV
Park Lane, Culliganlaan 2F bus 3
1831 Diegem, BELGIUM

Turck Banner LTD Blenheim House
Blenheim Court
Wickford, Essex SS11 8YT
GREAT BRITAIN

Environmental Specifications for the Q45

Operating Conditions

–40 °C to +70 °C (–40 °F to +158 °F); 90% at +50 °C maximum relative humidity (non-condensing)
Radiated Immunity: 10 V/m (EN 61000-4-3)

Environmental Rating

NEMA 6P
IP67

Operating the devices at the maximum operating conditions for extended periods can shorten the life of the device.

Battery Life

Battery life for the Q45PSDNode

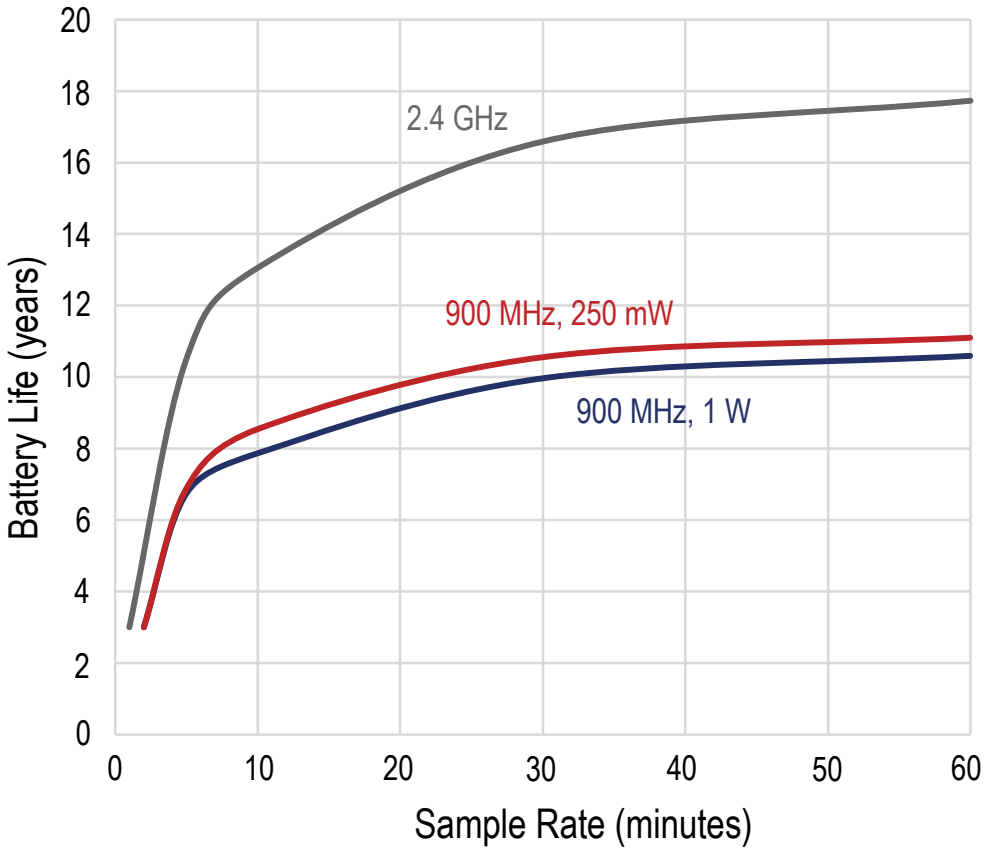

© Banner Engineering Corp. All rights reserved.
www.bannerengineering.com

Dimensions

All measurements are listed in millimeters, unless noted otherwise. The measurements provided are subject to change.

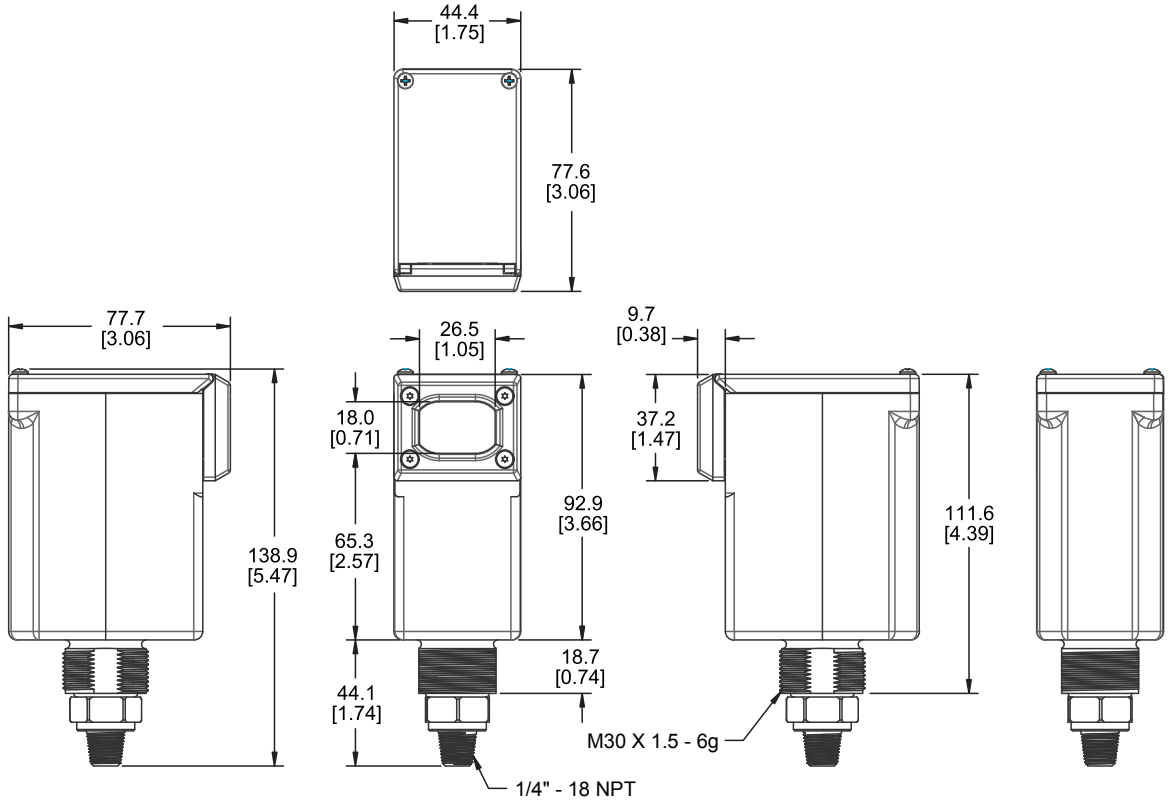

Replacement Batteries

BWA-BATT-011

- 3.6 V Lithium D cell for non-hazardous locations only
- 19000 mAH
- One battery



Warnings (Internal Antenna Models)

Exporting Sure Cross® Radios. It is our intent to fully comply with all national and regional regulations regarding radio frequency emissions. **Customers who want to re-export this product to a country other than that to which it was sold must ensure the device is approved in the destination country.** Consult with Banner Engineering Corp. if the destination country is not on this list.

IMPORTANT: Please download the complete Q45PSD All-in-One Pressure Sensor Node technical documentation, available in multiple languages, from www.bannerengineering.com for details on the proper use, applications, Warnings, and installation instructions of this device.

IMPORTANT: Por favor descargue desde www.bannerengineering.com toda la documentación técnica de los Q45PSD All-in-One Pressure Sensor Node, disponibles en múltiples idiomas, para detalles del uso adecuado, aplicaciones, advertencias, y las instrucciones de instalación de estos dispositivos.

IMPORTANT: Veuillez télécharger la documentation technique complète des Q45PSD All-in-One Pressure Sensor Node sur notre site www.bannerengineering.com pour les détails sur leur utilisation correcte, les applications, les notes de sécurité et les instructions de montage.

WARNING:

- **Do not use this device for personnel protection**
- Using this device for personnel protection could result in serious injury or death.
- This device does not include the self-checking redundant circuitry necessary to allow its use in personnel safety applications. A device failure or malfunction can cause either an energized (on) or de-energized (off) output condition.

© Banner Engineering Corp. All rights reserved.
www.bannerengineering.com

IMPORTANT:

- **Electrostatic discharge (ESD) sensitive device**
- ESD can damage the device. Damage from inappropriate handling is not covered by warranty.
- Use proper handling procedures to prevent ESD damage. Proper handling procedures include leaving devices in their anti-static packaging until ready for use; wearing anti-static wrist straps; and assembling units on a grounded, static-dissipative surface.

Banner Engineering Corp Limited Warranty

Banner Engineering Corp. warrants its products to be free from defects in material and workmanship for one year following the date of shipment. Banner Engineering Corp. will repair or replace, free of charge, any product of its manufacture which, at the time it is returned to the factory, is found to have been defective during the warranty period. This warranty does not cover damage or liability for misuse, abuse, or the improper application or installation of the Banner product.

THIS LIMITED WARRANTY IS EXCLUSIVE AND IN LIEU OF ALL OTHER WARRANTIES WHETHER EXPRESS OR IMPLIED (INCLUDING, WITHOUT LIMITATION, ANY WARRANTY OF MERCHANTABILITY OR FITNESS FOR A PARTICULAR PURPOSE), AND WHETHER ARISING UNDER COURSE OF PERFORMANCE, COURSE OF DEALING OR TRADE USAGE.

This Warranty is exclusive and limited to repair or, at the discretion of Banner Engineering Corp., replacement. **IN NO EVENT SHALL BANNER ENGINEERING CORP. BE LIABLE TO BUYER OR ANY OTHER PERSON OR ENTITY FOR ANY EXTRA COSTS, EXPENSES, LOSSES, LOSS OF PROFITS, OR ANY INCIDENTAL, CONSEQUENTIAL OR SPECIAL DAMAGES RESULTING FROM ANY PRODUCT DEFECT OR FROM THE USE OR INABILITY TO USE THE PRODUCT, WHETHER ARISING IN CONTRACT OR WARRANTY, STATUTE, TORT, STRICT LIABILITY, NEGLIGENCE, OR OTHERWISE.**

Banner Engineering Corp. reserves the right to change, modify or improve the design of the product without assuming any obligations or liabilities relating to any product previously manufactured by Banner Engineering Corp. Any misuse, abuse, or improper application or installation of this product or use of the product for personal protection applications when the product is identified as not intended for such purposes will void the product warranty. Any modifications to this product without prior express approval by Banner Engineering Corp will void the product warranties. All specifications published in this document are subject to change; Banner reserves the right to modify product specifications or update documentation at any time. Specifications and product information in English supersede that which is provided in any other language. For the most recent version of any documentation, refer to: www.bannerengineering.com.

For patent information, see www.bannerengineering.com/patents.

Notas Adicionales

Información México: La operación de este equipo está sujeta a las siguientes dos condiciones: 1) es posible que este equipo o dispositivo no cause interferencia perjudicial y 2) este equipo debe aceptar cualquier interferencia, incluyendo la que pueda causar su operación no deseada.

Banner es una marca registrada de Banner Engineering Corp.

Mexican Importer

Banner Engineering de Mèxico, S. de R.L. de C.V. | David Alfaro Siqueiros 103 Piso 2 Valle oriente | San Pedro Garza Garcia Nuevo Leòn, C. P. 66269

81 8363.2714

© Banner Engineering Corp. All rights reserved.
www.bannerengineering.com