R70ER and DX700ER Ethernet Data Radios

Original Instructions
p/n: 226574 Rev. E
13-Feb-26
© Banner Engineering Corp. All rights reserved. www.bannerengineering.com

ПРОМЭЛЕКТРОНИКА/ sales@prom-elec.com

Contents

Chapter 1 Features 3
Models 3
Specifications 3
FCC Part 15 Class A for Intentional Radiators 4
Industry Canada Statement for Intentional Radiators 4
R70ER Dimensions 5
DX700ER Dimensions 6
MultiHop Ethernet Data Radio Overview 6
Set Up Your R70ER or DX700ER Radio Network 6

Chapter 2 Configure the R70ER Models 8
R70ER Buttons and LEDs 8
Configure the R70ER DIP Switches 8
Network Topologies 9
Apply Power to the R70ER 11
Bind the R70ER Ethernet Radio to Form a Network 11
Client Radio LED Behavior 12
Server Radio LED Behavior 12

Chapter 3 Configure the DX700ER Models 13
Apply Power to the DX700ER 13
Configure the DX700ER Data Radio Using the LCD Menu 13
Configure the Client Radio 15
Configure the Server Radio 15
Configure the Repeater Radio 15
Bind the DX700ER Ethernet Radios to Form a Network 16
Perform a Site Survey 16
Using the MultiHop Configuration Software 17

Chapter 4 Setting Up Your Ethernet Data Radio Network 18
Conduct a Ping Test Using Ethernet Cables 18
Replace the Ethernet Cables with a Data Radio 19
Troubleshooting the Ethernet Network 19
Installing Your Sure Cross® Radios 20

Chapter 5 Accessories 21

Chapter 6 Product Support and Maintenance 24
Warnings 24
Banner Engineering Corp Limited Warranty 24

© Banner Engineering Corp. All rights reserved. www.bannerengineering.com

Chapter Contents

Models 3
Specifications 3
MultiHop Ethernet Data Radio Overview 6
Set Up Your R70ER or DX700ER Radio Network 6

Chapter 1 Features

The Sure Cross R70ER and DX700ER Ethernet Data Radios are compact, industrial, communication devices that create point-to-multipoint configurations of wireless Ethernet networks. These devices are available in two frequencies, 900 MHz and 2.4 GHz.

The R70ER is fitted with a D-Code M12 quick disconnect for fast deployment and the DXM700ER has a standard RJ45 Ethernet jack for connectivity with most industrial platforms.

DX700ER Ethernet Data Radio



- Star or tree network topology configuration
- DIP switches or LCD menu for operational mode selection
- No IP address configuration is required
- Frequency Hopping Spread Spectrum (FHSS) technology ensures reliable data delivery
- Self-healing, auto-routing radio frequency network with multiple hops to extend the network's range
- Advanced Encryption Standard (AES) using a 256-bit cryptographic key

R70ER



For additional information, updated documentation, and a list of accessories, refer to Banner Engineering's website, www.bannerengineering.com.

Models

Models	Frequency	Configuration Method	Antenna	Ethernet Connection
R70ER9MQ	900 MHz ISM Band	DIP Switches	Internal	D-code M12 male quick disconnect
R70ER2MQ	2.4 GHz ISM Band			
DX700ER9M-H	900 MHz ISM Band	LCD Menu	External	RJ45 standard jack
DX700ER2M-H	2.4 GHz ISM Band			

Specifications

Radio Range

A 2 dB antenna ships with this device.

Transmit power and range are subject to many factors, including antenna gain, installation methods, characteristics of the application, and environmental conditions.

Please refer to the following documents for installation instructions and high-gain antenna options.

Installing Your Sure Cross® Radios (151514)
Conducting a Site Survey (133602)
Sure Cross® Antenna Basics (132113)

Radio Transmit Power

900 MHz Conducted: 27 dBm (500 mW); EIRP with the supplied antenna: < 36 dBm

2.4 GHz Conducted: < 18 dBm (65 mW); EIRP with the supplied antenna: < 20 dBm (100 mW)

Antenna Minimum Separation Distance

900 MHz radios transmitting at ≥ 500 mW: 4.57 m (15 ft) with the supplied antenna

2.4 GHz, 65 mW: 0.3 m (1 ft)

© Banner Engineering Corp. All rights reserved.
www.bannerengineering.com

Antenna Connection for the DX700ER

Ext. Reverse Polarity SMA, 50 Ohms

Max Tightening Torque: 0.45 Nm (4 lbf in)

Spread Spectrum Technology

FHSS (Frequency Hopping Spread Spectrum)

Communication Protocols

Modbus® RTU, Modbus/TCP, EtherNet/IP™

EtherNet/IP™ is a trademark of ODVA, Inc.Modbus® is a registered trademark of Schneider Electric USA, Inc.

Security Protocols

TLS, SSL, HTTPS

900 MHz Compliance (RM7023 Radio Module)

Radio module is indicated by the product label marking

Contains FCC ID: UE3RM7023

Contains IC: 7044A-RM7023

2.4 GHz Compliance (SX243 Radio Module)

Radio module is indicated by the product label marking

Contains FCC ID: UE3SX243

Radio Equipment Directive (RED) 2014/53/EU

Contains IC: 7044A-SX243

Radio Data Transfer Rate

900 MHz: 300 kbps

2.4 GHz: 250 kbps

Power Connector

R70ER: M12 male connector

DX700ER: Wiring terminals

Supply Voltage

R70ER: 10 V DC to 30 V DC

DX700ER: 12 to 30 V DC

Use only with a suitable Class 2 power supply (UL). For European applications, power this device from a Limited Power Source as defined in EN 60950-1.

Average Current for 900 MHz Radios (1500 byte packets at 50 ms intervals)

Client Mode: 0.12 A at 12 V; 0.06 A at 24 V

Server Mode: 0.03 A at 12 V; 0.017 A at 24 V

Average Current for 2.4 GHz Radios (1500 byte packets at 50 ms intervals

Client Mode: 0.035 A at 12 V; 0.02 A at 24 V

Server Mode: 0.022 A at 12 V; 0.014 A at 24 V

Interface

R70ER: Two bi-color LED indicators, one button (under the small round cover)

DX700ER: LCD with buttons

Construction

R70ER: Black polycarbonate base and a translucent gray polycarbonate cover

DX700ER: Polycarbonate with a DIN rail mount option

Operating Conditions

R70ER: –40 °C to +85 °C (–40 °F to +185 °F)

DX700ER: –20 °C to +60 °C (–4 °F to +140 °F)

95% maximum relative humidity (non-condensing)

Radiated Immunity: 10 V/m (EN 61000-4-3)

Operating the devices at the maximum operating conditions for extended periods can shorten the life of the device.

Environmental Ratings

R70ER: IP65

DX700ER: IP10

For installation and waterproofing instructions, go to www.bannerengineering.com and search for the complete instruction manual

Shock and Vibration

All models meet IEC 60068-2-6 and IEC 60068-2-27 testing criteria

Shock: 30G 11 ms duration, half sine wave per IEC 60068-2-27

Vibration: 10 Hz to 55 Hz, 0.5 mm peak-to-peak amplitude per IEC 60068-2-6

Certifications

ANATEL Agência Nacional de Telecomunicações 03737-22-04042

FCC Part 15 Class A for Intentional Radiators

This equipment has been tested and found to comply with the limits for a Class A digital device, pursuant to Part 15 of the FCC Rules. These limits are designed to provide reasonable protection against harmful interference when the equipment is operated in a commercial environment. This equipment generates, uses, and can radiate radio frequency energy and, if not installed and used in accordance with the instruction manual, may cause harmful interference to radio communications. Operation of this equipment in a residential area is likely to cause harmful interference in which case the user will be required to correct the interference at his own expense.

(Part 15.21) Any changes or modifications not expressly approved by the party responsible for compliance could void the user's authority to operate this equipment.

Industry Canada Statement for Intentional Radiators

This device contains licence-exempt transmitters(s)/receiver(s) that comply with Innovation, Science and Economic Development Canada's licence-exempt RSS(s). Operation is subject to the following two conditions:

1. This device may not cause interference.
2. This device must accept any interference, including interference that may cause undesired operation of the device.

Cet appareil contient des émetteurs/récepteurs exemptés de licence conformes à la norme Innovation, Sciences, et Développement économique Canada. L'exploitation est autorisée aux deux conditions suivantes:

1. L'appareil ne doit pas produire de brouillage.
2. L'utilisateur de l'appareil doit accepter tout brouillage radioélectrique subi, même si le brouillage est susceptible d'en compromettre le fonctionnement.

© Banner Engineering Corp. All rights reserved.

R70ER Dimensions

All measurements are listed in millimeters [inches], unless noted otherwise. The measurements provided are subject to change.

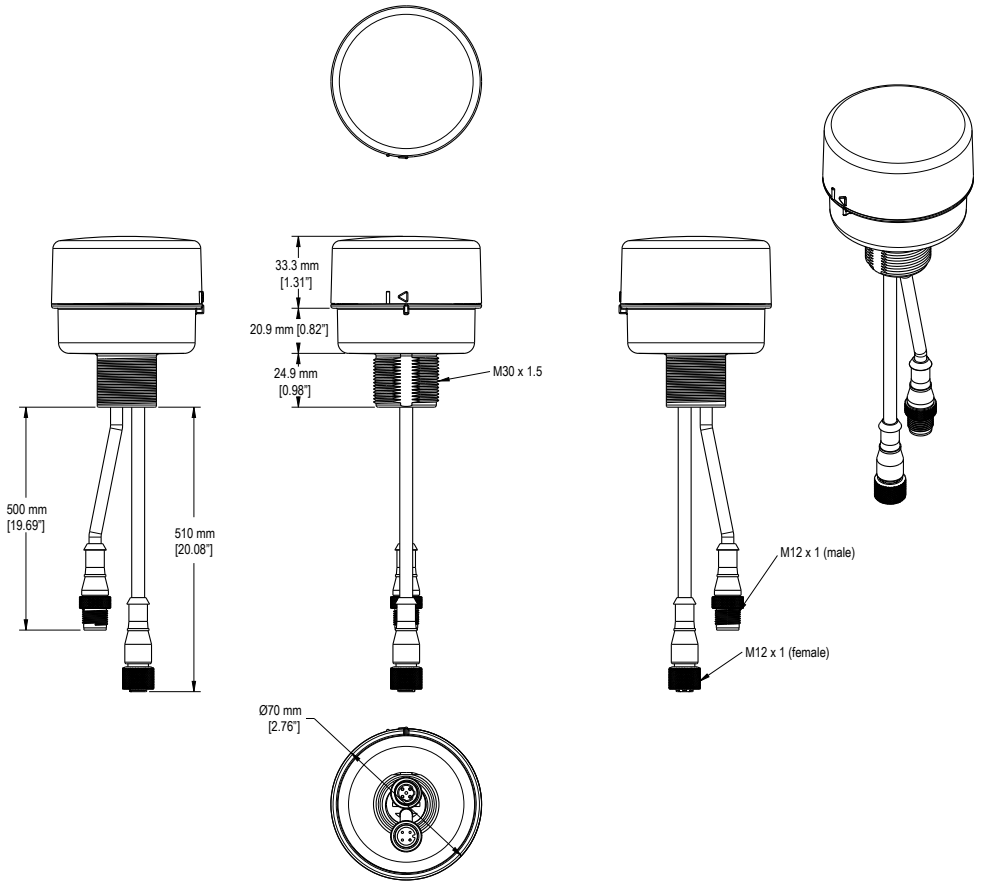

© Banner Engineering Corp. All rights reserved.
www.bannerengineering.com

DX700ER Dimensions

All measurements are listed in millimeters [inches], unless noted otherwise. The measurements provided are subject to change.

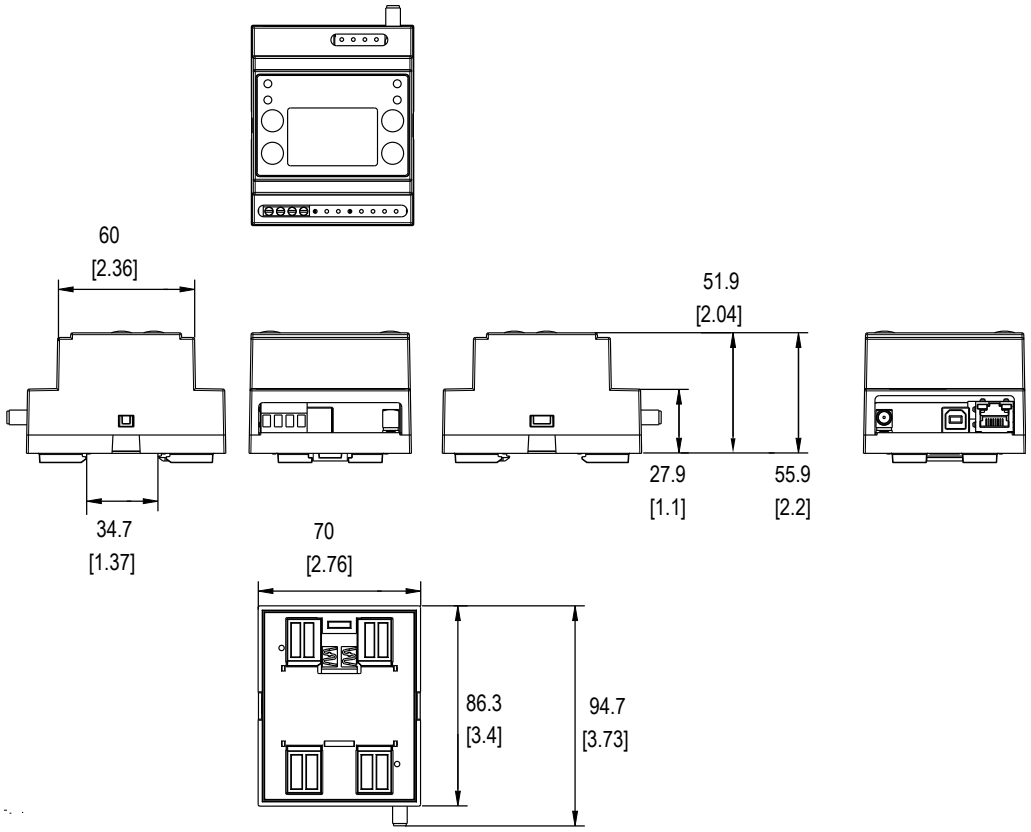

MultiHop Ethernet Data Radio Overview

The MultiHop Ethernet Data Radio system provides extremely reliable communication in large plants, over long distances, or through difficult terrain. A network can easily cover large areas with a raw bit rate of 300 Kbps.

All radios can be configured as a Client, Repeater, or Server radio.

Client Radio: Every network has only one controller/primary radio known as a Client radio with which all data is routed to or from this device. Because of this, the network will have better throughput if the client radio is connected to the PLC or HMI that generates the most data traffic.

Repeater Radio: Repeater radios are servers that also repeat. Although it is possible to use many repeaters in a network, it is usually better to carefully define only a few devices as repeaters to help the network form faster and result in fewer repeated messages. Repeating a message many times can unnecessarily slow down the network. Repeater radios should be stationary and always on; a moving or powered-off repeater causes a slight delay in communications while the network reforms through other repeaters.

Server Radios: Peripheral radios known as server radios cannot repeat and are used at the endpoints of the network. Mobile radios and radios that may not always be on while the network is in use should be configured as server radios to prevent other devices from attempting to connect through them to the client.

Set Up Your R70ER or DX700ER Radio Network

Each radio network should include one client radio and several repeater or server radios. To set up and install your wireless data radio network, follow these steps. See "Setting Up Your Ethernet Data Radio Network" on page 18 for more detailed steps.

1. Before installing your Ethernet data radios, first verify that your Ethernet devices work (see "Conduct a Ping Test Using Ethernet Cables" on page 18).

© Banner Engineering Corp. All rights reserved.
www.bannerengineering.com

a. Connect your devices using an Ethernet cable.
b. Configure the IP addresses of your devices and use a ping test with Ethernet cables to verify the connectivity before installing the radios.

This verifies that the devices are configured correctly before replacing the cabled connection with a wireless connection.

2. For the R70ER models, configure the DIP switches (see "Configure the R70ER DIP Switches" on page 8).
3. Apply power to all devices (see "Apply Power to the R70ER" on page 11 or "Apply Power to the DX700ER" on page 13).
4. For the DX700ER models, configure the role of each radio in the network using the LCD menu system (see "Configure the DX700ER Data Radio Using the LCD Menu" on page 13).
5. Form the wireless network by binding the repeater and server radios to the client radio (see"Bind the DX700ER Ethernet Radios to Form a Network" on page 16).
6. Observe the LED behavior to verify that the devices are communicating with each other.
7. For the DX700ER models, perform a Site Survey (see "Perform a Site Survey" on page 16).
8. Verify the Ethernet devices work wirelessly (see "Replace the Ethernet Cables with a Data Radio" on page 19).
   a. Remove power to the data radio devices.
   b. Connect your Ethernet devices to the Ethernet data radios and apply power.
   c. Run a ping test to confirm data is moving correctly through the wireless network.

© Banner Engineering Corp. All rights reserved.
www.bannerengineering.com

Chapter Contents

R70ER Buttons and LEDs 8
Configure the R70ER DIP Switches 8
Apply Power to the R70ER 11
Bind the R70ER Ethernet Radio to Form a Network 11
Client Radio LED Behavior 12
Server Radio LED Behavior 12

Chapter 2 Configure the R70ER Models

R70ER Buttons and LEDs

Binding button, LEDs, and DIP switches

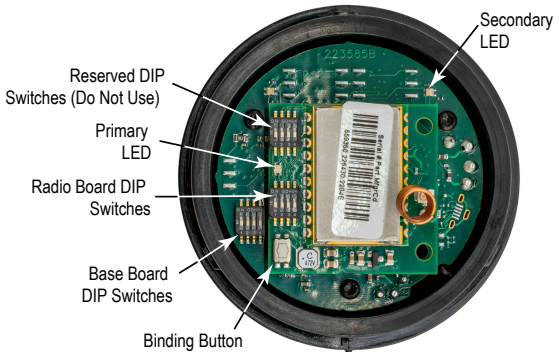

Configure the R70ER DIP Switches

In any radio network, there is one client radio and there can be many server radios. Before changing the DIP switch positions, disconnect the power. Any changes made to the DIP switches are not recognized until after power is cycled to the device.

For parameters not set using the DIP switches, use the configuration software to make configuration changes. For parameters set using the DIP switches, the DIP switch positions override any changes made using the configuration software.

To configure the DIP switches:

1. If the Ethernet Data Radio is in the locked position, the arrow on the cover is above the notch on the base. Rotate the cover counterclockwise so that the notches are aligned together.
2. Pull the top cover off.
3. Set the DIP switches.

Base board DIP switch settings

Device Settings	DIP Switches			
	1	2	3	4
Set this radio to be one of many server radios	OFF	OFF		
Set this radio to be a repeater radio	OFF	ON		
Set this radio to be the client radio	ON	OFF		
Set this radio to be the client radio and suppress rebroadcast mode	ON	ON		
Standard XML Behavior - XML is obeyed			OFF	OFF

Continued on page 9

© Banner Engineering Corp. All rights reserved.
www.bannerengineering.com

Continued from page 8

Device Settings	DIP Switches			
	1	2	3	4
XML Bypassed - DHCP enabled			OFF	ON
Reserved			ON	OFF
XML Bypassed - Static IP 192.168.18.18 (server radio)	OFF		ON	ON
XML Bypassed - Static IP 192.168.17.17 (client radio)	ON		ON	ON

Radio board DIP switch settings (closest to binding button)

Radio Transmit Power (900 MHz Only)	DIP Switch
	4
500 mW (27 dBm) Default	OFF
250 mW (24 dBm)	ON

Suppress Controller Re-broadcast—The factory default setting is OFF (not selected). When not selected, the client device automatically re-broadcasts radio messages coming in from radio devices back out to the radio network when the destination address is not known. This affects server and repeater messages coming to the client that are unknown point-to-point messages and all broadcast-type messages. This allows for server devices to send messages to other server devices within the wireless network. If all messages originate from Ethernet devices connected to the client radio or when a wireless network only has a client and server device (one-to-one networks), this feature can be selected, suppressing re-broadcast messaging. In most cases, this switch will have minimal effect on radio network performance.

Transmit Power Levels—The 900 MHz radios transmit at 500 mW (27 dBm) or 250 mW (24 dBm). The 250 mW mode reduces the radio's range but improves the battery life in short-range applications. For 2.4 GHz models, this DIP switch is disabled. The transmit power for 2.4 GHz is fixed at about 65 mW EIRP (18 dBm).

Star Topology—To configure your radios as a star topology, set one radio to be the client (DIP switch 1 ON). Set all the other radios to be server radios.

XML Behavior—The R70 Ethernet radio is programmed similarly to a DXM Controller and uses a standard XML configuration file to define its settings. For troubleshooting purposes, or advanced use cases, the XML can be bypassed when the device is turned on. With the XML bypassed, the R70 will receive its own IP address, either fixed or through DHCP, according to the DIP switch settings.

Network Topologies

In any radio network, there is one controller (Modbus client) radio and many repeater or peripheral (Modbus server) radios.

Simple point-to-point network for cable replacement applications



In this simple cable replacement application, the radio system knows all data originating at one end must be transmitted to the other end. This allows the radio system to automatically correct for transmission problems and it also provides the greatest throughput. This is the fastest configuration.

- Client configuration route to server: DIP switches 1 ON, 2 ON
- Server configuration route to client: DIP switches 1 OFF, 2 OFF

Point-to-point network with repeater for cable replacement applications

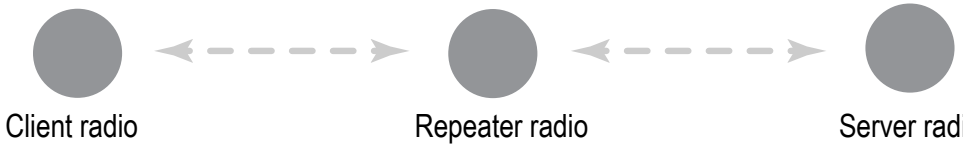

© Banner Engineering Corp. All rights reserved.
www.bannerengineering.com

In this simple cable replacement application with a repeater, the radio system still knows all data originating at one end must be transmitted to the other end. In this application, there are no Ethernet devices connected to the repeater(s). The system still corrects for transmission problems, but it takes time to repeat the message. The network delay is double that of a system with no repeater.

- Client configuration route to server: DIP switches 1 ON, 2 ON
- Repeater configuration: DIP switches 1 OFF, 2 ON
- Server configuration route to client: DIP switches 1 OFF, 2 OFF

Star network in broadcast mode configuration

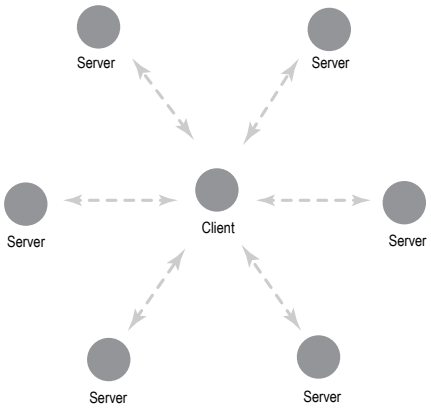

In this more complex star topology in broadcast mode, the client radio at the center of the network can communicate to many server radios. A common example would be a PLC at the center communicating with many remote I/O systems. The star topology is slower than a point-to-point network but faster than a tree network.

- Client configuration to broadcast to all devices: DIP switches 1 ON, 2 OFF
- Server configuration to route to client: DIP switches 1 OFF, 2 OFF

Tree network in broadcast mode configuration

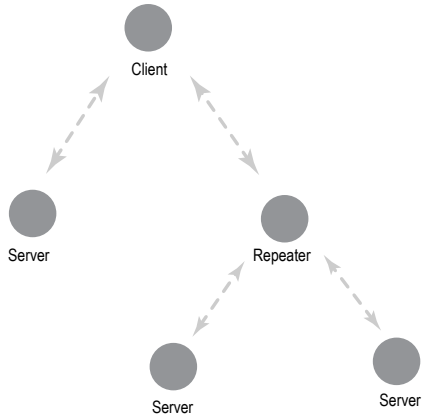

A tree network using MultiHop radios is the most powerful wireless system possible; many repeaters and server radios can be combined to cover vast areas and get around hills or buildings. In the other networks, the wireless "hops" are minimized. In this system, you can "hop" as much as you need to, but the trade-off is speed. This is the slowest of the network layouts.

- Client configuration to broadcast to all devices: DIP switches 1 ON, 2 OFF
- Repeater configuration to broadcast to all devices: DIP switches 1 OFF, 2 ON
- Server configuration to broadcast to all devices: DIP switches 1 OFF, 2 OFF

IMPORTANT: Star and tree topologies use a Broadcast radio technique. Broadcasting allows for many radios and large complex systems but also introduces a small chance that a data packet can be lost. These networks topologies require the control system to automatically resend missing data packets. Most control protocols (like Modbus) will work fine. Other serial stream-based protocols may not be as tolerant and should only be used with point-to-point topologies.

© Banner Engineering Corp. All rights reserved.
www.bannerengineering.com

Apply Power to the R70ER

The Ethernet Data Radio is fitted with a 4-pin M12 connector for fast installations. Use straight splitter cordsets to connect multiple devices and power to the Ethernet Data Radio. For a list of splitter and cordset options, see Accessories.

Wiring for the 4-pin A-code M12 male connector

4-pin A-code M12 Male Connector	Pin	Wire Color	Wiring Description
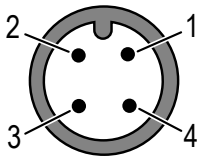	1	Brown (bn)	10 to 30 V DC
	2	White (wh)	Reserved
	3	Blue (bu)	DC common (GND)
	4	Black (bk)	Reserved

Wiring for the 4-pin D-code M12 female Ethernet connector

4-pin D-code M12 female Ethernet connector	Pin	Connection
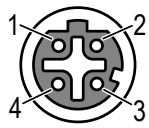	1	TX+
	2	RX+
	3	TX-
	4	RX-

Bind the R70ER Ethernet Radio to Form a Network

To create your network, bind the R70 to the designated controller/primary radio.

Binding the radios ensures all radios within a network communicate only with the other radios within the same network. The data radio client automatically generates a unique binding code when the radio enters binding mode. This code is transmitted to all radios within range that are also in binding mode. After a repeater or server radio is bound, the repeater/server radio accepts data only from the client to which it is bound. The binding code defines the network, and all radios within a network must use the same binding code.

1. Apply power to all radios and place the Ethernet Data Radio radio at least two meters away from the client radio.
2. Remove the cover. See "Configure the R70ER DIP Switches" on page 8.
3. On the client radio: Triple-click the binding button to enter binding mode.

   Both LEDs flash red.
4. On the repeater/server radio: Triple-click the binding button to put the Ethernet Data Radio into binding mode.

   The radio enters binding mode and searches for any client radio in binding mode. While searching for the client radio, the two red LEDs flash alternately. When the radio finds the client radio and is bound, both red LEDs are solid for four seconds, then both red LEDs flash simultaneously four times.
5. Re-install the Ethernet Data Radio's cover.
6. Repeat steps 3 through 5 for as many radios as are needed for your network.
7. On the client radio: After all radios are bound, double-click the binding button to exit binding mode.

   The network begins to form after the client radio exits binding mode.
8. On the client radio: Re-install the cover to protect the button and radio board.

Child Radios Synchronize to the Parent Radios

The synchronization process enables a Sure Cross® radio to join a wireless network formed by a client radio. A simple point-to-point network with one client radio and one server radio synchronizes quickly after power up; larger MultiHop networks may take a few minutes to synchronize. First, all repeater or server radios within range of the client radio wirelessly synchronize to the client radio.

After repeater radios are synchronized to the client radio, any radios that are not in sync with the client but can "hear" the repeater radio will synchronize to the repeater radios. Each repeater “family” that forms a wireless network path creates

© Banner Engineering Corp. All rights reserved.
www.bannerengineering.com

another layer of synchronization process. When testing the devices before installation, verify the radios are at least two meters apart or the communications may fail.

Client Radio LED Behavior

All bound radios set to operate as client radios follow this LED behavior after powering up.

Process Steps	Response	LED 1	LED 2
1	Apply power to the client radio	-	Solid amber
2	The client radio enters RUN mode.	Flashes green	-
	Data packets begin transmitting between the client and its children radios.	-	Flashes amber
	In binding mode	Flashes red	Flashes red

Server Radio LED Behavior

All bound radios set to server or repeater modes follow this LED behavior after powering up.

Process Steps	Response	LED 1	LED 2
1	Apply power to the radio	-	Solid amber (briefly)
2	The server/repeater searches for a parent device.	Flashes red	-
3	A parent device is detected. The client/repeater searches for other parent radios within range.	Solid red	-
4	The server/repeater selects a suitable parent.	-	Solid amber
5	The server/repeater attempts to synchronize to the selected parent.	-	Solid red
6	The server/repeater is synchronized to the parent.	Flashes green	-
7	The server/repeater enters RUN mode.	Solid green, then flashes green	
	Data packets begin transmitting between the server/repeater and its parent radio.	-	Flashes amber
	In binding mode	Flashes red	Flashes red

© Banner Engineering Corp. All rights reserved.
www.bannerengineering.com

Chapter Contents

Apply Power to the DX700ER 13
Configure the DX700ER Data Radio Using the LCD Menu 13
Bind the DX700ER Ethernet Radios to Form a Network 16
Perform a Site Survey 16
Using the MultiHop Configuration Software 17

Chapter 3 Configure the DX700ER Models

Apply Power to the DX700ER

Follow these instructions to apply 12-30 V DC power to the DX700ER using a wall plug.

Equipment used:

- DX700ER Ethernet Radio
- BC-M12M4-22-0.3 0.3 m (1 ft) cordset with a 4-pin M12 quick disconnect fitting
- PSW-24-1 Wall plug power supply; 24 V DC, 1 A

1. Connect the brown wire from the BC-M12M4-22-0.3 cordset to the DX700ER's PW (+ power) terminal.
2. Connect the blue wire from the BC-M12M4-22-0.3 cordset to the DX700ER's GD (- ground) terminal.
3. Connect the PSW-24-1 power supply to the BC-M12M4-22-0.3 cordset.
4. Plug the PSW-24-1 wall plug power supply into a power outlet using the appropriate plug adapter for your region.

Configure the DX700ER Data Radio Using the LCD Menu

The LCD has four control buttons and a menu screen. The four buttons control the navigation of the menu system on the LCD.

Main menu

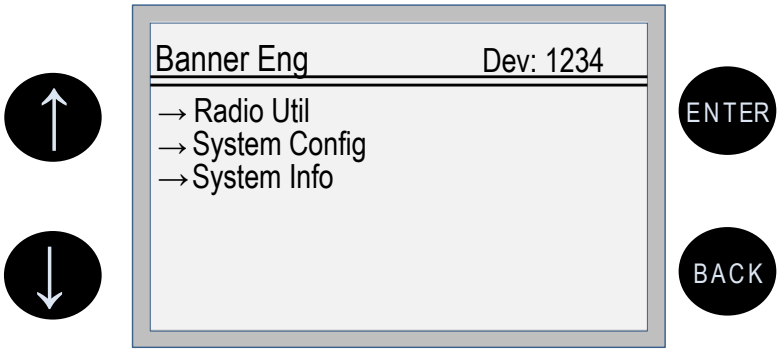

The top-level menu always displays the DX700ER device ID.

- The up and down arrows scroll through display items
- The **ENTER** button selects the highlighted items on the display
- The **BACK** button returns to the previous menu option

The left display column shows an arrow at the beginning of a line if the menu has submenus. The right column shows a vertical line with an arrow at the bottom when additional menu items are present.

Use the **Radio Util** submenus to perform the binding procedure, conduct a site survey, and view network diagnostics.

© Banner Engineering Corp. All rights reserved.
www.bannerengineering.com

Radio Util menu flowchart

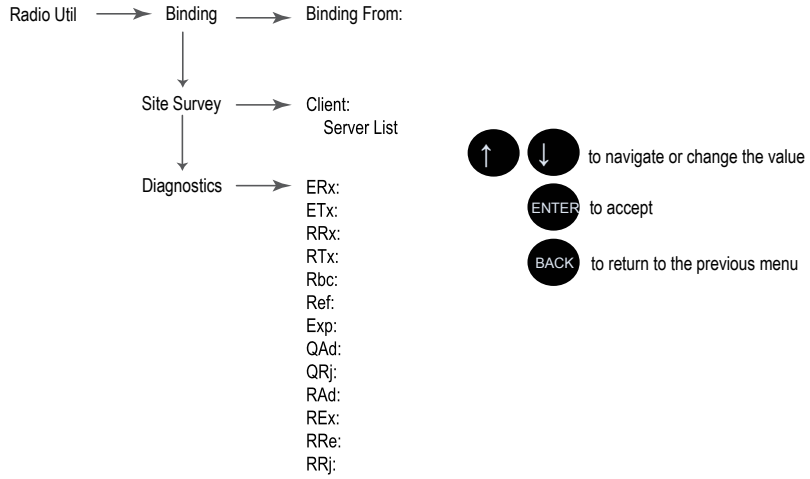

Use the **System Config** submenus to change the configuration parameters of the network radio, Ethernet settings, and display features.

System Config menu flowchart

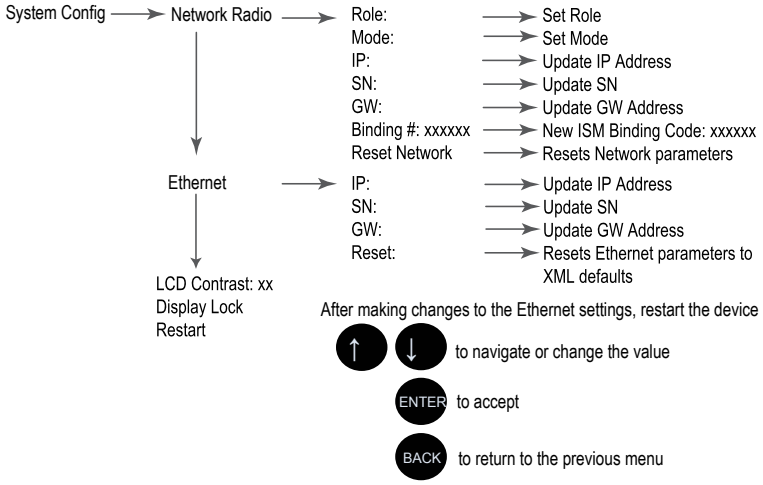

Various DX700ER settings are shown in the **System Info** menu. The controller, Ethernet, and network radio parameters are helpful for debugging network connections and contain read-only information.

System Info menu flowchart

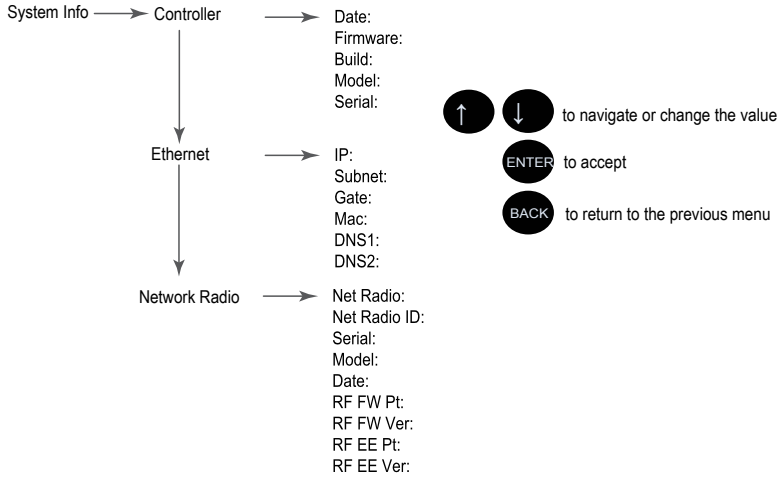

© Banner Engineering Corp. All rights reserved.
www.bannerengineering.com

Code (Short-Form)	Code (Long-Form)	Description
ERx	EthernetRx	Ethernet packets received
ETx	EthernetTx	Ethernet packets transmitted
RRx	RadioRx	Radio packets received
RTx	RadioTx	Radio packets transmitted
Rbc	Rebroadcasts	Number of rebroadcasts by the client radio
Ref	Reflections	Packets denied as reflections
Exp	Expirations	Packets expired (too long in the queue)
QAd	Queue Admissions	Packets accepted
QRj	Queue Rejections	Packets denied (the queue is full)
RAd	Route Additions	New routes added
REx	Route Expirations	Routes expired due to inactivity
RRe	Route Renewals	Routes renewed due to activity
RRj	Route Rejections	Routes not stored (no space)

Configure the Client Radio

In any radio network, there must be one client radio and one or more server/repeater radios.

Follow these steps to configure your client radio. At each menu level, you must press the **ENTER** key to select that menu option and enter the sub-menu.

1. From the main menu, use the arrow keys to navigate to **System Config**. Press **ENTER** to select.
2. Navigate to **Network Radio**. Press **ENTER** to select.
3. Navigate to **Role**. Press **ENTER** to select.
4. Use the arrows to select **Client** and press **ENTER** to accept.
5. Press **ENTER** again to restart the device.
   The device restarts and returns to the main menu.
6. To use repeaters within your network, you must configure the client to recognize repeaters.
   a. From the main menu, use the arrow keys to navigate to **System Config › Network Radio › Mode**.
   b. Select **Repeater** and press **ENTER** to accept.
   c. Press **ENTER** to restart the device.

   The device restarts and returns to the main menu.

Configure the Server Radio

1. From the main menu, use the arrow keys to navigate to **System Config**. Press **ENTER** to select.
2. Navigate to **Network Radio**. Press **ENTER** to select.
3. Navigate to **Role**. Press **ENTER** to select.
4. Use the arrows to select **Server** and press **ENTER** to accept.
5. Press **ENTER** again to restart the device.
   The device restarts and returns to the main menu.
6. Repeat these steps for all the server radios in your network.

Configure the Repeater Radio

1. From the main menu, use the arrow keys to navigate to **System Config**. Press **ENTER** to select.
2. Navigate to **Network Radio**. Press **ENTER** to select.
3. Navigate to **Role**. Press **ENTER** to select.
4. Use the arrows to select **Server** and press **ENTER** to accept.
5. Press **ENTER** again to restart the device.

© Banner Engineering Corp. All rights reserved.
www.bannerengineering.com

The device restarts and returns to the main menu.

6. From the main menu, use the arrow keys to navigate to **System Config › Network Radio › Mode**.
7. Use the arrows to select **Repeater** and press **ENTER** to accept.
8. Press **ENTER** again to restart the device.
   The device restarts and returns to the main menu.
9. Repeat these steps for all the repeaters in your network.

Bind the DX700ER Ethernet Radios to Form a Network

To create your network, bind the DX700ER server and repeater radios to the designated client radio.

Binding the radios ensures all radios within a network communicate only with the other radios within the same network. The client data radio generates a unique binding code when it enters binding mode. This code is transmitted to all radios within range that are also in binding mode. After a server or repeater radio is bound, the server or repeater radio accepts data only from the client to which it is bound. The binding code defines the network, and all radios within a network must use the same binding code.

1. Apply power to all radios and place the DX700ER radios at least two meters apart.
2. On the client radio: Use the arrow keys to navigate to **Radio Util › Binding**.
3. Press **ENTER** to start the binding procedure.
   The screen indicates the client is in binding mode.
4. Put the server or repeater radio into building mode.

For a DX700ER server/repeater	For an R70ER server/repeater
Use the arrow keys to navigate to **Radio Util › Binding**.	Triple-click the binding button.
Press **ENTER** to start the binding procedure.	
The screen indicates the repeater/server is in binding mode and will indicate Bound after the procedure is completed. Press **BACK** on the server or repeater radio to exit binding mode and return to the main menu.	The radio enters binding mode and searches for any client radio in binding mode. While searching for the client radio, the two red LEDs flash alternately. When the radio finds the client radio and is bound, both red LEDs are solid for four seconds, then both red LEDs flash simultaneously four times.

5. Repeat steps 2 through 4 on all server or repeater radios that will be communicating with this client radio.
6. Press **BACK** on the client radio to exit binding mode and return to the main menu.
7. Allow the radios to synchronize and form their routing tables.

Child Radios Synchronize to the Parent Radio. The synchronization process enables a Sure Cross® radio to join a wireless network formed by a client radio. A simple point-to-point network with one client and one server radio synchronizes quickly after power-up; larger MulitHop networks may take a few minutes to synchronize. First, all radios within range of the client radio wirelessly synchronize to the client radio. These radios may be repeater radios or server radios. After repeater radios synchronize to the client radio, any radios that are not in sync but can “hear” the repeater radio synchronize to the repeater radio. Each repeater “family” that forms a wireless network path creates another layer of synchronization process. When testing the devices before installation, verify the radios are at least two meters apart or the communications may fail.

Perform a Site Survey

After placing your radios in the network locations, but before permanently installing them, perform a Site Survey to analyze the radio signal strength of your chosen location.

A site survey analyzes the radio signal between a MultiHop child radio and its parent and reports the number of data packets missed or received at relative signal strengths. Performing a site survey prior to permanently installing the network allows you

© Banner Engineering Corp. All rights reserved.

to pre-screen a site for its radio communication potential, compare link quality in different locations, or assist with final antenna placement and aiming.

Site surveys are conducted by the client radio within the network. A client radio is always the parent and the server radios are always the children within the radio communication relationship. A repeater, however, may be both a child radio to the client or another repeater, but can also be a parent radio to other repeater or server radios.

Other radios bound within the same network remain synchronized to the network, but are blocked from sending data while the site survey is running. The site survey analyzes the signal strength between the selected child and its parent radio only. Disable site survey on one radio before initiating it from another.

To conduct a Site Survey using the client radio, follow these instructions.

1. On the client radio: Use the arrow keys to navigate to **Radio Util › Site Survey**.
2. Allow the list of network devices to populate the next screen.
3. Use the arrow keys to select the server or repeater radio to analyze, then press **ENTER**.
   The site survey begins. After the survey is complete, the results display on the LCD.
4. Examine reception readings of the devices at various locations. When possible, install all devices to optimize the percentage of **Yellow** and **Green** data packets received.
   - **Green** displays the percentage of received packets at excellent signal strength.
   - **Yellow** displays the percentage of received packets at a good signal strength.
   - **Red** displays the percentage of received packets at a marginal signal strength.
   - **Misses** displays the percentage of missed packets.
5. To exit the site survey, press **BACK**.

Using the MultiHop Configuration Software

The MultiHop Configuration Software can be used with the DX700ER Ethernet Radios to examine network topology, conduct a site survey, or adjust parameter settings.

Connect the DX700ER Ethernet Data Radio directly to the computer with the appropriate cable using the USB Type B connection.

1. Launch the MultiHop Configuration Software.
2. Go to the **Device › Connection Settings** menu.
3. Select **Serial DXM** and choose the respective **COM port**.
4. Click **Connect**.
5. Go to the **Network › Network and Device Overview** screen.
6. Enter the client device ID into the **Device Address** field.
7. Click **Read** to view the wireless network.

To conduct a signal strength analysis, select **Site Survey**, then click **Read**. Depending on the size of your network, analyzing the signal strength and displaying the network structure may take a few minutes (about 15 seconds per radio.)

To run a Site Survey analysis on an individual radio, click once on the device in the list, then right-click and select Site Survey. Depending on the radio link quality, the retry count and timeout parameters may need to be adjusted. Those parameters are found under the **Device › Connection Settings** menu.

© Banner Engineering Corp. All rights reserved.

Chapter Contents

Conduct a Ping Test Using Ethernet Cables 18
Replace the Ethernet Cables with a Data Radio 19
Troubleshooting the Ethernet Network 19
Installing Your Sure Cross® Radios 20

Chapter 4 Setting Up Your Ethernet Data Radio Network

This Quick Start Guide outlines the steps necessary to configure a simple point-to-point MultiHop Ethernet data radio wireless link between two devices. We recommend completing these steps to avoid common configuration mistakes.

Conduct a Ping Test Using Ethernet Cables

Follow these steps to create a working network without the radios.

Conducting a ping test using Ethernet cables is highly recommended because it verifies the Ethernet devices' IP addresses are properly configured before attempting to replace the cabled connection with a wireless connection.

Use the Ping command to test a small amount of data and verify the switch traffic LEDs are not flickering constantly and rapidly. **A managed switch may be required because excessive Ethernet traffic will overload the radios.**

Example hard-wired connection between a PC, switch, and PLC

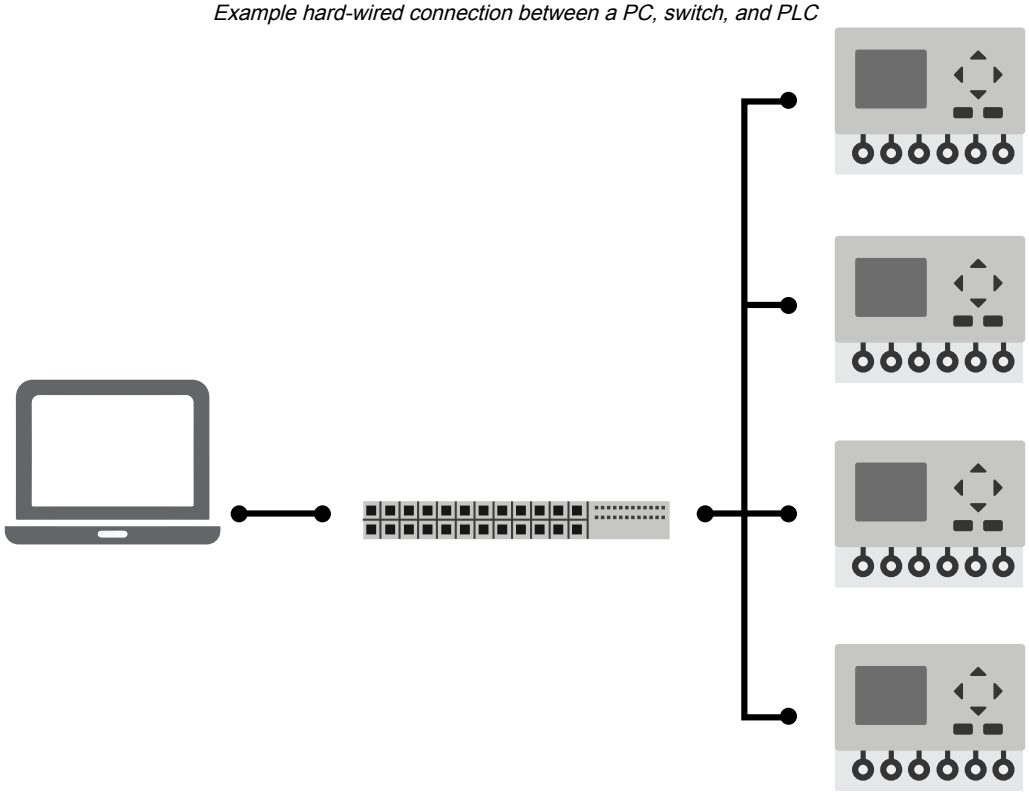

1. Assemble the two devices you would like to connect wirelessly and connect them with a wired connection.
   For example, if you are going to be sending signals between a PC and a PLC, connect your PC to the PLC using an Ethernet cable and a switch first to test communication.
2. Configure the IP addresses of the computer and the PLC.
3. Verify Ethernet connectivity before installing the radios.
   a. To send a Ping signal, click on the Windows Start menu.
   b. In the Search All Programs and Files window, type Cmd and press the return key. A DOS window pops up.
   c. Type PING 192.168.0.1 (or whatever your PLC's IP address is).

© Banner Engineering Corp. All rights reserved.
www.bannerengineering.com

The DOS window reports back the ping statistics as the packets sent, received, or lost and the round-trip time.

Replace the Ethernet Cables with a Data Radio

Example wireless connection

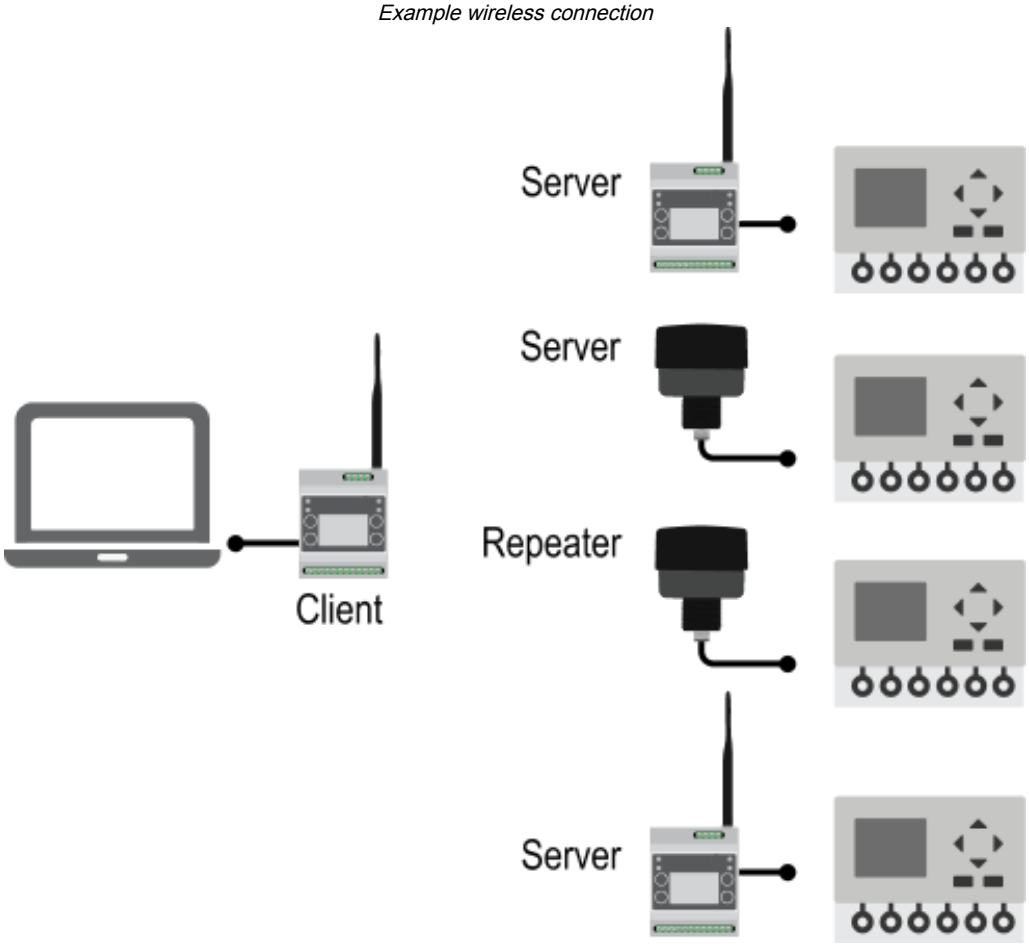

1. Configure the data radio(s) (see "Configure the R70ER DIP Switches" on page 8 or "Configure the DX700ER Data Radio Using the LCD Menu" on page 13).
2. Connect the data radio(s) to power (see "Apply Power to the R70ER" on page 11 or "Apply Power to the DX700ER" on page 13).
3. Bind the data radio(s) servers to their client (see "Bind the R70ER Ethernet Radio to Form a Network" on page 11 or "Bind the DX700ER Ethernet Radios to Form a Network" on page 16).
4. Perform a site survey (see "Perform a Site Survey" on page 16).
5. Remove the Ethernet cables from the switch and plug the cables into two data radios placed at least 6 feet apart. Do not change the IP address of the radios. They will relay all Ethernet traffic by default. Think of them as simple cable replacements.

   After both radios reboot, the ping command should work again, this time using the wireless connection. To test the connection, initiate other data traffic, such as the PLC program, Web pages, or I/O traffic.

The green light on the right side of the Ethernet port indicates a proper electrical connection.

If the LED is not green, try a new cable or switch. The yellow light blinks when an Ethernet packet is received properly.

Troubleshooting the Ethernet Network

Green LED: A quick green flash every 4 seconds indicates the radio is OK or working properly. A red flash every 4 seconds indicates a lost radio connection; this radio is not communicating with another radio.

© Banner Engineering Corp. All rights reserved.
www.bannerengineering.com

R70ER binding button, LEDs, and DIP switches

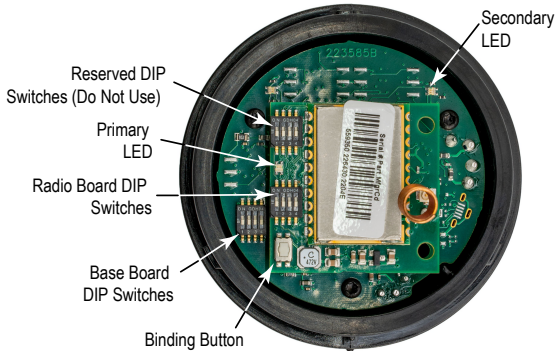

DX700ER radio board

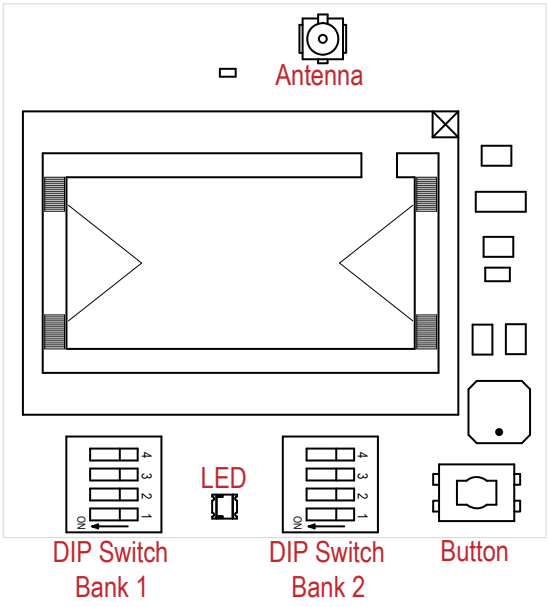

To solve this communication problem:

1. Verify only one radio is configured to operate as a client radio and one radio is configured as a server radio.
2. Run the binding procedure again.
3. Verify the radios are at least 6 feet apart.
4. Perform a site survey.

Amber LED: An amber flashing LED indicates data packets are being sent. If this is flashing very quickly and the network does not work, or works intermittently, the network is likely overloaded.

Stop all Ethernet traffic and test the connection using the Ping command. If the Ping works reliably, the wireless connection is good, and you must reduce your network traffic.

For more complex systems:

- Always use a managed switch or isolate the wireless Ethernet network
- Eliminate unnecessary traffic
- Turn IGMP Snooping OFF

Installing Your Sure Cross® Radios

Please refer to one of these instruction manuals to install your wireless network components.

- DX80 Performance Wireless I/O Network Instruction Manual: 132607
- MultiHop Data Radio Instruction Manual: 151317

© Banner Engineering Corp. All rights reserved.
www.bannerengineering.com

Chapter Contents

Chapter 5 Accessories

4-pin A-Code Double-Ended M12 Female to M12 Male Cordsets (datasheet p/n 236186)				
Model	**Length**	**Dimensions (mm)**	**Pinouts**	
BC-M12F4-M12M4-22-1	1 m (3.28 ft)	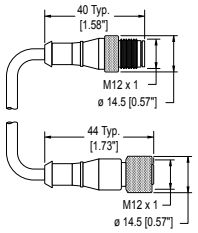	Female 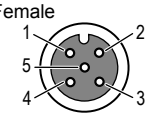 Male 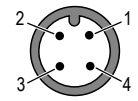	1 = Brown 2 = White 3 = Blue 4 = Black 5 = Unused
BC-M12F4-M12M4-22-2	2 m (6.56 ft)			
BC-M12F4-M12M4-22-3	3 m (9.84 ft)			
BC-M12F4-M12M4-22-4	4 m (13.12 ft)			
BC-M12F4-M12M4-22-5	5 m (16.4 ft)			
BC-M12F4-M12M4-22-10	10 m (30.81 ft)			
BC-M12F4-M12M4-22-15	15 m (49.2 ft)			

4-pin A-Code Double-Ended M12 Female Right-Angle to M12 Male Right-Angle Cordsets (datasheet p/n 236186)				
Model	**Length**	**Dimensions (mm)**	**Pinouts**	
BC-M12F4A-M12M4A-22-0.3	0.3 m (1 ft)	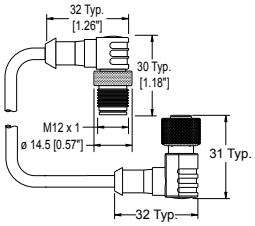	Female 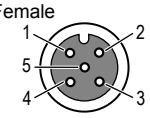 Male 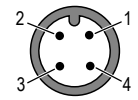	1 = Brown 2 = White 3 = Blue 4 = Black 5 = Unused
BC-M12F4A-M12M4A-22-1	1 m (3.28 ft)			
BC-M12F4A-M12M4A-22-2	2 m (6.56 ft)			
BC-M12F4A-M12M4A-22-5	5 m (16.4 ft)			
BC-M12F4A-M12M4A-22-8	8 m (26.25 ft)			
BC-M12F4A-M12M4A-22-10	10 m (30.81 ft)			
BC-M12F4A-M12M4A-22-15	15 m (49.2 ft)			

4-pin Single-Ended M12 Female Cordsets (datasheet p/n 235937)				
Model	**Length**	**Dimensions (mm)**	**Pinout (Female)**	
BC-M12F4-22-1	1 m (3.28 ft)	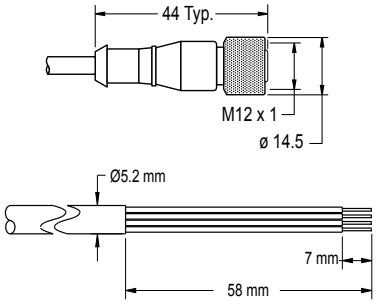	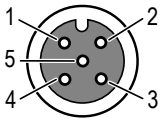	1 = Brown 2 = White 3 = Blue 4 = Black 5 = Unused
BC-M12F4-22-2	2 m (6.56 ft)			
BC-M12F4-22-5	5 m (16.4 ft)			
BC-M12F4-22-8	8 m (26.25 ft)			
BC-M12F4-22-10	10 m (30.81 ft)			
BC-M12F4-22-15	15 m (49.2 ft)			
BC-M12F4-22-20	20 m (65.61 ft)			
BC-M12F4-22-25	25 m (82.02 ft)			
BC-M12F4-22-30	30 m (98.42 ft)			

© Banner Engineering Corp. All rights reserved.
www.bannerengineering.com

4-pin Single-Ended M12 Female Right-Angle Cordsets (datasheet p/n 235937)				
Model	**Length**	**Dimensions (mm)**	**Pinout (Female)**	
BC-M12F4A-22-1	1 m (3.28 ft)	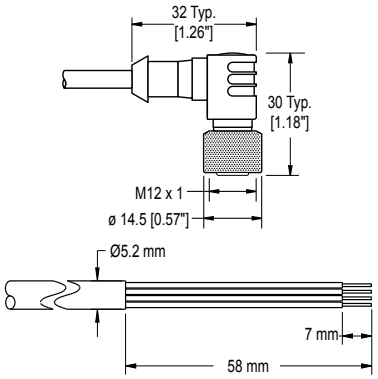	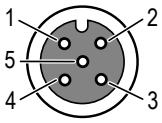	1 = Brown 2 = White 3 = Blue 4 = Black 5 = Unused c UL us LISTED
BC-M12F4A-22-2	2 m (6.56 ft)			
BC-M12F4A-22-5	5 m (16.4 ft)			
BC-M12F4A-22-8	8 m (26.25 ft)			
BC-M12F4A-22-10	10 m (30.81 ft)			
BC-M12F4A-22-15	15 m (49.2 ft)			

Double-Ended 4-pin M12 Male D-code to 8-Pin RJ45 Male Shielded Ethernet Cordsets				
Model	**Length**	**Dimensions**	**RJ45 Pinout (Male)**	**M12 Pinout (Male)**
STP-M12D-403	0.9 m (2.95 ft)	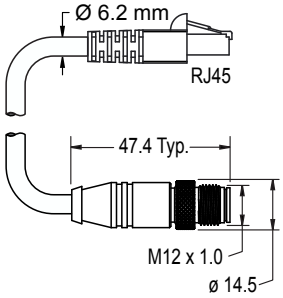		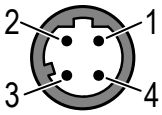
STP-M12D-406	1.83 m (6 ft)			
STP-M12D-415	4.57 m (15 ft)			
STP-M12D-430	9.14 m (30 ft)		1 = White/Orange 2 = Orange 3 = White/Blue 6 = Blue	1 = White/orange 2 = White/blue 3 = Orange 4 = Blue

4-Pin D-Code Double-Ended M12 Male Ethernet Cordsets				
Model	**Length**	**Style**	**Dimensions**	**Pinout (Male)**
BCD-M12DM-M12DM-0.3M	0.3 m (13 in)	Straight	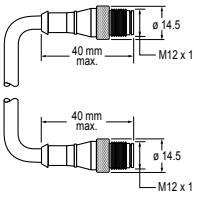	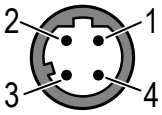 1 = White/Orange 2 = White/Green 3 = Orange 4 = Green
BCD-M12DM-M12DM-1M	1 m (39 in)			

4-pin Single-Ended M12 Male Cordsets (datasheet p/n 235940)				
Model	**Length**	**Dimensions (mm)**	**Pinout (Male)**	
BC-M12M4-22-0.3	0.3 m (1 ft)	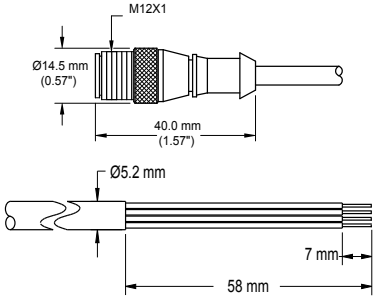	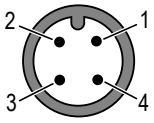	1 = Brown 2 = White 3 = Blue 4 = Black
BC-M12M4-22-1	1 m (3.28 ft)			
BC-M12M4-22-2	2 m (6.56 ft)			
BC-M12M4-22-5	5 m (16.4 ft)			
BC-M12M4-22-8	8 m (26.25 ft)			
BC-M12M4-22-10	10 m (30.81 ft)			
BC-M12M4-22-15	15 m (49.2 ft)			

© Banner Engineering Corp. All rights reserved.
www.bannerengineering.com

WC-R70 Washdown Cover
- FDA-grade silicone
- Fits R70 data radios
- IP67 and IP69K rated

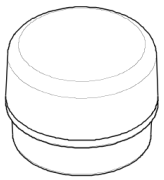

LMB30LP
- Low profile
- 30 mm mounting hole
- 300 series stainless steel
- CAD Files: DXF, PDF, IGS, STP

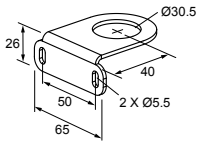

© Banner Engineering Corp. All rights reserved.
www.bannerengineering.com

Chapter Contents

Warnings 24
Banner Engineering Corp Limited Warranty 24

Chapter 6 Product Support and Maintenance

Warnings

WARNING:
- **Do not use this device for personnel protection**
- Using this device for personnel protection could result in serious injury or death.
- This device does not include the self-checking redundant circuitry necessary to allow its use in personnel safety applications. A device failure or malfunction can cause either an energized (on) or de-energized (off) output condition.

IMPORTANT: Please download the complete Sure Cross R70ER and DX700ER Ethernet Data Radios technical documentation, available in multiple languages, from www.bannerengineering.com for details on the proper use, applications, Warnings, and installation instructions of this device.

IMPORTANT: Por favor descargue desde www.bannerengineering.com toda la documentación técnica de los Sure Cross R70ER and DX700ER Ethernet Data Radios, disponibles en múltiples idiomas, para detalles del uso adecuado, aplicaciones, advertencias, y las instrucciones de instalación de estos dispositivos.

IMPORTANT: Veuillez télécharger la documentation technique complète des Sure Cross R70ER and DX700ER Ethernet Data Radios sur notre site www.bannerengineering.com pour les détails sur leur utilisation correcte, les applications, les notes de sécurité et les instructions de montage.

Install and properly ground a qualified surge suppressor when installing a remote antenna system. Remote antenna configurations installed without surge suppressors invalidate the manufacturer's warranty. Keep the ground wire as short as possible and make all ground connections to a single-point ground system to ensure no ground loops are created. No surge suppressor can absorb all lightning strikes; do not touch the Sure Cross® device or any equipment connected to the Sure Cross® device during a thunderstorm.

Exporting Sure Cross® Radios. It is our intent to fully comply with all national and regional regulations regarding radio frequency emissions. **Customers who want to re-export this product to a country other than that to which it was sold must ensure the device is approved in the destination country.** The Sure Cross wireless products were certified for use in these countries using the antenna that ships with the product. When using other antennas, verify you are not exceeding the transmit power levels allowed by local governing agencies. This device has been designed to operate with the antennas listed on Banner Engineering's website and having a maximum gain of 9 dBm. Antennas not included in this list or having a gain greater than 9 dBm are strictly prohibited for use with this device. The required antenna impedance is 50 ohms. To reduce potential radio interference to other users, the antenna type and its gain should be so chosen such that the equivalent isotropically radiated power (EIRP) is not more than that permitted for successful communication. Consult with Banner Engineering Corp. if the destination country is not on this list.

IMPORTANT:
- **Never operate a radio without connecting an antenna**
- Operating radios without an antenna connected will damage the radio circuitry.
- To avoid damaging the radio circuitry, never apply power to a Sure Cross® Performance or Sure Cross® MultiHop radio without an antenna connected.

IMPORTANT:
- **Electrostatic discharge (ESD) sensitive device**
- ESD can damage the device. Damage from inappropriate handling is not covered by warranty.
- Use proper handling procedures to prevent ESD damage. Proper handling procedures include leaving devices in their anti-static packaging until ready for use; wearing anti-static wrist straps; and assembling units on a grounded, static-dissipative surface.

Banner Engineering Corp Limited Warranty

Banner Engineering Corp. warrants its products to be free from defects in material and workmanship for one year following the date of shipment. Banner Engineering Corp. will repair or replace, free of charge, any product of its manufacture which, at the time it is returned to the factory, is found to have been

© Banner Engineering Corp. All rights reserved.
www.bannerengineering.com

defective during the warranty period. This warranty does not cover damage or liability for misuse, abuse, or the improper application or installation of the Banner product.

THIS LIMITED WARRANTY IS EXCLUSIVE AND IN LIEU OF ALL OTHER WARRANTIES WHETHER EXPRESS OR IMPLIED (INCLUDING, WITHOUT LIMITATION, ANY WARRANTY OF MERCHANTABILITY OR FITNESS FOR A PARTICULAR PURPOSE), AND WHETHER ARISING UNDER COURSE OF PERFORMANCE, COURSE OF DEALING OR TRADE USAGE.

This Warranty is exclusive and limited to repair or, at the discretion of Banner Engineering Corp., replacement. **IN NO EVENT SHALL BANNER ENGINEERING CORP. BE LIABLE TO BUYER OR ANY OTHER PERSON OR ENTITY FOR ANY EXTRA COSTS, EXPENSES, LOSSES, LOSS OF PROFITS, OR ANY INCIDENTAL, CONSEQUENTIAL OR SPECIAL DAMAGES RESULTING FROM ANY PRODUCT DEFECT OR FROM THE USE OR INABILITY TO USE THE PRODUCT, WHETHER ARISING IN CONTRACT OR WARRANTY, STATUTE, TORT, STRICT LIABILITY, NEGLIGENCE, OR OTHERWISE.**

Banner Engineering Corp. reserves the right to change, modify or improve the design of the product without assuming any obligations or liabilities relating to any product previously manufactured by Banner Engineering Corp. Any misuse, abuse, or improper application or installation of this product or use of the product for personal protection applications when the product is identified as not intended for such purposes will void the product warranty. Any modifications to this product without prior express approval by Banner Engineering Corp will void the product warranties. All specifications published in this document are subject to change; Banner reserves the right to modify product specifications or update documentation at any time. Specifications and product information in English supersede that which is provided in any other language. For the most recent version of any documentation, refer to: www.bannerengineering.com.

For patent information, see www.bannerengineering.com/patents.

© Banner Engineering Corp. All rights reserved.

LinkedIn

X

Facebook

Instagram



© 2026. All rights reserved.