SSM-FM-11A Safe Speed Monitoring Module Product Manual

Original Instructions
p/n: 242757 Rev. C
27-Jul-26
© Banner Engineering Corp. All rights reserved. www.bannerengineering.com

ПРОМЭЛЕКТРОНИКА/ sales@prom-elec.com

Contents

Chapter 1 Features 3
Models 3
Important... Read this before proceeding! 3
Specifications 4
Dimensions 6

Chapter 2 Overview 7
Indicators 7
Operation and Requirements 7

Chapter 3 Installation Instructions 9
Mechanical Installation 9
Electrical Installation 9
Input Sensor Connections 9
Periodic Checks 9
Reset and Startup Conditions 9
Connection to the Machine to be Controlled 10
External Device Monitoring 12
Overvoltage Category II and III Installations (EN 50178 and IEC 60664-1) 12
Auxiliary Monitor Contact 12

Chapter 4 Configuration 13
Adjusting the Switch Point Value 13
Approximate Method 14
More Precise Method 14
Adjusting Simultaneity 14
Linear or Rotational Movement 15
Linear Motion Applications (Monitoring the Speed of a Conveyor) 15
Rotational Motion Applications 15
Under-Speed Monitoring Applications 16
Example: ipm = 15 16
Configuring for Under-Speed Detection 16
Configuring for Zero Speed Detection 17
Over-speed Monitoring Applications 18
Configuring for Over-Speed Detection 18

Chapter 5 Checkout Procedure 20

Chapter 6 Product Support and Maintenance 21
EU/UK Declaration of Conformity (DoC) 21
Repairs 21
Banner Engineering Corp Limited Warranty 21

© Banner Engineering Corp. All rights reserved. www.bannerengineering.com

Chapter 1 Features

For over-speed and under-speed detection

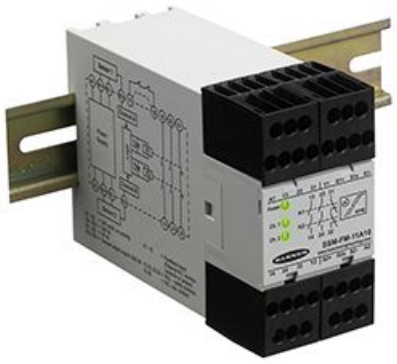

- Dual-channel redundancy
- Monitors two sensors with PNP outputs
- Monitors rotation (rpm) or linear movement
- LED indication for power, input 1 and input 2
- 24 V AC/DC operation
- Feedback input monitors external machine control elements
- Two normally open (NO) and one normally closed (NC) output switching channels for connection to control-reliable power interrupt circuits rated at 4 A
- Stop Category 0, per ISO 13850
- SIL Claimed Level 3 to EN ISO 61508
- Performance Level (PL) e / Category 3 to DIN EN ISO 13849-1
- DIN-rail mountable 45 mm wide housing with removable terminal blocks
- Energizes output relays (closes normally open contacts) when the speed drops below a set value for under-speed monitoring
- De-energizes output relays (opens normally open contacts) when the speed rises above a set value for over-speed monitoring

WARNING:

- **Not a stand-alone point-of-operation guarding device**
- This Banner Engineering Corp. device is not a stand-alone point-of-operation guarding device, as defined by OSHA regulations. Failure to install point-of-operation guards on hazardous machinery can result in a dangerous condition that could lead to serious injury or death.
- Install point-of-operation guarding devices, such as safety light curtains and/or hard guards, to protect personnel from hazardous machinery.

Models

Model	Detectable Speed Range[1]
SSM-FM-11A10	5 to 10,500 ipm
SSM-FM-11A20	10 to 20,000 ipm

Important... Read this before proceeding!

The user is responsible for satisfying all local, state, and national laws, rules, codes, and regulations relating to the use of this product and its application. Banner Engineering Corp. has made every effort to provide complete application, installation, operation, and maintenance instructions. Please contact a Banner Applications Engineer with any questions regarding this product.

The user is responsible for making sure that all machine operators, maintenance personnel, electricians, and supervisors are thoroughly familiar with and understand all instructions regarding the installation, maintenance, and use of this product, and with the machinery it controls. The user and any personnel involved with the installation and use of this product must be thoroughly familiar with all applicable standards, some of which are listed within the specifications. Banner Engineering Corp. makes no claim regarding a specific recommendation of any organization, the accuracy or effectiveness of any information provided, or the appropriateness of the provided information for a specific application.

Applicable U.S. Standards

[1] The unit ipm (impulses per minute) may be equal to actual machine rpm, or may be a multiple, depending on the number of sensing points used.

© Banner Engineering Corp. All rights reserved.
www.bannerengineering.com

ANSI B11.0 Safety of Machinery

NFPA 79 Electrical Standard for Industrial Machinery

ANSI/RIA R15.06 Safety Requirements for Industrial Robots and Robot Systems

Applicable International Standards

ISO 12100 Safety of Machinery – General Principles for Design – Risk Assessment and Risk Reduction

IEC 62061 Safety of Machinery – Functional Safety of Safety-Related Control Systems

ISO 13849-1 Safety of Machinery – Safety-Related Parts of Control Systems – Part 1: General Principles for Design

Specifications

Supply Voltage and Current

24 V AC/DC, no polarity

Nominal Frequency: 50/60 Hz (Frequency Range: 45 Hz to 65 Hz)

AC: 24 V +10% / -15%

DC: 24 V ±10%

Power Consumption

Approx. 4VA/2.5 W

Performance

Startup Reset Time: 1.5 seconds

Hysteresis: 6% typical

Housing

Polycarbonate. Rated NEMA 1, IEC IP20 (IEC/EN 60 529)

Terminal Torque

0.8 N·m (7 lb-in)

Maximum Wire Cross-Section for Connection

Each 1 × 2.5 mm^2 stranded ferruled

Each 1 × 4 mm^2 solid

Each 2 × 1.5 mm^2 stranded ferruled

Mounting

Mounts to standard 35 mm DIN rail track. Safety Module must be installed inside an enclosure rated NEMA 3 (IEC IP54) or better.

Design Standards

PL e Cat 3 per EN/ISO 13849-1

SIL Claimed Level (SIL) 3 to IEC/EN 61508

Safety Integrity Level (SIL) 3 to IEC/EN 61511

Input Requirements for PNP Input Sensors

PNP Input Sensors: 24 V DC (terminals S1s and S2s)

Input current min.: 3 mA Input current max.: 25 mA

Min. pulse time: 1 ms On, 1 ms Off

Maximum IPM at Inputs S1s and S2s

30,000

Under-speed Output Response Time

See formula

Over-speed Output Response Time

SSM-FM-11A10: Range 5…10,500: tR = 700 ms typ.

SSM-FM-11A20: Range 10…20,000: tR = 350 ms typ.

Switching Capacity to AC 15

3A / 230 V AC for N.O. contacts (per IEC/EN 60 947-5-1)

1A / 230 V AC for N.C. contact (per IEC/EN 60 947-5-1)

Certifications

Electrical Life (Switching cycles of the output contacts, resistive load)

350,000 cycles at 920 VA

1,000,000 cycles at 440 VA

2,000,000 cycles at 250 VA

5,000,000 cycles at 125 VA

Operating Conditions

Operating Temperature: –25 °C to +60 °C (–13 °F to +140 °F)

Storage Temperature: –25 °C to +85 °C (–13 °F to +185 °F)

Altitude: Up to 2000 m (6561.7 ft)

UL Data

The safety functions were not evaluated by UL. Listing is accomplished according to the requirements of Standard UL 508, "general use applications"

Switching Capacity

Ambient temperature 60 °C (140 °F):

Pilot duty B300
4 A 250 V AC G.P.
4 A 24 V DC

Wire Connection

60 °C (140 °F)/70 °C (158 °F) copper conductors only
AWG 20 - 12 Sol Torque 0.8 N·m
AWG 20 - 14 Str Torque 0.8 N·m

Output Configuration

Outputs K1 & K2: two redundant (total of four) safety relay N.O. (forced-guided) contacts—AgNi, gold flashed; one auxiliary N.C. contact—AgNi, gold flashed

Contact ratings (all N.O. and N.C. output contacts): 2 normally open (N.O.) output channels and 1 normally closed (N.C.) aux. output

Current Rating:

Thermal Current Ith: 4A

Mechanical Life:

More than 50,000,000 operations
at 5 A, 230 Vac cos ϕ = 1: ≥ 200,000 operations

Adjustable Setting Ranges (impulses/minute)

SSM-FM-11A10: 5…40 ipm, 35…340 ipm, 300…2,700 ipm, or 1,200…10,500 ipm

SSM-FM-11A20: 10…80 ipm, 80…650 ipm, 600…5,300 ipm, 2,400…20,000 ipm

Indicators

Three green LEDs: Power On, Channel 1 active, and Channel 2 active

Vibration Resistance

10 to 55 Hz at 0.35 mm displacement per IEC 60068-2-6

© Banner Engineering Corp. All rights reserved.

Required Overcurrent Protection

WARNING: Electrical connections must be made by qualified personnel in accordance with local and national electrical codes and regulations.

Overcurrent protection is required to be provided by end product application per the supplied table.

Overcurrent protection may be provided with external fusing or via Current Limiting, Class 2 Power Supply.

Supply wiring leads < 24 AWG shall not be spliced.

For additional product support, go to www.bannerengineering.com.

Supply Wiring (AWG)	Required Overcurrent Protection (A)	Supply Wiring (AWG)	Required Overcurrent Protection (A)
20	5.0	26	1.0
22	3.0	28	0.8
24	2.0	30	0.5

Demand to our device based on the evaluated necessary safety levels of the application		Interval for cyclic test of the safety function
According to EN ISO 13849-1	PL e with Cat. 3	Once per month
	PL d with Cat. 3	Once per year
According to IEC/EN 61508	SIL 3 with HFT = 1	Once per month
	SIL 2 with HFT = 1	Once per year
According to EN 61511	SIL 3	Once per year

EN ISO 13849-1		
Category	3	
PL	e	
$MTTF_d$	280.3	a (year)
DC_{avg}	99.0	%
d_{op}	365	d/a (days/year)
h_{op}	24	h/d (hours/days)
t_{cycle}	3600	s/cycle
	1	/h (hour)

IEC/EN		
SIL	3	IEC/EN 61508; IEC/EN 61511
HFT(2)	1	
DC	99.0	%
PFH_d	1.74E-10	h^{-1}
T_1	20	a (year)

(2) Hardware Failure Tolerance

© Banner Engineering Corp. All rights reserved.
www.bannerengineering.com

Dimensions

Dimensions—SSM-FM-11A20

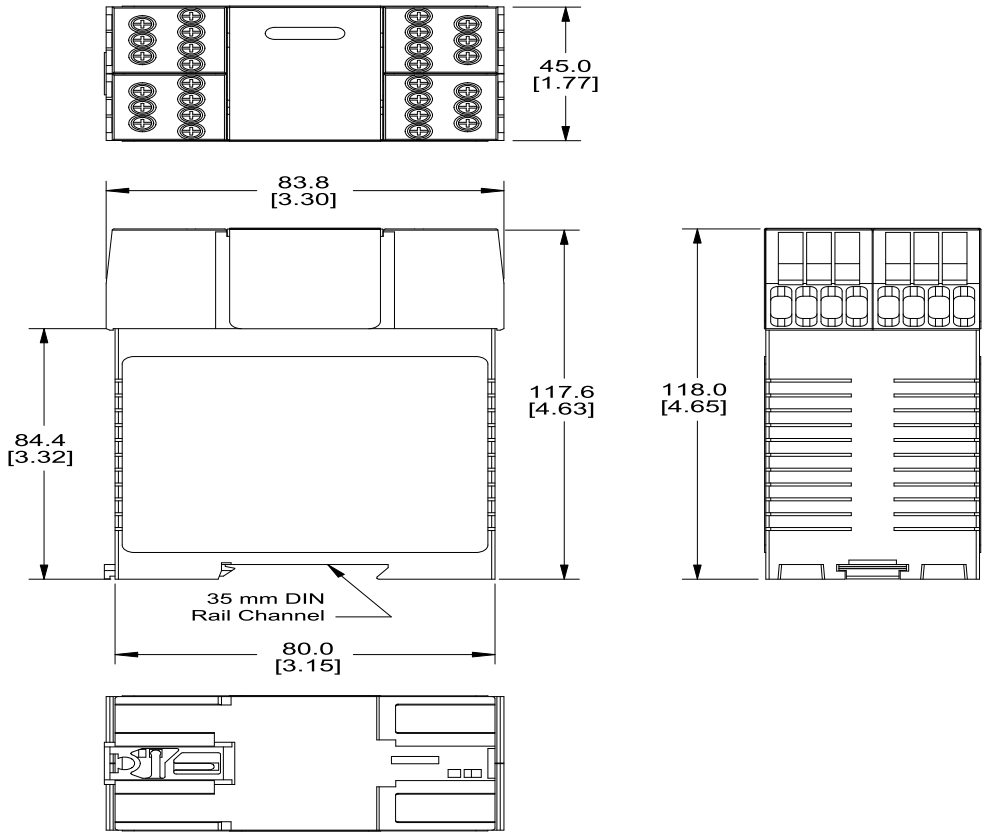

© Banner Engineering Corp. All rights reserved.
www.bannerengineering.com

Chapter 2 Overview

The SSM-FM-11A10 and SSM-FM-11A20 Safe Speed Monitoring Module ("the Module") can be used to monitor a rotating or laterally moving device's stopping, starting, or speed. The Module requires signals from two independent sensors.

As an under-speed (may also be called standstill) monitor, the Module is often used in combination with hard guarding, access doors, and safety gates with solenoid-lock or -unlock safety switches. When the speed of the monitored device drops below the set switch point (where its speed is no longer considered dangerous), the Module closes its normally open safety output contacts, applying power to the safety switch solenoid, releasing the switch lock and enabling the operator to open the safety gate.

In over-speed monitor applications, the normally open safety contacts are closed for operation (when the motor speed of the monitored device is below the set switch point). When the speed exceeds the set value, indicating a too-high (dangerous) speed, the safety output contacts open.

> **IMPORTANT: Standstill Detection (zero-speed)**. The module counts pulses to determine the speed of the monitored device. The fewest pulses per minute that the module can detect is either 5 or 10 per minute. The module can detect that the system is barely moving but not truly zero-speed (standstill).

Indicators

	Machine stopped/under-speed monitoring applications	Over-speed monitoring applications	
1. Power ON (green) when	Power is applied	Power is applied	*SSM-FM-11A... features and terminal locations* 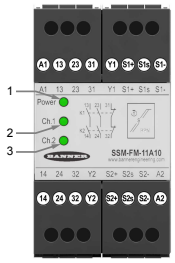
2. Safety output channel 1 ON (green) when	Machine stopped/under-speed signal detected on Input Channel 1	No over-speed detected on Input Channel 1	
2. Safety output channel 2 ON (green) when	Machine stopped/under-speed signal detected on Input Channel 2	No over-speed detected on Input Channel 2	

Operation and Requirements

The Module is redundant and self-checking. It requires digital input signals from two independent sensors (for example, proximity switches) to monitor for either under-speed or over-speed conditions.

The input channels are factory pre-adjusted for simultaneity, and a simultaneity potentiometer (behind the Module front cover) is available to further synchronize the input channel timing. Two banks of DIP switches are also located behind the front cover, for the purpose of selecting the switch point range; a second potentiometer is used to fine-tune the switch point setting. See "Configuration" on page 13.

© Banner Engineering Corp. All rights reserved.
www.bannerengineering.com

Functional Diagram

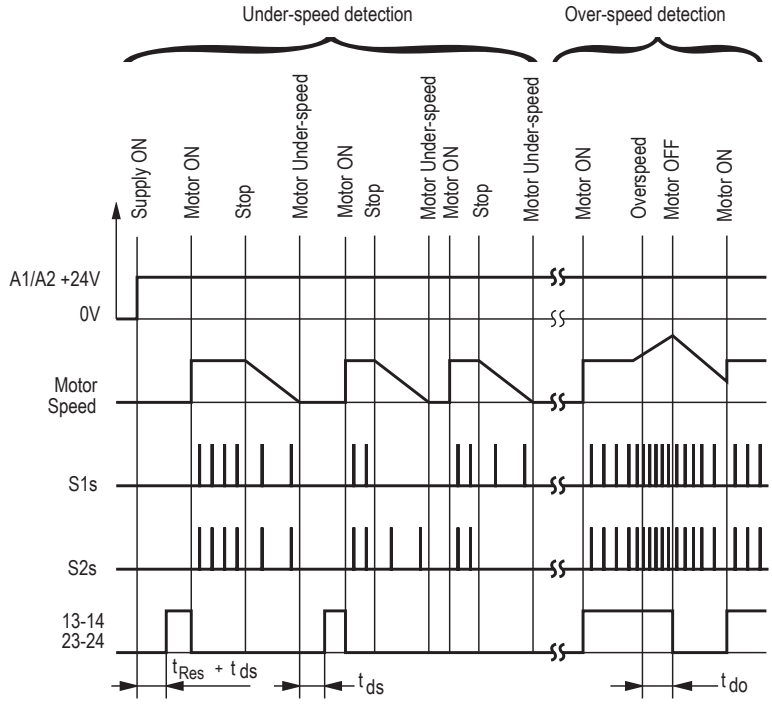

S1s: Output signal from sensor A
S2s: Output signal from sensor B
t_{Res}: Power-up delay
t_{ds}: Response after underspeed detection
t_{do}: Response after overspeed detection

Input Sensor Requirements. Both sensors must have 24 V PNP outputs. The Module continually monitors the power supply current to each sensor. The minimum acceptable sensor current is 3 mA (with the sensor PNP output in either the ON or OFF state). The Module will detect if any sensor power supply wire (S1+, S1-, S2+, S2-) is broken. A broken power supply wire always results in an OFF condition.

- If the safety outputs are closed (on) when a sensor wire breaks or is disconnected, the related internal relay turns off and the safety outputs open, signaling "No Under-speed" and/or "Over-speed."
- If the safety outputs are open (off) when a sensor wire breaks or is disconnected, they cannot close (again signaling "No Under-speed" and/or "Over-speed") until the sensor connection is fixed.

Sensor Mounting Requirements: For safe and reliable operation, the two input sensors must be mounted so that they are vibration-free, their signals are received simultaneously, and they don't influence each other.

© Banner Engineering Corp. All rights reserved.
www.bannerengineering.com

Chapter 3 Installation Instructions

Mechanical Installation

The SSM-FM-11Ax SSM Module must be installed inside an enclosure.

It is not designed for exposed wiring. It is the user's responsibility to house the SSM-FM-11Ax SSM Module in an enclosure with NEMA 3 (IEC IP54) rating, or better. The SSM-FM-11Ax SSM Module mounts directly to standard 35 mm DIN rail.

Heat Dissipation Considerations: For reliable operation, ensure that the operating specifications are not exceeded. The enclosure must provide adequate heat dissipation so that the air closely surrounding the SSM-FM-11Ax SSM Module does not exceed the maximum operating temperature stated in the Specifications. Methods to reduce heat build-up include venting, forced airflow (for example, exhaust fans), adequate enclosure exterior surface area, and spacing between modules and other heat sources.

Electrical Installation

It is not possible to give exact wiring instructions for a Safety Module that interfaces to a multitude of machine control configurations. The following guidelines are general in nature.

The Safety Module has no delay function. Its output relay contacts open within the time frame determined by the formula shown in the Configuration section. This classifies the Safety Module as functional stop "Category 0", as defined by NFPA 79 and IEC/EN 60204-1.

Input Sensor Connections

The Module provides 24 V DC and 0 V to power the sensors through S1+/S1- and S2+/S2-. The sensor output signals are connected to terminals S1s and S2s.

Periodic Checks

The safety function must be triggered during commissioning and, at least, once every 30 days (or at a frequency determined by a risk assessment).

Reset and Startup Conditions

The Module works only in automatic reset mode. In order for the Module to switch to RUN mode for normal operation, the Y1 - Y2 feedback input must be closed during power-up.

The Module typically requires two to three seconds after power On to evaluate the signals from the two sensors and to decide if the number of incoming signals/pulses is above or below the set switch point value. After three seconds, if the Module detects a number of pulses per minute below the set value, the relays energize and the N. O. safety output contacts close, indicating an under-speed condition. If the machine being monitored and the Module are powered up at the same time, the machine has only three seconds to come up to speed, or the Module detects an under-speed condition. If the machine requires more than three seconds, power up the machine first, then the Module, after the appropriate delay.

When each of the internal relays is energized, its corresponding LED turns On green. Both relay outputs activate only if both inputs reach the enabling conditions within approximately two seconds. If the signals are not received within two seconds, for example, because of a defective sensor or because the channels did not switch simultaneously, the output contacts will not close, and power to the Module must be cycled.

© Banner Engineering Corp. All rights reserved.

Typical wiring to two sensors

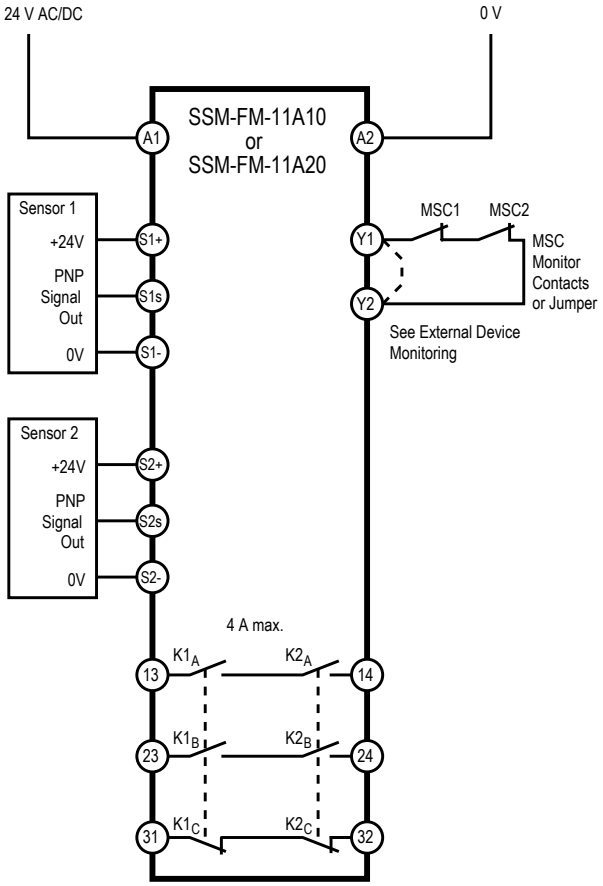

Suited up to SIL3, Performance Level e, Cat. 3

Typical wiring to one sensor

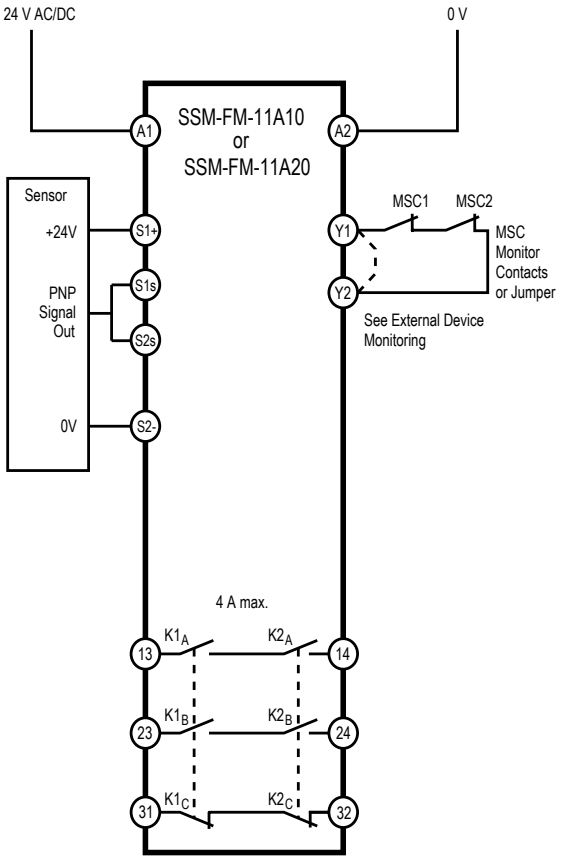

Suited up to SIL2, Performance Level c, Cat. 2 (to achieve CAT. 2 the safety function has to be tested on a regular basis)

Connection to the Machine to be Controlled

The machine wiring diagram shows a generic connection of the Safety Module's redundant output circuits to the Machine Primary Control Elements MPCE1 and MPCE2. A Machine Primary Control Element is an electrically powered device, external to the Interface Module, which stops the machinery being controlled by immediately removing electrical power from the machine and (when necessary) by applying braking to dangerous motion.

© Banner Engineering Corp. All rights reserved.
www.bannerengineering.com

Machine connection with an interlocked guard with guard locking and another safety module

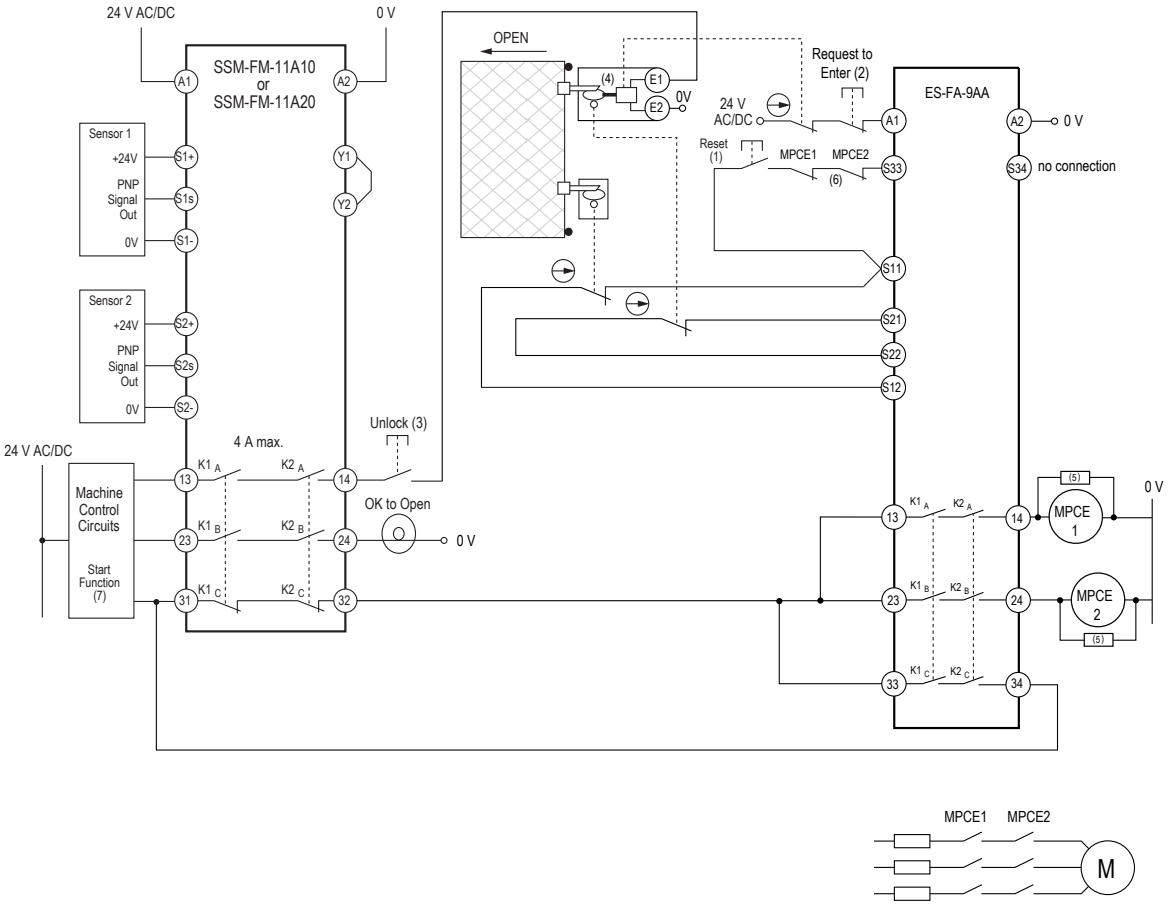

Standard connection, suited up to SIL3, Performance Level e, Cat. 3

1. Safety Module ES-FA-9AA is configured for manual reset. See data sheet p/n 60606 for complete information. Other Safety Modules can be used. Call Banner Engineering with all questions.
2. After the guard has been closed, the Safety Module has been reset, and the machine control has started the motor, the Request to Enter button can be pushed to interrupt the cycle.
3. The machine control and the SSM Safe-Speed Monitoring Module enable the Unlock button and illuminate the OK to Open light.
4. The signal from the Unlock button energizes the solenoid locking mechanism of the locking style safety switch, allowing the guard to be opened. It is recommended to locate the Unlock button near the associated guard. The solenoid contact prevents the reset of the ES-FA-9AA Safety Module until the guard is locked.
5. Arc Suppressor, see Warning, "Properly install arc or transient suppressors".
6. See the External Device Monitoring section and the Warning, "Interfacing MPCEs".
7. Not all feedback or monitoring functions of the machine interface are shown.

WARNING:

- **Interfacing MPCEs**
- Failure to follow these instructions could result in serious injury or death.
- Do not wire any intermediate device(s) (PLC, PES, PC), between the Safety Module outputs and the Machine Primary Control Elements (MPCE1 to MPCE3) it switches in such a manner that in the event of a failure there is the loss of the safety stop command, OR in such a manner that the safety function can be suspended, overridden, or defeated, unless accomplished with the same or greater degree of safety.
- Whenever forced-guided, mechanically linked relays are added as intermediate switching devices, a normally closed forced-guided monitor contact from each relay must be added to the series feedback loop between Interface Module terminals Y1 and Y2.

© Banner Engineering Corp. All rights reserved.
www.bannerengineering.com

WARNING:

- **Properly install arc or transient suppressors**
- Failure to follow these instructions could result in serious injury or death.
- Install any suppressors as shown across the coils of the machine primary control elements. Do not install suppressors directly across the output contacts of the safety or interface module. In such a configuration, it is possible for suppressors to fail as a short circuit.

WARNING:

- **Risk of electric shock**
- Use extreme caution to avoid electrical shock. Serious injury or death could result.
- Always disconnect power from the safety system (for example, device, module, interfacing, etc.), guarded machine, and/or the machine being controlled before making any connections or replacing any component. Lockout/tagout procedures might be required. Refer to OSHA 29CFR1910.147, ANSI Z244-1, or the applicable standard for controlling hazardous energy.
- Make no more connections to the device or system than are described in this manual. Electrical installation and wiring must be made by a Qualified Person[3] and must comply with the applicable electrical standards and wiring codes, such as the NEC (National Electrical Code), NFPA 79, or IEC 60204-1, and all applicable local standards and codes.

External Device Monitoring

To satisfy the requirements of Control Reliability (OSHA and ANSI), Category 3 and 4 of ISO 13849-1, the Machine Primary Control Elements (MPCEs) must each offer a normally closed, forced-guided (mechanically linked) monitor contact. Connect one normally closed monitor contact from each Machine Primary Control Element as shown in the appropriate hookup drawing.

In operation, if one of the switching contacts of either MPCE fails in the energized condition, the associated monitor contact will remain open. Therefore, it will not be possible to reset the Primary Safety Device. If no MPCE-monitor contacts are monitored, it is the user's responsibility to ensure that any single failure will not result in a hazardous condition and will prevent a successive machine cycle.

Overvoltage Category II and III Installations (EN 50178 and IEC 60664-1)

The Safety Module is rated for Overvoltage Category III when voltages of 1 V to 150 V AC/DC are applied to the output relay contacts. It is rated for Overvoltage Category II when voltages of 151 V to 250 V AC/DC are applied to the output relay contacts and no additional precautions are taken to attenuate possible overvoltage situations in the supply voltage. The Module can be used in an Overvoltage Category III environment (with voltages of 151 V to 250 V AC/DC) if care is taken either to reduce the level of electrical disturbances seen by the Module to Overvoltage Category II levels by installing surge suppressor devices (for example, arc suppressors), or to install extra external insulation in order to isolate both the Safety Module and the user from the higher voltage levels of a Category III environment.

For Overvoltage Category III installations with output contact voltage 151 V to 250 V AC/DC applied to the output contact(s): the Safety Module may be used under the conditions of a higher overvoltage category where appropriate overvoltage reduction is provided. Appropriate methods include:

- An overvoltage protective device
- A transformer with isolated windings
- A distribution system with a multiplicity of branch circuits (capable of diverting energy of surges)
- A capacitance capable of absorbing energy of surges
- A resistance or similar damping device capable of dissipating the energy of surges

When switching inductive AC loads, it is good practice to install appropriately-sized arc suppressors to protect the Safety Module outputs. However, if arc suppressors are used, they must be installed across the load being switched (for example, across the coils of external safety relays), and never across the Safety Module's output contacts (see Warning, "Properly install arc or transient suppressors").

Auxiliary Monitor Contact

The action of the auxiliary monitor contact, terminals 31-32, inversely "follows" the action of the safety outputs. The 31-32 auxiliary monitor contact is to be used only for control functions that are NOT safety-related. A typical use is to communicate the status of the Safety Module output to a programmable logic controller (PLC).

---

[3] A person who, by possession of a recognized degree or certificate of professional training, or who, by extensive knowledge, training and experience, has successfully demonstrated the ability to solve problems relating to the subject matter and work.

© Banner Engineering Corp. All rights reserved.

Chapter 4 Configuration

Removing the front cover

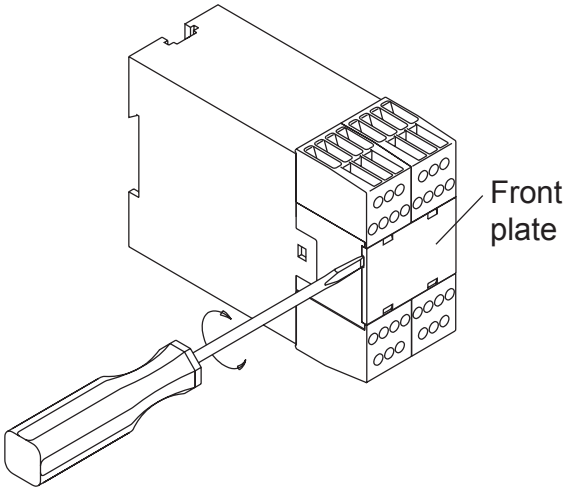

Module adjustments

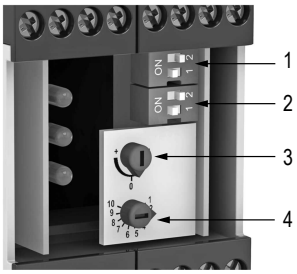

1. DIP switch bank A
2. DIP switch bank B
3. Simultaneity adjustment potentiometer
4. Fine-tune potentiometer

Use DIP switch banks A and B together to set the ranges. For example, to select the first range setting, set DIP switch 1 in bank A and in bank B to OFF, set DIP switch 2 in bank A and bank B to OFF.

Range Settings		DIP Switch Banks A and B	
Model SSM-…10	Model SSM-…20	1	2
5–40 ipm	10–80 ipm	OFF	OFF
1,200–10,500	2,400–20,000	OFF	ON
300–2,700	600–5,300	ON	OFF
35–340 ipm	80–650 ipm	ON	ON

Adjusting the Switch Point Value

The Module's four impulse-per-minute (ipm) ranges are selected via redundant pairs of DIP switches, as shown in the table. To access the DIP switches, insert a small flat-blade screwdriver in the slot behind the Module's front panel, and pry the front panel off.

To adjust the switch point to any value, first select the range via the DIP switches. Then select the value within that range via the fine-tuning potentiometer, using either of two methods.

© Banner Engineering Corp. All rights reserved.
www.bannerengineering.com

NOTE: Operate the DIP switches when power is disconnected from the device.

Approximate Method

The mechanical range of the potentiometer is 270°. Because the potentiometer is linear, set the approximate values as in the following example:

- Desired switching point: 1,400 ipm
- Selected range: 300 to 2,700 ipm
- Potentiometer range delta: 2,700 ipm minus 300 ipm = 2,400 ipm

With the potentiometer dial all the way to the left (counterclockwise), the switch point is at 300 ipm. To increase the setting to 1,400 ipm, 1,100 ipm (1,400 minus 300 = 1,100 ipm) must be added:

[270 degrees ÷ 2,400 ipm (total range)] x 1,100 ipm = 123.75 degrees

Starting from the left, turn the potentiometer dial 123.75° clockwise. The middle position of the potentiometer is 135° (or 1,200 ipm), so the setting is just a few degrees right from the middle position. This method provides only an approximate value.

More Precise Method

Measure the motor speed, including the speeds to be detected as over-speed and under-speed, using an rpm meter.

Adjusting Simultaneity

The SSM-FM-11A's input channels are factory pre-adjusted; use the simultaneity potentiometer (behind the Module's front cover) to further synchronize the input channel timing.

1. Start the motor.

   The safety output contacts should open and indicators should turn off, as soon as the motor speed passes the switch point.

2. Stop the motor.

   After the motor speed drops below the switch point value and after the selected delay time, the safety output contacts should close and indicators should turn on.

3. If only one of the two channels detects the under-speed condition, restart the motor and turn the simultaneity potentiometer a few degrees clockwise (or counterclockwise, depending on which of the two channels switched first) to adjust the simultaneity. Repeat this procedure until both channels detect the under-speed condition and turn OFF both internal relays simultaneously.

© Banner Engineering Corp. All rights reserved.

Linear or Rotational Movement

The Module can monitor either linear or rotational motion because it looks only for pulses on its two inputs.

Linear Motion Applications (Monitoring the Speed of a Conveyor)

Linear Motion Detection

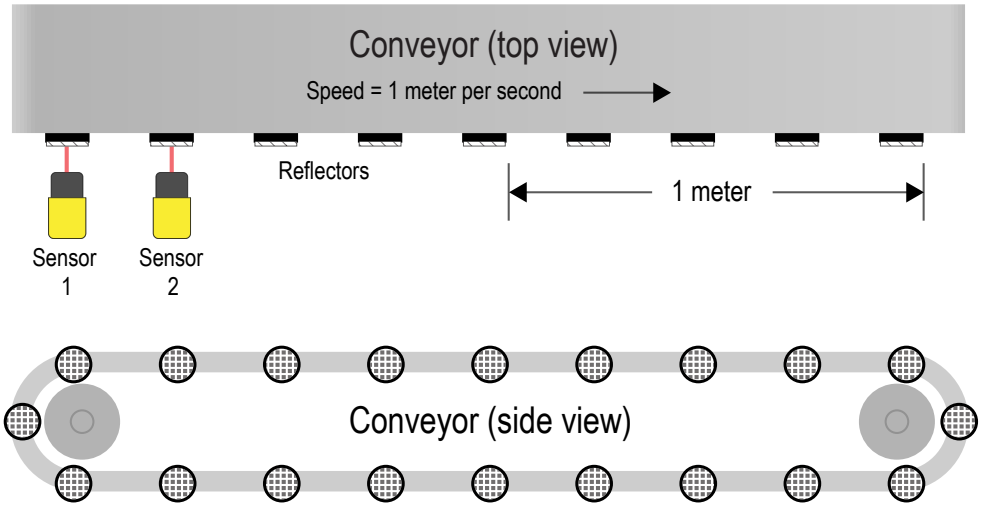

Module should monitor conveyor for max. speed of 1 meter/second.

Sensing points per meter = pulses per meter: 1 per 0.25 meter = 4 per meter

Max. speed: 1 meter/second = 60 meters/minute

Number of pulses per minute at a speed in meters per minute: sensing points/meter × meters/minute

For this example, the number of pulses = 4 pulses/meter × 60 meters/minute = 240 pulses/minute.

To detect a speed greater than 1 meter/second, the switching point must be set slightly higher than 240 ipm; for 4 sensing points: 4 pulses per meter.

Rotational Motion Applications

Depending on the number of sensing points at the motor, the ipm (impulses per minute) can be a multiple of the motor rpm. Use the following formula to calculate the number of impulses per minute the Module will see from the two sensor outputs: rpm x number of sensing points per sensor = ipm

If each sensor sees one sensing point per motor turn, then rpm = ipm:

- At 1000 rpm with 1 sensing point per turn per sensor: 1000 x 1 = 1000 ipm
- At 1000 rpm with 2 sensing points per turn per sensor: 1000 x 2 = 2000 ipm

Because more sensing points per sensor are interpreted by the Module as a higher rpm, the more sensing points used, the closer the switch point can be set to 0 rpm.

NOTE: Both sensors must always sense their sensing points at the exact same time, so that the two Module inputs receive the pulses at the same time. If two sensing points are used per sensor, they must be offset by 180°. If four sensing points are used, they must be offset by 90° of each other (see the following figures).

© Banner Engineering Corp. All rights reserved.
www.bannerengineering.com

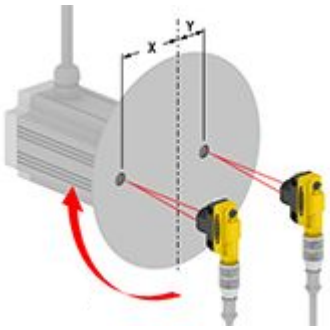	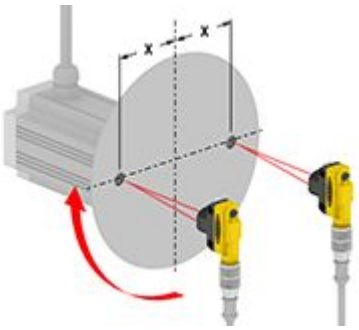	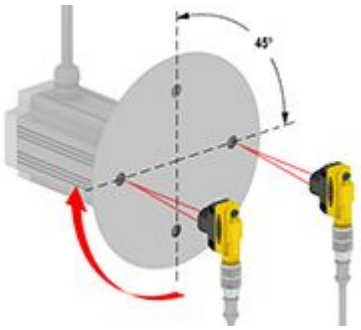
Two sensing points at different distances from the center of the disk. Each sensor sends **one** pulse per revolution to the Module (500 rpm = 500 ipm).	Two sensing points at the same distance from the center of the disk. Each sensor sends **two** pulses per revolution to the Module (500 rpm = 500 x 2 = 1,000 ipm).	Four sensing points at the same distance from the center of the disk. Each sensor sends **four** pulses per revolution to the Module (500 rpm = 500 x 4 = 2,000 ipm).

Under-Speed Monitoring Applications

Because the pulses that define the detected speed are created by sensors that monitor the moving or rotating part (work piece or tool), speed sensing is independent of the supply voltage of the monitored motor.

The two input channels are factory-adjusted for reliable switching simultaneity of the sensor inputs. A channel fine-tuning potentiometer inside the Module housing (behind the front cover) provides exact simultaneity.

Under-speed timing

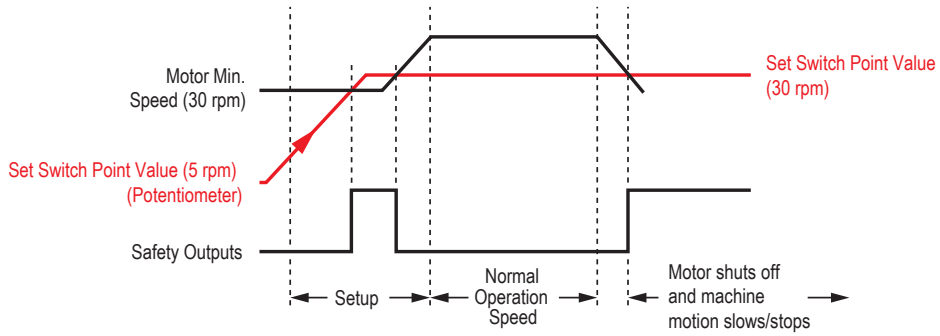

Delay Time

A delay time occurs between the detection of the under-speed condition and the closing of the safety output contacts; this delay time is based on the Module's adjusted ipm (input pulses per minute) set value.

Calculate the delay time as follows: (60 seconds ÷ adjusted ipm value) + minimum response time of 2.5 seconds = output contact close delay (in seconds) after the under-speed detection.

Example: ipm = 15

(60 seconds ÷ 15) + minimum response time of 2.5 seconds = 6.5 seconds

In this example, the safety output contacts closes 6.5 seconds after the under-speed condition is detected. In under-speed monitoring applications, the safety output contacts are open when the motor speed is above the under-speed switch point setting. When the speed drops below that value, the output contacts close.

Configuring for Under-Speed Detection

Under-speed detection is detecting a low speed anywhere within the set range of the Module. For this example, we are using 500 ipm.

1. Turn off the power to the Module.
2. Using a small flat-blade screwdriver, pry open the Module's front plate.

© Banner Engineering Corp. All rights reserved.
www.bannerengineering.com

3. Using the four DIP switches, select a switching range of 300-2,700 or 80-650, depending on the model.
4. Turn the fine-tune potentiometer counterclockwise to the 1 setting.
5. Set the simultaneity potentiometer to the middle position (0).
6. If sensors are not yet installed, install them now so that they can detect the rotation of the motor.
7. Connect the sensors to the Module.
8. Disconnect the wires from the Module safety output contacts 13-14 and 23-24.
9. Connect power to the Module; the motor should still be off.

   The Module's Power LED must come ON immediately. The safety output contacts (13-14 and 23-24) should close and the indicators should come on after no more than a 3-second time delay, indicating an under-speed condition.
10. Start the motor and run it at the speed you want to detect as under-speed (for this example, 500 ipm).
11. The normally open safety output contacts must open and the indicators must turn off.
12. Slowly turn the fine-tuning potentiometer clockwise (1 or 2 degrees at a time), pausing to allow the Module its necessary response time to detect under-speed. Continue to turn clockwise until both normally open safety output contacts (13-14 and 23-24) close and the indicators turn on.
13. Increase the motor speed again to normal operating speed.

    Both safety output contacts must open and the indicators must turn off.
14. To test for the correct setting, slow the motor down below the set value (or turn the motor off).

    Both safety output contacts must close and the indicators must turn on again.
15. Wire the safety output contacts into your machine control circuit and verify that the system works according to the requirements.

Use the simultaneity potentiometer to adjust simultaneity between the two input channels if only one of them detects the under-speed signal from its assigned sensor.

Configuring for Zero Speed Detection

Zero speed detection is detecting fewer than 5 or 10 pulses per minute, depending on the model. The module can detect that the system is barely moving, but not truly at zero-speed (standstill).

These directions illustrate only one configuration method, which may be not as accurate as using an rpm meter or an oscilloscope to set the switching frequency to a precise value. This example should set the switch point very close to the under-speed setting.

1. Turn off the power to the Module and the machine.
2. Pry open the Module's front plate with a small flat-blade screwdriver.
3. Select the range with the slowest ipm values using the DIP switches (5-40 ipm range for model SSM-FM-11A10 and 10-80 ipm range for model SSM-FM-11A20).
4. Set the simultaneity potentiometer to the middle position (0).
5. Use the fine-tuning potentiometer to set the switch point to the lowest possible value (fully counter-clockwise, to the 1 setting).
6. If the sensors are not yet installed, install them now so that they can detect the rotation of the motor.
7. Connect the sensor outputs to the Module.
8. Disconnect the wires from the Module safety output contacts 13-14 and 23-24.
9. Connect power to the Module; the Motor should still be off.

   The Module Power LED must come on immediately. The safety output contacts (13-14 and 23-24) should close and the indicators should come on after no more than a 3-second time delay.
10. Start the motor.

    The safety output contacts should open and the indicators should turn off, as soon as the motor speed passes the switch point for under-speed detection.
11. Stop the motor.

    After the motor speed drops below the minimum switch point value (less than 5 ipm or 10 ipm, depending on model) and after the selected delay time, the normally open safety output contacts should close and the indicators should turn on.

© Banner Engineering Corp. All rights reserved.

12. If the motor speed does not drop below the minimum switch point value, or if only one of the two channels detects a standstill condition, restart the motor, and increase the switch point for standstill slightly, by turning the fine-tune potentiometer a few degrees clockwise. Repeat this procedure until both channels detect standstill and turn off both internal relays simultaneously.
13. Connect safety outputs 13-14 and 23-24 to the monitoring circuit and verify that the system works according to the requirements.

Over-speed Monitoring Applications

For over-speed monitoring applications, the sensor configuration is similar to under-speed monitoring applications, except for the setting of the switch point value. The safety output contacts are closed when the motor speed is below the set under-speed switch point value; the safety output contacts open when the motor speed exceeds the set over-speed value.

Over-speed timing

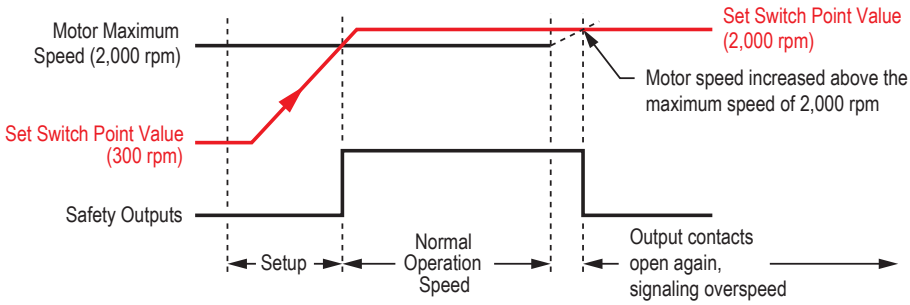

For over-speed monitoring, it is important to adjust the two input channels so they switch simultaneously. If one of the channels detects the over-speed signal first, its internal relays will drop out and open the safety output contacts, dropping the motor speed immediately; the second input's internal relay would then remain ON, preventing the Module and the motor from restarting. (To restart in this situation, cycle power to the Module.) The input channels are factory pre-adjusted, use the simultaneity potentiometer (behind the Module front cover) to further synchronize the input channel timing.

The switch point has some hysteresis, so turn the potentiometer back a degree or so, but not to the point where the safety output indicators turn off again. This is now your switch point to detect motor speeds above 2,000 rpm.

Configuring for Over-Speed Detection

Over-speed detection is detecting a high speed anywhere within the set range of the Module. For this example, we are using 2,000 ipm.

1. Turn off the power to the Module and the motor.
2. Using a small flat-blade screwdriver, pry open the Module's front plate.
3. Using the DIP switches, select switching range 300-2,700 ipm or 600-5,300 ipm, depending on model.
4. Turn the fine-tune potentiometer clockwise to 10.
5. Set the simultaneity potentiometer to the middle position (0).
6. If the sensors are not yet installed, install them so that they can detect the rotation of the motor.
7. Connect the sensors to the Module.
8. Disconnect the wires from the Module safety output contacts 13-14 and 23-24.
9. Connect power to the Module; the Motor should still be off.

   The Module's Power LED must come on immediately. The safety output contacts (13-14 and 23-24) should close and indicators should come on after no more than a 3-second time delay, indicating an under-speed condition.
10. Start the motor and run it at the speed you want to detect as over-speed (for this example, 2,000 rpm).
11. Slowly turn the fine-tuning potentiometer counterclockwise until both normally open safety output contacts (13-14 and 23-24) open and the indicators turn off. (If necessary, fine-tune the channel simultaneity using the fine-tune potentiometer). This is your switch point.
12. Reduce the motor speed to normal operating speed.

    Both safety output contacts must close and the indicators must turn back on.
13. Verify the proper setting by increasing the motor speed again above the set value.

© Banner Engineering Corp. All rights reserved.
www.bannerengineering.com

The safety output contacts must open.

14. Wire the safety output contacts into your motor control circuit.

© Banner Engineering Corp. All rights reserved.

Chapter 5 Checkout Procedure

CAUTION:

- **Disconnect power prior to checkout**
- Dangerous voltages might be present along the module wiring barriers whenever power to the machine control elements is on.
- Before performing the initial checkout procedure, disconnect all power from the machine to be controlled. Exercise extreme caution whenever machine control power is or might be present. Always disconnect power to the machine control elements before opening the enclosure housing of the module.

Verify the functioning of the Safety Module and the device(s) connected to it at initial installation and on a regular periodic basis to ensure proper operation (see also the machine manufacturer's recommendations).

1. Remove power from the machine primary control elements (MPCEs) and ensure the machine is in a stop (no motion) condition.
2. Apply power to the Safety Module at terminals A1 and A2 (see hookup figures).
3. Verify that the Input Power indicator, and the input channel 1 (K1) and input channel 2 (K2) indicators turn ON. This can take up to 20 seconds. (This means that the N.O. contacts 13-14 and 23-24 are closed and the N.C. 31-32 is open.) If not, disconnect the input power and check all wiring. Do not proceed until the cause of the problem is corrected.
4. Simulate motion without exposing any individual(s) to hazards. For example, run the motor with the clutch disengaged while monitoring the drive shaft or gearing.
5. Verify that the input channel 1 (K1) and input channel 2 (K2) indicators turn OFF as expected (contacts 13-14 and 23-24 open, and contacts 31-32 close). If the Safety Module does not operate (indicate) as expected, disconnect the input power and check all wiring. After correcting the problem, return to step 2.
6. Close and secure the enclosure in which the Safety Module is mounted. Apply power to the machine primary control elements and perform the Periodic Checkout Procedure.

© Banner Engineering Corp. All rights reserved.
www.bannerengineering.com

Chapter 6 Product Support and Maintenance

EU/UK Declaration of Conformity (DoC)

Banner Engineering Corp. herewith declares that these products are in conformity with the provisions of the listed directives and all essential health and safety requirements have been met. For the complete DoC, please go to www.bannerengineering.com.

Product	Directive
SSM-FM-11A10 and SSM-FM-11A20 Safe Speed Monitoring Module	EU: Machinery Directive 2006/42/EC
	UKCA: Machinery (Safety) Regulations 2008

Representative in EU: Spiros Lachandidis, Managing Director, Banner Engineering BV | Park Lane | Culliganlaan 2F bus 3 | 1831 Diegem, BELGIUM

Representative in UK: Tony Coghlan, Managing Director, Turck Banner LTD | Blenheim House | Blenheim Court | Wickford, Essex SS11 8YT | Great Britain

Repairs

Contact Banner Engineering for troubleshooting of this device. **Do not attempt any repairs to this Banner device; it contains no field-replaceable parts or components.** If the device, device part, or device component is determined to be defective by a Banner Applications Engineer, they will advise you of Banner's RMA (Return Merchandise Authorization) procedure.

> **IMPORTANT:** If instructed to return the device, pack it with care. Damage that occurs in return shipping is not covered by warranty.

Banner Engineering Corp Limited Warranty

Banner Engineering Corp. warrants its products to be free from defects in material and workmanship for one year following the date of shipment. Banner Engineering Corp. will repair or replace, free of charge, any product of its manufacture which, at the time it is returned to the factory, is found to have been defective during the warranty period. This warranty does not cover damage or liability for misuse, abuse, or the improper application or installation of the Banner product.

THIS LIMITED WARRANTY IS EXCLUSIVE AND IN LIEU OF ALL OTHER WARRANTIES WHETHER EXPRESS OR IMPLIED (INCLUDING, WITHOUT LIMITATION, ANY WARRANTY OF MERCHANTABILITY OR FITNESS FOR A PARTICULAR PURPOSE), AND WHETHER ARISING UNDER COURSE OF PERFORMANCE, COURSE OF DEALING OR TRADE USAGE.

This Warranty is exclusive and limited to repair or, at the discretion of Banner Engineering Corp., replacement. **IN NO EVENT SHALL BANNER ENGINEERING CORP. BE LIABLE TO BUYER OR ANY OTHER PERSON OR ENTITY FOR ANY EXTRA COSTS, EXPENSES, LOSSES, LOSS OF PROFITS, OR ANY INCIDENTAL, CONSEQUENTIAL OR SPECIAL DAMAGES RESULTING FROM ANY PRODUCT DEFECT OR FROM THE USE OR INABILITY TO USE THE PRODUCT, WHETHER ARISING IN CONTRACT OR WARRANTY, STATUTE, TORT, STRICT LIABILITY, NEGLIGENCE, OR OTHERWISE.**

Banner Engineering Corp. reserves the right to change, modify or improve the design of the product without assuming any obligations or liabilities relating to any product previously manufactured by Banner Engineering Corp. Any misuse, abuse, or improper application or installation of this product or use of the product for personal protection applications when the product is identified as not intended for such purposes will void the product warranty. Any modifications to this product without prior express approval by Banner Engineering Corp will void the product warranties. All specifications published in this document are subject to change; Banner reserves the right to modify product specifications or update documentation at any time. Specifications and product information in English supersede that which is provided in any other language. For the most recent version of any documentation, refer to: www.bannerengineering.com.

For patent information, see www.bannerengineering.com/patents.

© Banner Engineering Corp. All rights reserved.
www.bannerengineering.com

LinkedIn

X

Facebook

Instagram



© 2026. All rights reserved.