MULTI-BEAM 2-Wire AC Power Block Modules

Datasheet

MULTI-BEAM 2-wire ac power block for MULTI-BEAM 2-wire modular photoelectric sensors



Figure 1. Model 2PBB

MULTI-BEAM 2-wire power block models 2PBA, 2PBB, and 2PBD contain a low voltage power supply that uses a unique circuit to take a very small leakage current through the load and convert it to the dc power required to run the scanner block and logic module.

These power blocks also contain a solid-state switch that operates the load, and a transient suppression circuit to prevent false operation from high voltage spikes on the incoming line.

These power blocks are completely solid-state for unlimited operating life. Model 2PBR is a 4-wire power block that works with 2-wire scanner blocks and logic modules and offers an SPST "hard" contact for switching heavy ac or dc loads.

NOTE: MULTI-BEAM 2-wire AC power blocks are color-coded black.

Models	Operating Voltage	Outputs	Specifications	Certifications
2PBA	105 to 130 V ac; 50/60 Hz	SPST solid-state switch, 3/4 amp maximum (derated to 1/2 amp at 70 °C). 10 amps maximum inrush for 1 second (non-repeating).	On-State Voltage Drop: Less than 10 V Leakage Current: Less than 1 mA (resistive or inductive loads)	UL LISTED, CSA
2PBB	210 to 250 V ac; 50/60 Hz			
2PBD	22 to 28 V ac; 50/60 Hz			N/A
2PBR	105 to 130 V ac; 50/60 Hz	SPST electromechanical relay contact.	Contact Rating: 250 V ac max, 30 V dc max, 5 amps max (resistive load); install MOV across contact if switching an ac inductive load. Closure time: 20 ms Release time: 20 ms Maximum Switching Speed: 20 operations/ second Mechanical Life: 10,000,000 operations	N/A

Wiring Diagrams

2PBA, 2PBB, and 2PBD Power Blocks

MULTI-BEAM 2-wire power blocks offer the ultimate in simplicity of sensor wiring. They wire directly in series with an ac load, exactly like a limit switch. Response time of 2-wire power blocks is determined by the scanner block, whose response time is 10 ms on/off. A built-in false pulse protection circuit holds the output OFF for 10 ms after power is initially applied to the power block. MULTI-BEAM 2-wire power blocks will operate from –40 to 70 °C (–40 to 158 °F). Resistive loads must be less than 15,000 ohms and inductive loads must be greater than 1.2 watts (10 mA).

NOTE: Output has a maximum load capacity of 3/4 A, a maximum resistive load of 15 kOhms, and a minimum inductive load of 1.2 watts (10 mA).

Original Document
03508 Rev. A

14 March 2014

03508

ПРОМЭЛЕКТРОНИКА/ sales@prom-elec.com

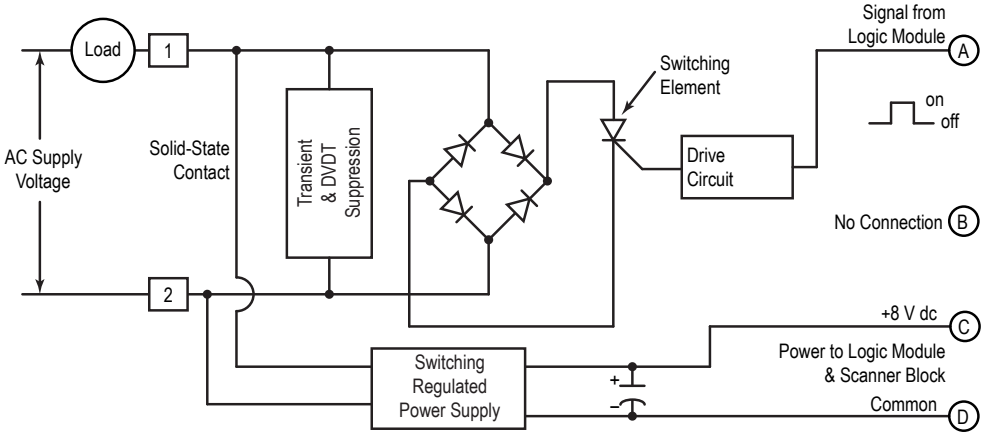

Figure 2. Functional Schematics

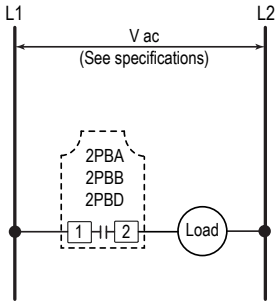

Figure 3. Basic Wiring of 2-Wire MULTI-BEAM

MULTI-BEAM 2-wire sensors wire in series with an appropriate load. This combination, in turn, wires directly across the ac line. A 2-wire sensor may be connected exactly like a mechanical limit switch.

The MULTI-BEAM remains powered when the load is "off" by a residual current that flows through the load. This off-state leakage current is always less than 1 mA. The effect of this leakage current depends upon the characteristics of the load. The voltage that appears across the load in the off-state is equal to the leakage current of the sensor multiplied by the resistance of the load: $V_{off} = 1\ mA \times R_{load}$.

If this resultant off-state voltage is less than the guaranteed turn-off voltage of the load, the interface is direct. If the off-state voltage causes the load to stay "on," connect an artificial load resistor in parallel with the load to lower its effective resistance. Most loads, including most programmable logic controller (PLC) inputs, will interface to 2-wire sensors with 1 mA leakage current without needing an artificial load resistor. There is no polarity requirement. Either wire may connect to terminal #1 and the other to terminal #2.

CAUTION: All three components of a MULTI-BEAM 2-wire sensor will be destroyed if the load becomes a short circuit.

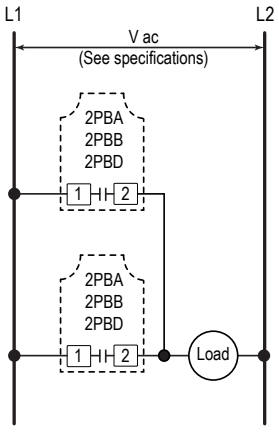

Figure 4. 2-Wire MULTI-BEAMs in Parallel

Multiple 2-wire MULTI-BEAMs may be wired together in parallel to a load for OR or NAND logic functions. When sensors are wired in parallel, the off-state leakage current through the load is equal to the sum of the leakage currents of the individual sensors. Consequently, loads with high resistance, like small relays and electronic circuits, may require artificial load resistors.

Two-wire MULTI-BEAM sensors have a 100 ms power-up delay for protection against false outputs. When 2-wire MULTI-BEAMs are wired together in parallel, any power block with an energized output robs all the other power blocks of the current they need to operate. When the energized output drops, there will be a 0.1 second delay before any other MULTI-BEAM can energize. As a result, the load may momentarily drop out.

Two-wire MULTI-BEAM sensors cannot wire in series with other 2-wire sensors unless power block model 2PBR is used. If series connection of 2-wire ac sensors is required, consider models within the VALU-BEAM or MINI-BEAM families.

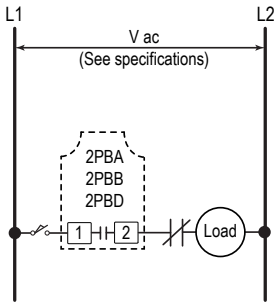

Figure 5. 2-Wire MULTI-BEAM with Series Contacts

When 2-wire MULTI-BEAM sensors are connector in series with mechanical switch or relay contacts, the sensor receives power to operate only when all the contacts are closed. The false-pulse protection circuit of the MULTI-BEAM causes a 0.1 second delay between the time that the last contact closes and the time that the load energizes.

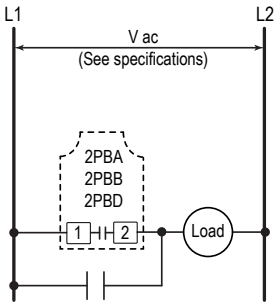

Figure 6. 2-Wire MULTI-BEAM with Parallel Contacts

Two-wire MULTI-BEAM sensors may be wired in parallel with mechanical switch or relay contacts. The load energizes when any of the contacts close or the sensor output is energized. When a contact is closed, it shunts the operating current away from the MULTI-BEAM. As a result, when all the contacts are open, the MULTI-BEAM's 0.1 second power-up delay may cause a momentary drop-out of the load.

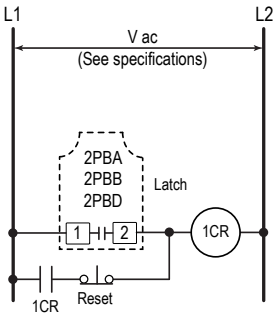

Figure 7. Photoelectric Latch with Manual Reset

The 1CR relay will latch "on" whenever the 2-wire MULTI-BEAM output is energized. The 1CR is reset when the normally-closed button switch is pressed.

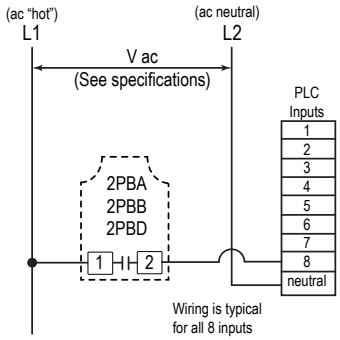

Figure 8. 2-Wire MULTI-BEAM to Programmable Logic Controller (PLC)

MULTI-BEAM 2-wire sensors operate with very low (1 mA) off-state leakage current. As a result, they will interface directly to most PLCs without needing an artificial load resistor. If the off-state voltage (1 mA × the input resistance of the PLC) is higher than the PLC sensing threshold, install a 10 kOhm to 15 kOhm, 5-watt resistor for each 2-wire sensor. The resistor connects between the input terminal and ac neutral.

If you have a question about wiring a specific brand of PLC, contact the Banner Applications Department during normal business hours.

2PBR Power Blocks

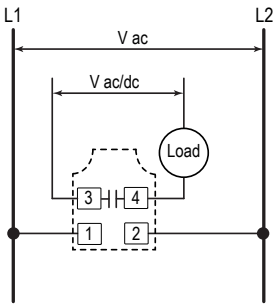

Figure 9. Connections

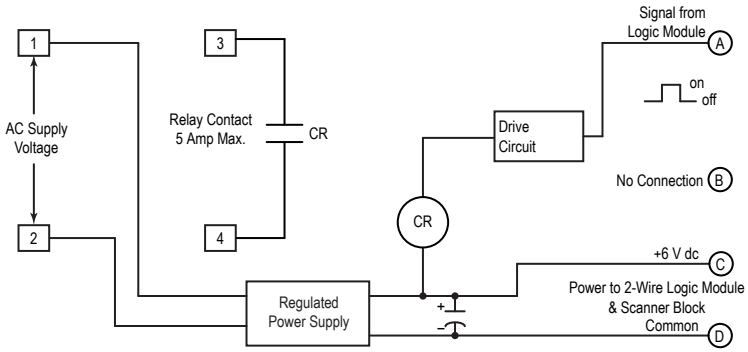

Figure 10. Functional Schematics

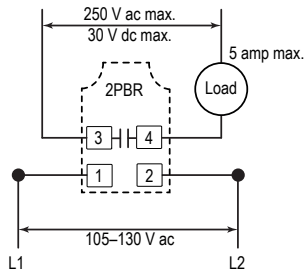

Figure 11. Wiring for 2PBR Power Block

Model 2PBR requires a 4-wire hookup, even though it only works with 2-wire scanner blocks and logic modules. It is powered by 120 V ac across terminals 1 and 2, and offers an SPST "hard" relay contact between terminals 3 and 4. This configuration allows a MULTI-BEAM sensor to directly interface large loads that draw more than 3/4 amps, like clutches, brakes, large contactors, and small motors.

The 2PBR also eliminates the problem of voltage drop from series strings of sensors operating low voltage ac loads.

Install an appropriate value metal oxide varistor (MOV) transient suppressor across power block terminals 3 and 4 when switching an ac inductive device.

Banner Engineering Corp Limited Warranty

Banner Engineering Corp. warrants its products to be free from defects in material and workmanship for one year following the date of shipment. Banner Engineering Corp. will repair or replace, free of charge, any product of its manufacture which, at the time it is returned to the factory, is found to have been defective during the warranty period. This warranty does not cover damage or liability for misuse, abuse, or the improper application or installation of the Banner product.

THIS LIMITED WARRANTY IS EXCLUSIVE AND IN LIEU OF ALL OTHER WARRANTIES WHETHER EXPRESS OR IMPLIED (INCLUDING, WITHOUT LIMITATION, ANY WARRANTY OF MERCHANTABILITY OR FITNESS FOR A PARTICULAR PURPOSE), AND WHETHER ARISING UNDER COURSE OF PERFORMANCE, COURSE OF DEALING OR TRADE USAGE.

This Warranty is exclusive and limited to repair or, at the discretion of Banner Engineering Corp., replacement. IN NO EVENT SHALL BANNER ENGINEERING CORP. BE LIABLE TO BUYER OR ANY OTHER PERSON OR ENTITY FOR ANY EXTRA COSTS, EXPENSES, LOSSES, LOSS OF PROFITS, OR ANY INCIDENTAL, CONSEQUENTIAL OR SPECIAL DAMAGES RESULTING FROM ANY PRODUCT DEFECT OR FROM THE USE OR INABILITY TO USE THE PRODUCT, WHETHER ARISING IN CONTRACT OR WARRANTY, STATUTE, TORT, STRICT LIABILITY, NEGLIGENCE, OR OTHERWISE.

Banner Engineering Corp. reserves the right to change, modify or improve the design of the product without assuming any obligations or liabilities relating to any product previously manufactured by Banner Engineering Corp.