MODEL NO.	"L"	"FL"	P/N
PBF630U	360 [9144]	.67 [17]	73810
PBF615U	180 [4572]	.67 [17]	51843
PBF66U	79 [2000]	.67 [17]	39981

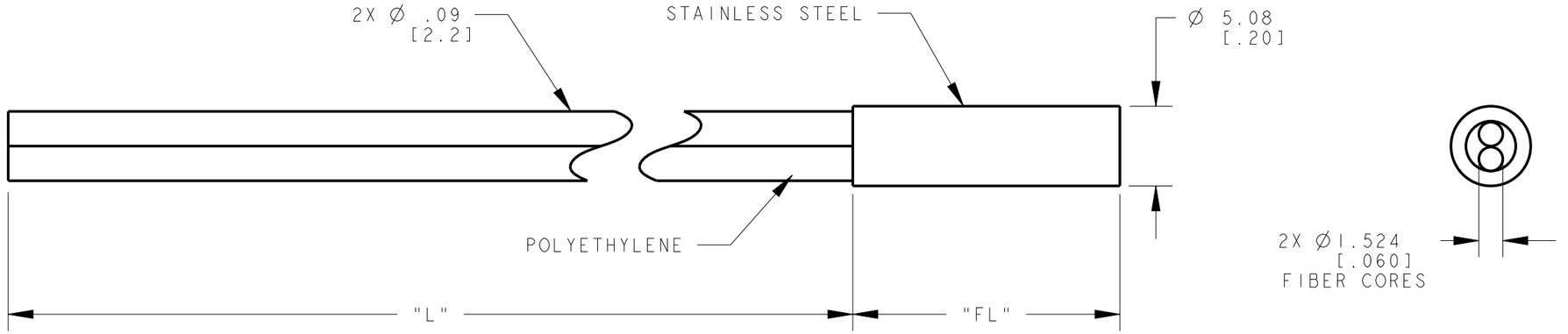

NOTES:
1. ALL DIMENSIONS ARE MILLIMETERS [INCHES] UNLESS OTHERWISE NOTED.
2. REFER TO "www.bannerengineering.com" FOR ADDITIONAL DATA AND SPECIFICATIONS.

This drawing is the property of BANNER ENGINEERING CORP. Any use or reproduction, in any form, without prior written permission of Banner is prohibited.
© 2015 Banner Engineering Corp.

THIRD ANGLE PROJECTION

BANNER ENGINEERING CORP.
www.bannerengineering.com

TITLE

PBF6 SERIES UNTERMINATED

SIZE	DRAWING NO.	REV.
B	176179	A
SCALE 3:1		SHEET 1 OF 1

CREO

ПРОМЭЛЕКТРОНИКА/ sales@prom-elec.com