MODEL NO.	"L"	P/N
IAT46ST5TA-VL	2000	96026
IAT43ST5TA-VL	1000	96025

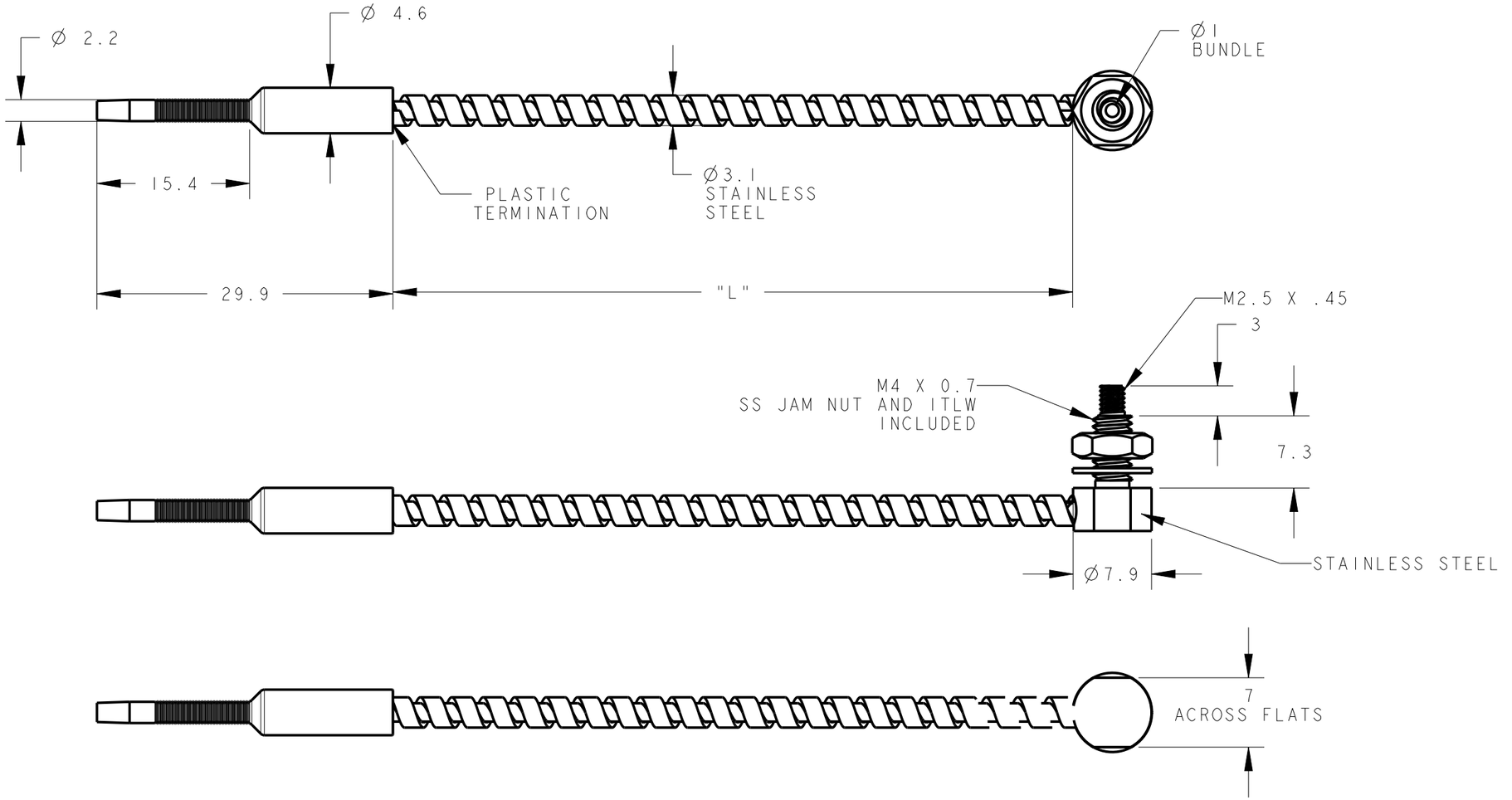

NOTES:
1. ALL DIMENSIONS ARE MILLIMETERS [INCHES] UNLESS OTHERWISE NOTED.
2. OPERATING TEMPERATURE AT TIP -140°C ~ +249°C.
3. MINIMUM BEND RADIUS R25.

This drawing is the property of BANNER ENGINEERING CORP. and is proprietary in general and in detail. Its contents shall not be revealed to outside parties without written consent of BANNER.

THIRD ANGLE PROJECTION

BANNER ENGINEERING CORP.
P.O. BOX 9414
MINNEAPOLIS, MN 55440

TITLE

IAT4 SERIES GLASS FIBER TIGHT ANGLE M4 THREAD W/M2.5 THREAD VL

SIZE	DRAWING NO.	REV.
B	189694	A
SCALE 2:1	SHEET 1 OF 1	

PRO/E

ПРОМЭЛЕКТРОНИКА/ sales@prom-elec.com