Features

- Self-contained Class 1 modulated visible laser diode emitters permit higher gain and extended range in opposed mode sensing systems
- Narrow effective beam for small-object detection or for precise position control
- 10 V DC to 30 V DC operation; third wire extinguishes laser light when connected to +V DC
- Compatible with all EZ-BEAM® receivers; may also be used with a variety of other banner-modulated photoelectric receivers
- 18-millimeter threaded barrel design



WARNING:

- **Do not use this device for personnel protection**
- Using this device for personnel protection could result in serious injury or death.
- This device does not include the self-checking redundant circuitry necessary to allow its use in personnel safety applications. A device failure or malfunction can cause either an energized (on) or de-energized (off) output condition.

Models

Model	Range	Cable	Supply Voltage	Effective Beam at Receiver at 25 °C
S186ELD	Range varies, depending on which receiver is used (see "Excess Gain" on page 4)	2 m (6.5 feet) unterminated	10 V DC to 30 V DC	See nested table
S186ELDQ		4-wire M12 quick-disconnect connector		

Opposed Distance	Beam Width
1.5 m (5 ft)	4 mm (0.2 in)
3.0 m (10 ft)	5.5 mm (0.2 in)
6.1 m (20 ft)	8.5 mm (0.3 in)
15 m (50 ft)	18 mm (0.7 in)
30 m (100 ft)	32 mm (1.3 in)

To order the 9 m (30 ft) PVC cable model, add the suffix "W/30" to the cabled model number. For example: S186ELD W/30. Models with a quick disconnect require a mating cordset.

Installation Instructions

Mount the Device

1. If a bracket is needed, mount the device onto the bracket.
2. Mount the device (or the device and the bracket) to the machine or equipment at the desired location. Do not tighten the mounting screws at this time.
3. Check the device alignment.
4. Tighten the mounting screws to secure the device (or the device and the bracket) in the aligned position.

Wiring Diagrams

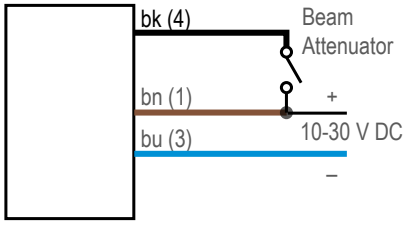

Key

1 = Brown
2 = White
3 = Blue
4 = Black

NOTE: Quick disconnect wiring diagrams are functionally identical.

Original Instructions
06-Feb-26

© Banner Engineering Corp. All rights reserved.
www.bannerengineering.com

35749
p/n: 35749 Rev. F

ПРОМЭЛЕКТРОНИКА/ sales@prom-elec.com

Alignment

The beam size listed is also the effective beam size at the receiver. The effective beam is equal to the minimum opaque object profile required to block the light beam. The beam size at the emitter is 2.5 mm (0.1 in) diameter.

Laser emitter beam divergence at 25 °C (beam size vs. distance)

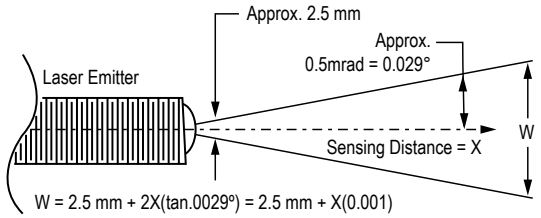

Opposed Distance (X)	Beam Width (W)
1.5 m (5 ft)	4 mm (0.2 in)
3.0 m (10 ft)	5.5 mm (0.2 in)
6.1 m (20 ft)	8.5 mm (0.3 in)
15 m (50 ft)	18 mm (0.7 in)
30 m (100 ft)	32 mm (1.3 in)

The effect of angular misalignment is dramatic. Laser emitters require the beam center to directly strike the receiver lens. "Beam Displacement per degree of misalignment" on page 2 shows how far the laser beam will miss the center of the receiver lens for each degree of angular misalignment. Note that even at only a 1.5 m (5 ft) range, one degree of misalignment causes the laser beam to miss the lens of most receivers.

TIP: The visible red beam of the laser emitter is easily seen in subdued lighting. At opposed distances of up to 3 m (10 ft), attach a sheet of white paper directly in front of the receiver lens. Mark the location of the lens center on the paper; use the mark as an aiming target. Sight along the beam from directly behind the laser emitter. Adjust the emitter mounting until the red image (the dot of red light) is centered exactly on the mark. Remove the paper and check the response of the receiver.

Beam Displacement per degree of misalignment

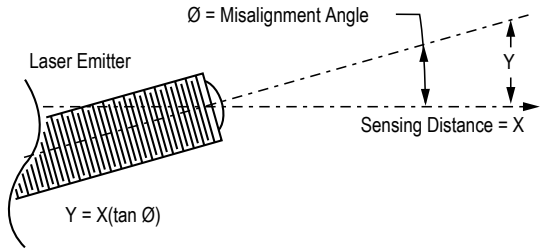

Opposed Distance (X)	Beam Displacement (Y) of 1° of Misalignment
1.5 m (5 ft)	4 mm (0.2 in)
3.0 m (10 ft)	50 mm (2 in)
6.1 m (20 ft)	100 mm (4 in)
15 m (50 ft)	250 mm (10 in)
30 m (100 ft)	500 mm (20 in)

For longer distances (up to 7.6 m [25 ft]), replace the white paper with a 100 mm (4 in) × 100 mm (4 in) square of high-grade retroreflective tape (Banner model BRT-THG-4X4-5 or equivalent. For greater distances, use a larger sheet of retroreflective material.

NOTE: Never use a mirror as an alignment target.

At long distances, use retroreflective tape to locate the beam at the receiver location

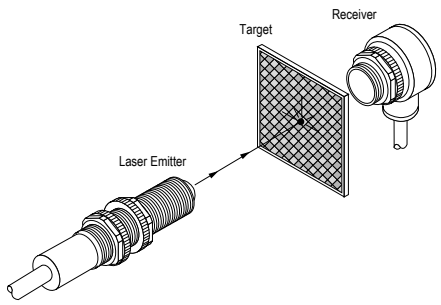

© Banner Engineering Corp. All rights reserved.
www.bannerengineering.com

Specifications

Supply Voltage and Current
10 V DC to 30 V DC (10% maximum ripple) at less than 35 mA

Supply Protection Circuitry
Protected against reverse polarity

Sensing Beam
Visible red Class 1 laser (temperature coefficient 0.2 nm/°C) (see "Class 1 Laser Description and Safety Information" on page 3)

Rep Rate: 30 µs

Beam Diameter at Aperture
2.5 mm (0.10 in) collimated ellipse

Beam Divergence
±0.5 milliradians typical

Laser Control
Enable the beam by applying 0 V DC or by opening the circuit; apply +10 V DC to 30 V DC to the black wire to inhibit the beam

Indicators
Green indicator, visible through the rear cover, indicates power is applied

Construction
M18 x 1 threaded yellow PBT polyester barrel housing. Acrylic lens. Electronics totally encapsulated. Two mounting nuts are included.

Environmental Rating
NEMA 6P; IP67

Connections
2 m (6.5 ft) or 9 m (30 ft) unterminated 4-wire PVC cable
Integral 4-pin M12 male quick-disconnect connector

Operating Conditions
Temperature: –10 °C to +50 °C (+14 °F to +122 °F)
90% at +50 °C maximum relative humidity (non-condensing)

Certifications

Class 1 Laser Description and Safety Information



Laser light. Do not stare into the beam.

Complies with 21 CFR 1040.10 and 1040.11 except for deviations pursuant to Laser Notice No. 56, dated May 8, 2019.

CLASS 1
LASER PRODUCT



CAUTION:
- **Never stare directly into the sensor lens.**
- Laser light can damage your eyes.
- Avoid placing any mirror-like object in the beam. Never use a mirror as a retroreflective target.



CAUTION:
- **Return defective units to the manufacturer.**
- Use of controls or adjustments or performance of procedures other than those specified herein may result in hazardous radiation exposure.
- Do not attempt to disassemble this sensor for repair. A defective unit must be returned to the manufacturer.



CAUTION:
- **Ne regardez jamais directement la lentille du capteur.**
- La lumière laser peut endommager la vision.
- Évitez de placer un objet réfléchissant (de type miroir) dans la trajectoire du faisceau. N'utilisez jamais de miroir comme cible rétro-réfléchissante.



CAUTION:
- **Tout dispositif défectueux doit être renvoyé au fabricant.**
- L'utilisation de commandes, de réglages ou de procédures autres que celles décrites dans le présent document peut entraîner une exposition dangereuse aux radiations.
- N'essayez pas de démonter ce capteur pour le réparer. Tout dispositif défectueux doit être renvoyé au fabricant.

Class 1 lasers are lasers that are safe under reasonably foreseeable conditions of operation, including the use of optical instruments for intrabeam viewing.

Complies with IEC 60825-1:2014 and EN 60825-1:2014+A11:2021.

© Banner Engineering Corp. All rights reserved.
www.bannerengineering.com

For safe laser use:

- Do not stare at the laser.
- Do not point the laser at a person's eye.
- Mount open laser beam paths either above or below eye level, where practical.
- Terminate the beam emitted by the laser product at the end of its useful path.

Class 1 Laser Characteristics

Output power: ≤1 mW
Laser wavelength: 650 nm
Pulse duration: 7 µs

Dimensions

All measurements are listed in millimeters [inches], unless noted otherwise. The measurements provided are subject to change.

Cabled Model

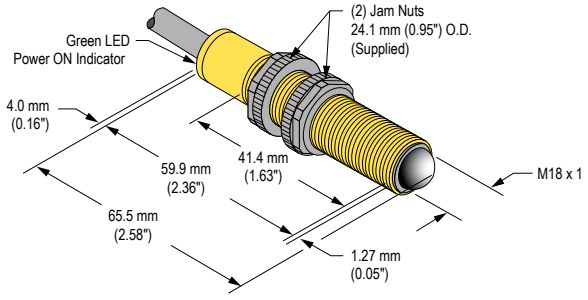

Quick-Disconnect Model

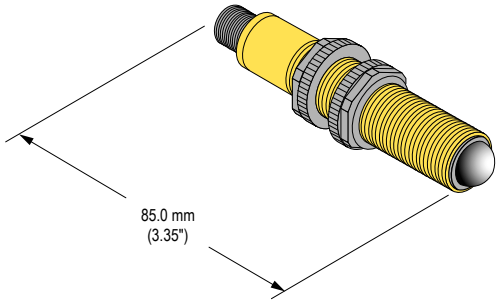

Excess Gain

Excess Gain of the S186ELD emitter depends on the receiver used. Following is a comparison of the excess gain for recommended receivers at 15 m (50 ft). For information on compatibility of the S186ELD emitter with other Banner photoelectric receivers, contact Banner Engineering.

MULTI-BEAM®	MAXI-BEAM®	VALU-BEAM®	EZ-BEAM®	MINI-BEAM®	ECONO-BEAM®	Others
SBRX1 3,000	**RSBR** 750	**SMW95R** 5,000	**T18SN6R** 400	**SM31R** 300	**SE61R** 45	**SM51RB** 140
SBR1 3,000	**RSBRSR** 120	**SMI91RQD** 3,000	**T30SN6R** 400	**SM31RL** 1,700	**SE61RMHS** 40	**Q23SN6R** 25
SBRXD1 3,000			**S12SN6R** 400	**SM31RMHS** 200		**Q10AN6R** 20
SBRD1 3,000				**SM31RLMHS** 1,100		**Q45BB6R** 1,500

© Banner Engineering Corp. All rights reserved.
www.bannerengineering.com

Accessories

4-Pin M12 Cordsets

4-pin Single-Ended M12 Female Cordsets (datasheet p/n 235937)				
Model	**Length**	**Dimensions (mm)**	**Pinout (Female)**	
BC-M12F4-22-1	1 m (3.28 ft)	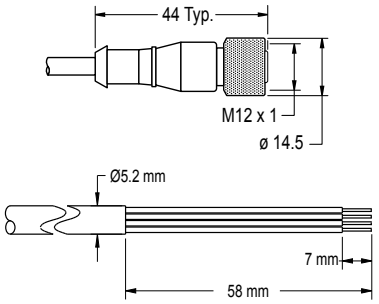	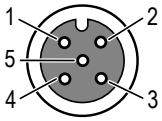	1 = Brown 2 = White 3 = Blue 4 = Black 5 = Unused c UL us LISTED
BC-M12F4-22-2	2 m (6.56 ft)			
BC-M12F4-22-5	5 m (16.4 ft)			
BC-M12F4-22-8	8 m (26.25 ft)			
BC-M12F4-22-10	10 m (30.81 ft)			
BC-M12F4-22-15	15 m (49.2 ft)			
BC-M12F4-22-20	20 m (65.61 ft)			
BC-M12F4-22-25	25 m (82.02 ft)			
BC-M12F4-22-30	30 m (98.42 ft)			

4-pin Single-Ended M12 Female Right-Angle Cordsets (datasheet p/n 235937)				
Model	**Length**	**Dimensions (mm)**	**Pinout (Female)**	
BC-M12F4A-22-1	1 m (3.28 ft)	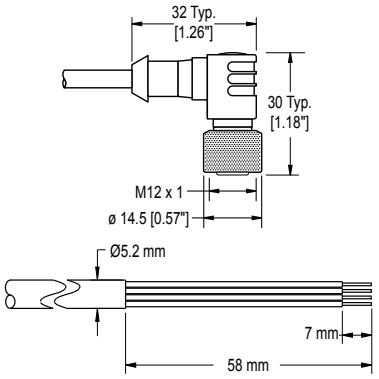	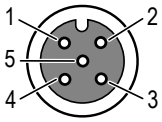	1 = Brown 2 = White 3 = Blue 4 = Black 5 = Unused c UL us LISTED
BC-M12F4A-22-2	2 m (6.56 ft)			
BC-M12F4A-22-5	5 m (16.4 ft)			
BC-M12F4A-22-8	8 m (26.25 ft)			
BC-M12F4A-22-10	10 m (30.81 ft)			
BC-M12F4A-22-15	15 m (49.2 ft)			

Brackets

SMB46A

- 2-piece 12-ga. stainless steel bracket assembly with precision sensor alignment adjustment
- 2 mm hex key included
- CAD Files: DXF, PDF, IGS, STP

Hole center spacing: A to B = 18.5, B = 30.5
Hole size: A = ø 6.6, B = 7.1 x 20.3

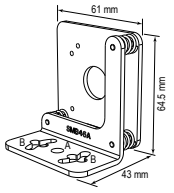

SMB18A

- Right-angle mounting bracket with a curved slot for versatile orientation
- 12-ga. stainless steel
- 18 mm sensor mounting hole
- Clearance for M4 (#8) hardware
- CAD Files: DXF, PDF, IGS, STP

Hole center spacing: A to B = 24.2
Hole size: A = ø 4.6, B = 17.0 × 4.6, C = ø 18.5

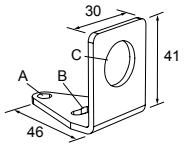

© Banner Engineering Corp. All rights reserved.
www.bannerengineering.com

Reflective Tape

Model	Reflectivity Factor	Maximum Temperature	Size	Unit	
BRT-THG-4X4-5	0.7	+60 °C (+140 °F)	102 mm × 102 mm (4 in × 4 in)	Package of 5	
BRT-THG-8.5X11-2			216 mm × 279 mm (8.5 in × 11 in)	Package of 2	
BRT-THG-18X36			457 mm × 914 mm (18 in × 36 in)	Single Sheet	

Banner Engineering Corp Limited Warranty

Banner Engineering Corp. warrants its products to be free from defects in material and workmanship for one year following the date of shipment. Banner Engineering Corp. will repair or replace, free of charge, any product of its manufacture which, at the time it is returned to the factory, is found to have been defective during the warranty period. This warranty does not cover damage or liability for misuse, abuse, or the improper application or installation of the Banner product.

THIS LIMITED WARRANTY IS EXCLUSIVE AND IN LIEU OF ALL OTHER WARRANTIES WHETHER EXPRESS OR IMPLIED (INCLUDING, WITHOUT LIMITATION, ANY WARRANTY OF MERCHANTABILITY OR FITNESS FOR A PARTICULAR PURPOSE), AND WHETHER ARISING UNDER COURSE OF PERFORMANCE, COURSE OF DEALING OR TRADE USAGE.

This Warranty is exclusive and limited to repair or, at the discretion of Banner Engineering Corp., replacement. **IN NO EVENT SHALL BANNER ENGINEERING CORP. BE LIABLE TO BUYER OR ANY OTHER PERSON OR ENTITY FOR ANY EXTRA COSTS, EXPENSES, LOSSES, LOSS OF PROFITS, OR ANY INCIDENTAL, CONSEQUENTIAL OR SPECIAL DAMAGES RESULTING FROM ANY PRODUCT DEFECT OR FROM THE USE OR INABILITY TO USE THE PRODUCT, WHETHER ARISING IN CONTRACT OR WARRANTY, STATUTE, TORT, STRICT LIABILITY, NEGLIGENCE, OR OTHERWISE.**

Banner Engineering Corp. reserves the right to change, modify or improve the design of the product without assuming any obligations or liabilities relating to any product previously manufactured by Banner Engineering Corp. Any misuse, abuse, or improper application or installation of this product or use of the product for personal protection applications when the product is identified as not intended for such purposes will void the product warranty. Any modifications to this product without prior express approval by Banner Engineering Corp will void the product warranties. All specifications published in this document are subject to change; Banner reserves the right to modify product specifications or update documentation at any time. Specifications and product information in English supersede that which is provided in any other language. For the most recent version of any documentation, refer to: www.bannerengineering.com.

For patent information, see www.bannerengineering.com/patents.

© Banner Engineering Corp. All rights reserved.
www.bannerengineering.com