SureCross® Quick Start Guide for DX80SRxM-H Serial Data Radios

Setting Up a Serial Data Radio System

Use this Quick Start Guide to set up a simple point-to-point serial wireless link on your desk. We recommend completing these steps when setting up your first network to avoid common mistakes.

Step 1 - Create a working system without the radios.

1. Assemble the two devices you would like to connect wirelessly on your desk. For this example, we are connecting a SureCross DX80 Gateway radio and a notebook computer.
2. Connect the computer and Gateway using an RS-485 cable. For this example, we are using a BWA-UCT-900 USB to RS-485 adapter cable and a DX80G9M2S-P Performance FlexPower Gateway.





3. Configure the COM port settings of both devices and verify the system works properly before installing the radios. If possible, use the default radio settings of 19,200 bps, 8 data bits, no parity, and 1 stop bit.
4. Note the communication settings your system is using. The following settings are supported by the serial radio:
   - Data Rate: 19200 (default), 1200, 2400, 9600, 38400, 57600,or 11520
   - Parity: None (default), odd, even
   - Note that 8 data bits and 1 stop bit must be used when connecting to the serial data radios. These settings are not configurable.

Printed in USA May 2013 P/N 172024 Rev. A

ПРОМЭЛЕКТРОНИКА/ sales@prom-elec.com

Step 2 - Configure the Serial Data Radios' DIP Switches

1. To access the DIP switches, remove the four screws on the cover and lift the cover off the radio base.
2. Unplug the ribbon cable from under the radio cover.
3. With the radio top facing up, gently tap the radio top on the table. The black plastic cover should fall out, revealing the DIP switches.
4. Configure one radio to be the master radio (Master Routed mode: 6 and 8 ON).
5. Configure the second radio to be a slave radio (Slave Routed mode: 6 and 7 ON).
6. Set DIP switches 1 through 5 according to your baud rate and parity on both the master and slave radios. Refer to the Serial Data Radio datasheet for DIP switch settings.

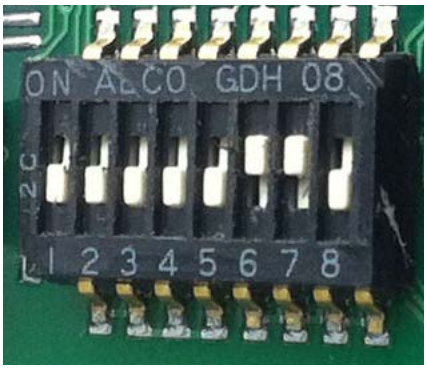

Slave radio with DIP switches 6 and 7 in the ON position.



Master radio with DIP switches 6 and 8 in the ON position.

Step 3 - Connect the Serial Data Radios to the Devices

Replace the serial cable with the Serial Data Radios.

1. Connect the master serial data radio to the notebook computer.
2. Connect the slave serial data radio to the Gateway.

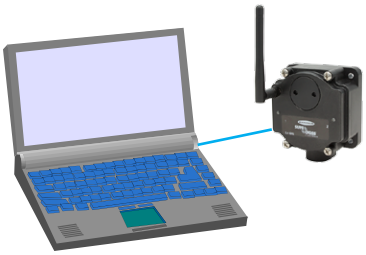



Step 4 - Apply Power to the Serial Data Radios

1. Wire power and serial lines to the base screw terminals. For this example, wire the terminals to the color as shown.
2. Reinstall the ribbon cable.
3. Replace the radio covers.
4. Apply power to both radios.

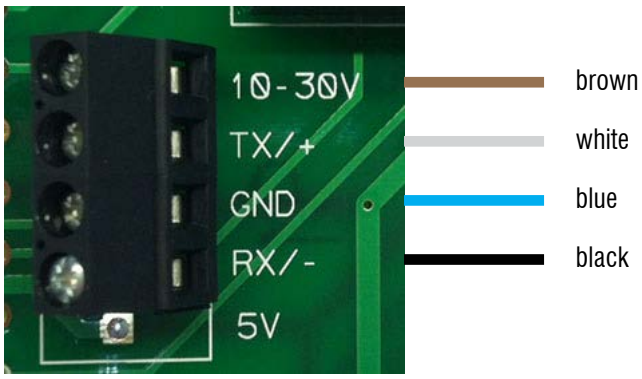

Step 5 - Form the Wireless Network

1. Use the supplied spanner wrench to remove the front round cover.
2. To enter binding mode, triple-click the button on both the master and slave radios.

   While in binding mode, the slave radio pairs up to the master radio. During this process, both LEDs alternately flash red on both devices.

   After binding is complete, the slave radio automatically exits binding mode. The master radio remains in binding mode so users can bind additional slave radios. To exit binding mode on the master radio, double-click the button.

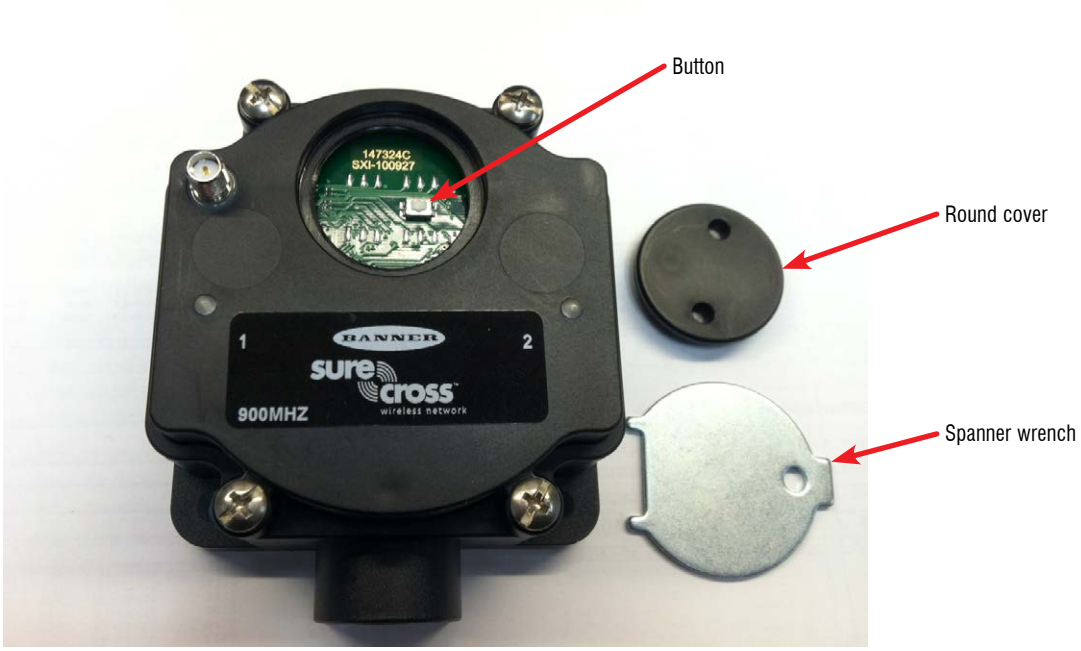

Troubleshooting

LED 1	LED 2	Description
Flashing green every 4 seconds		Radio is working properly.
Flashing red every 4 seconds		Lost radio connection Solution: • Move the radios at least 6 feet apart. • Re-run the binding procedure. • Verify one radio is configured as a master radio and one as the slave radio.
	Flashing yellow	Serial data traffic. Serial data is being sent or received.



more sensors, more solutions

Banner Engineering Corp. warrants its products to be free from defects in material and workmanship for one year following the date of shipment. Banner Engineering Corp. will repair or replace, free of charge, any product of its manufacture which, at the time it is returned to the factory, is found to have been defective during the warranty period. This warranty does not cover damage or liability for misuse, abuse, or the improper application of the Banner product.

THIS LIMITED WARRANTY IS EXCLUSIVE AND IN LIEU OF ALL OTHER WARRANTIES WHETHER EXPRESS OR IMPLIED (INCLUDING, WITHOUT LIMITATION, ANY WARRANTY OF MERCHANTABILITY OR FITNESS FOR A PARTICULAR PURPOSE), AND WHETHER ARISING UNDER COURSE OF PERFORMANCE, COURSE OF DEALING OR TRADE USAGE.

This Warranty is exclusive and limited to repair or, at the discretion of Banner Engineering Corp., replacement. **IN NO EVENT SHALL BANNER ENGINEERING CORP. BE LIABLE TO BUYER OR ANY OTHER PERSON OR ENTITY FOR ANY EXTRA COSTS, EXPENSES, LOSSES, LOSS OF PROFITS, OR ANY INCIDENTAL, CONSEQUENTIAL OR SPECIAL DAMAGES RESULTING FROM ANY PRODUCT DEFECT OR FROM THE USE OR INABILITY TO USE THE PRODUCT, WHETHER ARISING IN CONTRACT OR WARRANTY, STATUTE, TORT, STRICT LIABILITY, NEGLIGENCE, OR OTHERWISE.**

Banner Engineering Corp. reserves the right to change, modify or improve the design of the product without assuming any obligations or liabilities relating to any product previously manufactured by Banner Engineering Corp.

The manufacturer does not take responsibility for the violation of any warning listed in this document.

CAUTION. Make no modifications to this product. Any modifications to this product not expressly approved by Banner Engineering could void the user's authority to operate the product. Contact the Factory for more information.

Lightning Arrestors/Surge Protection. Always use lightning arrestors/surge protection with all remote antenna systems to avoid invalidating the Banner Engineering Corp. warranty. No surge protector can absorb all lightning strikes. Do not touch the SureCross device or any equipment connected to the SureCross device during a thunderstorm.

All specifications published in this document are subject to change. Banner reserves the right to modify the specifications of products, prior to their order, without notice. Banner Engineering reserves the right to update or change documentation at any time. For the most recent version of any documentation, please refer to our website: www.bannerengineering.com. © 2006-2012 Banner Engineering Corp. All rights reserved.

P/N 172024 Rev. A