# SSA-EB1PLxx-02ED1Q5x Flush Mount Series Emergency Stop Push Buttons

## Features

*Illuminated Safety BUS Gateway Compatible Flush Mount Electro-Mechanical Push Buttons*

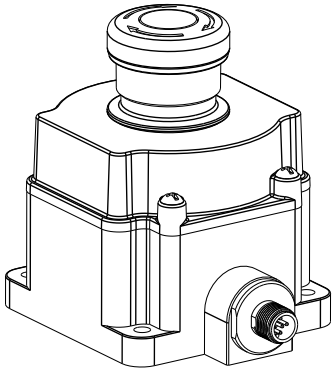

- Designed to interface with Safety BUS nodes/gateways
- Rugged design; easy installation with no assembly or individual wiring required
- Push-to-stop, twist-to-release, or pull-to-release operation per EN 60947-5-5
- Latching design complies with ISO 13850; direct (positive) opening operation per EN 60947-5-1
- Compliant with ANSI B11.19, NFPA 79, and IEC/EN 60204-1 Emergency Stop requirements
- “Safe Break Action” ensures normally closed (NC) contacts will open if the contact block is separated from the actuator
- 5-pin M12 quick disconnect
- Models with highly visible indication of actuation (armed or depressed/ latched button)
- "Emergency Stop" legend included

Models SSA-EB… series are "mushroom-style" electro-mechanical emergency stop push buttons. When the button is armed, the switch's safety contacts (normally closed/NC) are closed and its monitoring contacts (normally open/NO), if present, are open. When the button is pushed, the switch's safety contacts open, and the monitoring contacts close. The contacts remain in this condition until the push button is manually rearmed by twisting clockwise the red push button actuator, or by pulling on the models with the standard actuator. The SSA-EB1 Series Emergency Stop Button series has a flat mounting base for ease of mounting without requiring an additional enclosure.

The EZ-LIGHT® illumination logic allows for easy identification of a pushed/actuated button. An armed button is either a steady yellow illumination or off (depending on model), a pushed/actuated button is indicated by a red illumination (flashing or solid depending on model).

## Models

| Model | EZ-LIGHT® Illumination Logic and Description | Compatibility |
|---|---|---|
| **SSA-EB1PL-02ED1Q5A** | OFF (armed), RED (solid, PUSH) | 5-pin M12 QD Safety BUS node compatible(1)<br>CH1 = pins 1 & 2<br>CH2 = pins 4 & 5 |
| **SSA-EB1PLXR-02ED1Q5A** | OFF (armed), RED (flash, PUSH) | |
| **SSA-EB1PLYR-02ED1Q5A** | YELLOW (armed) & RED (flash, PUSH) | |
| **SSA-EB1PL-02ED1Q5B** | OFF (armed), RED (solid, PUSH) | 5-pin M12 QD Safety BUS node compatible(2)<br>CH1 = pins 1 & 4<br>CH2 = pins 2 & 5 |
| **SSA-EB1PLXR-02ED1Q5B** | OFF (armed), RED (flash, PUSH) | |
| **SSA-EB1PLYR-02ED1Q5B** | YELLOW (armed) & RED (flash, PUSH) | |

Additional models available. For non-illuminated models, see http://www.bannerenginnering.com and search 162756.

## Important... Read this before proceeding!

**The user is responsible for satisfying all local, state, and national laws,** rules, codes, and regulations relating to the use of this product and its application. Banner Engineering Corp. has made every effort to provide complete application, installation, operation, and maintenance instructions. Please contact a Banner Applications Engineer with any questions regarding this product.

**The user is responsible** for making sure that all machine operators, maintenance personnel, electricians, and supervisors are thoroughly familiar with and understand all instructions regarding the installation, maintenance, and use of this product, and with the machinery it controls. The user and any personnel involved with the installation and use of this product must be thoroughly familiar with all applicable standards, some of which are listed within the specifications. Banner Engineering Corp. makes no claim regarding a specific recommendation of any organization, the accuracy or effectiveness of any information provided, or the appropriateness of the provided information for a specific application.

(1) Compatible with AllenBradley ArmorBlock® 1732DS Safe DeviceNet remote I/O
(2) Compatible with Siemens ET 200pro PROFIsafe gateway

Original Instructions
July 10, 2023

© Banner Engineering Corp.

p/n: 165999 Rev. E

ПРОМЭЛЕКТРОНИКА/ sales@prom-elec.com

**WARNING:**
- **Not a safeguarding device**
- Failure to follow these instructions could result in serious injury or death.
- This device is not considered a safeguarding device because it requires an overt action by an individual to stop machine motion or hazards. A safeguarding device limits or eliminates an individual's exposure to a hazard without action by the individual or others. This device cannot be substituted for required safeguarding. Refer to the applicable standards to determine those requirements.

## Emergency Stop Considerations

NFPA 79, ANSI B11.19, IEC/EN 60204-1, and ISO 13850 specify emergency stop requirements, including the following:
- Emergency-stop push buttons shall be located at each operator control station and at other operating stations where emergency shutdown is required.
- Stop and emergency-stop push buttons shall be continuously operable and readily accessible from all control and operating stations where located. Do not mute or bypass E-stop buttons.
- Actuators of emergency-stop devices shall be colored red. The background immediately around the device actuator shall be colored yellow (where possible). The actuator of a push-button-operated device shall be of the palm or mushroom-head type.
- The emergency-stop actuator shall be a self-latching type.

**WARNING:**
- **Do not mute or bypass any emergency stop device**
- Muting or bypassing the safety outputs renders the emergency stop function ineffective.
- ANSI B11.19, NFPA 79 and IEC/EN 60204-1 require that the emergency stop function remains active at all times.

**WARNING:**
- **Connect two or more devices to the same safety module (controller) in series**
- Connecting devices in parallel defeats the switch contact monitoring ability of the module and creates an unsafe condition that could result in serious injury or death.
- Failure to test each device individually in this manner could result in undetected faults and create an unsafe condition that could result in serious injury or death.
- Connect the contacts of the corresponding pole of each switch in series. Never connect the contacts of multiple switches in parallel. Individually actuate (engage) each device, then release (or re-arm) and reset the safety module. This allows the module to check each switch and its wiring to detect faults. Perform this check during the prescribed checkouts.

## Installation and Maintenance

The device must not be affected by environmental conditions. **Install the device so that operation is not impeded, but should be protected against inadvertent operation** (for example, accidental actuation by being bumped or leaned against). Do not operate the switch using a tool. Do not expose the switch to excessive shocks and vibrations, otherwise the switch may be deformed or damaged, causing malfunction or operation failure. M5 mounting hardware is included.

Electrical installation must be made by qualified personnel[1] and must comply with NEC (National Electrical Code), NFPA 79 or IEC/EN 60204-1, and all applicable local standards. It is not possible to give exact wiring instructions for a device that interfaces to a multitude of machine control configurations. The following is general in nature; it is recommended to perform a risk assessment to ensure appropriate application, interfacing/hookup, and risk reduction (see ISO 12100 or ANSI B11.0).

*SSA-EB1xxLxx-02ED1Q5A Compatible with AllenBradley ArmorBlock® 1732DS Safe DeviceNet remote I/O and SSA-EB1xxLxx-02ED1Q5B Compatible with Siemens ET 200pro PROFIsafe gateway*

| Wiring Connection | | -02ED1Q5A | | -02ED1Q5B | | Pinout (Male) |
|---|---|---|---|---|---|---|
| Pin | Color | Function | Contacts | Function | Contacts | |
| 1[2] | Brown | CH1a | N.C. | CH1b | N.C. | 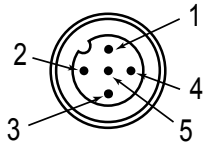 |
| 2 | White | CH1b | N.C. | CH2a | N.C. | |
| 3 | Blue | 0V dc | | 0V dc | | |
| 4 | Black | CH2a | N.C. | CH1a | N.C. | |

Continued on page 3



[1] A Qualified Person possesses a recognized degree or certificate or has extensive knowledge, training, and experience to solve problems relating to the emergency stop installation.
[2] Pin 1 on all models requires power from the node/gateway for the EZ-LIGHT™ illumination logic (see LED Voltage/Current specifications). User must verify interconnection compatibility.


© Banner Engineering Corp.

Continued from page 2

| Wiring Connection | | -02ED1Q5A | | -02ED1Q5B | | Pinout (Male) |
|---|---|---|---|---|---|---|
| Pin | Color | Function | Contacts | Function | Contacts | |
| 5 | Gray | CH2b | N.C. | CH2b | N.C. | |

**WARNING:**
- **Risk of electric shock**
- Use extreme caution to avoid electrical shock. Serious injury or death could result.
- Always disconnect power from the safety system (for example, device, module, interfacing, etc.), guarded machine, and/or the machine being controlled before making any connections or replacing any component. Lockout/tagout procedures might be required. Refer to OSHA 29CFR1910.147, ANSI Z244-1, or the applicable standard for controlling hazardous energy.
- Make no more connections to the device or system than are described in this manual. Electrical installation and wiring must be made by a Qualified Person[1] and must comply with the applicable electrical standards and wiring codes, such as the NEC (National Electrical Code), NFPA 79, or IEC 60204-1, and all applicable local standards and codes.

## Checkout

At machine set up, a *Designated Person*[2] should test each safety point for proper machine shutdown response. A *Designated Person* should check the safety point for proper operation, physical damage, button looseness, and excessive environmental contamination. This should take place on a periodic schedule determined by the user, based on the severity of the operating environment and the frequency of switch actuations.

Adjust, repair, or replace components as needed. If inspection reveals contamination on the switch, thoroughly clean the switch and eliminate the cause of the contamination. Replace the switch and/or appropriate components when any parts or assemblies are damaged, broken, deformed, or badly worn; or if the electrical/mechanical specifications (for the environment and operating conditions) have been exceeded.

**Always test the control system for proper functioning** under machine control conditions after performing maintenance, replacing the safety point, or replacing any component of the device.

## Specifications

**Housing / Button**

Polycarbonate / Polyamide / Aluminum

#10 or M5 (M5 hardware included); Maximum Tightening Torque: 0.56 N·m (5 in·lbf)

**Operating Conditions**

**Temperature:** –25 °C to +55 °C (–13 °F to +131 °F)

**Humidity:** 45% to 85% relative humidity (no condensation)

**Environmental Rating**

IP65 (IEC60529)

**Insulation Resistance**

100 MΩ minimum (500 V DC megger)

**Impulse Withstand Voltage**

2.5 kV

**Pollution Degree**

3

**Output Configuration**

See "Installation and Maintenance" on page 2

**Overvoltage Category**

II

**Contact Material/Bounce**

Gold plated silver / 20 ms

When the button is reset, the normally closed contacts will chatter. When pressing the button, the normally open contacts will chatter. When designing a control circuit, take the contact chatter time into consideration. Do not expose the switch to external shocks, otherwise the contacts will bounce.

**Required Overcurrent Protection**

**WARNING:** Electrical connections must be made by qualified personnel in accordance with local and national electrical codes and regulations.

Overcurrent protection is required to be provided by end product application per the supplied table.

Overcurrent protection may be provided with external fusing or via Current Limiting, Class 2 Power Supply.

Supply wiring leads < 24 AWG shall not be spliced.

For additional product support, go to www.bannerengineering.com.

| Supply Wiring (AWG) | Required Overcurrent Protection (A) | Supply Wiring (AWG) | Required Overcurrent Protection (A) |
|---|---|---|---|
| 20 | 5.0 | 26 | 1.0 |
| 22 | 3.0 | 28 | 0.8 |
| 24 | 1.0 | 30 | 0.5 |

**Electrical Life**

100,000 operations minimum, 250,000 operations minimum at 24 V AC/DC, 100 mA

[1] A person who, by possession of a recognized degree or certificate of professional training, or who, by extensive knowledge, training and experience, has successfully demonstrated the ability to solve problems relating to the subject matter and work.

[2] A *Designated Person* is identified in writing by the employer as being appropriately trained to perform a specified checkout procedure. A Qualified Person possesses a recognized degree or certificate or has extensive knowledge, training, and experience to solve problems relating to the emergency stop installation.


© Banner Engineering Corp.

**Mechanical Life**

250,000 operations

**Shock Resistance**

Operating extremes: 150 m/s$^2$ (15G)

**Vibration Resistance**

Operating extremes: 10 Hz to 500 Hz, amplitude 0.35 mm acceleration 50 m/s$^2$

**LED Color**

Yellow - 590 nm, Red - 618 nm

**LED Flash Rate**

1.6 Hz at 50% duty cycle

**LED Voltage/Current**

12 V DC to 30 V DC; 120 mA at 12 V DC, 65 mA at 24 V DC, 60 mA at 30 V DC

**Electrical Rating**

Minimum load: 1 mA at 5 V AC/DC

**SSA-EB1xxLxx-02ED1Q5xx:** 3A at 250V maximum

UL Applications: 1.5 A at 250 V AC, 1 A at 30 V DC (pilot duty)

CE Applications: AC-15: 1.5 A at 250 V AC, DC-13: 1 A at 30 V DC

**Rated Insulation Voltage (Ui)**

250 V

**Rated Current (Ith)**

3A

**B10d**

100,000 (based on ISO13849-1(2006))

**Design Standards**

Compliant with EN 60497-1 / -5-1, ISO 13850, ANSI B11.19 , NFPA 79, IEC/EN 60204-1

**Date code format (U.S. Standard Format)**

**YYWWX:** 2-digit year, 2-digit week, "X" internal code

**Rated Operating Current**

| Safety Contact (N.C.) | | 30 V | 125 V | 250 V |
|---|---|---|---|---|
| AC 50/60 Hz | Resistive Load (AC-12) | - | - | 3 A |
| | Inductive Load (AC-15) | - | 3 A | 1.5 A |
| DC | Resistive Load (DC-12) | 2 A | 0.4 A | 0.2 A |
| | Inductive Load (DC-13) | 1 A | 0.22 A | 0.1 A |

The operating current is classified according to EN 60947-5-1 making and breaking capacities and are measured at resistive/inductive load types specified in EN 60947-5-1. See "Electrical Rating" above for specific model and UL/CE maximum ratings.

**Certifications**

Banner Engineering BV
Park Lane, Culliganlaan 2F bus 3
1831 Diegem, BELGIUM

Turck Banner LTD Blenheim House
Blenheim Court
Wickford, Essex SS11 8YT
GREAT BRITAIN

## Dimensions

All measurements are listed in millimeters [inches], unless noted otherwise.

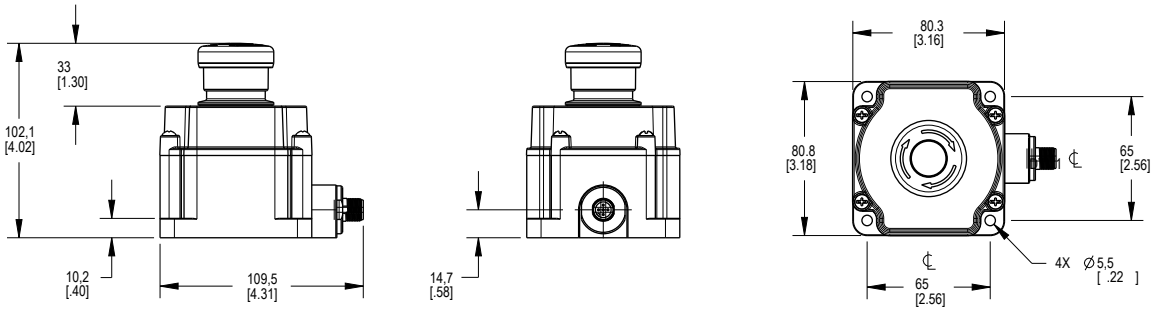



© Banner Engineering Corp.

## Cordsets

| 5-Pin Threaded M12 Cordsets—Double Ended | | | | | |
|---|---|---|---|---|---|
| **Model** | **Length** | **Style** | **Dimensions** | **Pinout (Male)** | **Pinout (Female)** |
| **DEE2R-51D** | 0.3 m (1 ft) | Female Straight/ Male Straight | 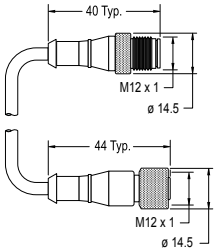 | 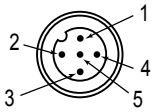 | 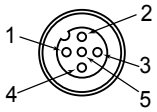 |
| **DEE2R-53D** | 0.91 m (3 ft) | | | | |
| **DEE2R-58D** | 2.44 m (8 ft) | | | | |
| **DEE2R-515D** | 4.57 m (15 ft) | | | | |
| **DEE2R-525D** | 7.62 m (25 ft) | | | | |
| **DEE2R-550D** | 15.2 m (50 ft) | | | 1 = Brown<br>2 = White<br>3 = Blue | 4 = Black<br>5 = Green/Yellow |
| **DEE2R-575D** | 22.9 m (75 ft) | | | | |
| **DEE2R-5100D** | 30.5 m (100 ft) | | | | |

See Banner Engineering catalog or go to www.bannerengineering.com for additional models and complete information.

## US Application Standards

ANSI B11.0 Safety of Machinery, General Requirements, and Risk Assessment

ANSI B11.19 Performance Criteria for Safeguarding

NFPA 79 Electrical Standard for Industrial Machinery

## International/European Standards

EN ISO 12100 Safety of Machinery – General Principles for Design — Risk Assessment and Risk Reduction

ISO 13850 (EN 418) Emergency Stop Devices, Functional Aspects – Principles for Design

IEC 62061 Functional Safety of Safety-Related Electrical, Electronic and Programmable Control Systems

EN ISO 13849-1:2015 Safety-Related Parts of Control Systems

IEC/EN 60204-1 Electrical Equipment of Machines Part 1: General Requirements

EN 60947-1 Low Voltage Switchgear – General Rules

EN 60947-5-1 Low Voltage Switchgear – Electromechanical Control Circuit Devices

EN 60947-5-5 Low Voltage Switchgear – Electrical Emergency Stop Device with Mechanical Latching Function

## EU/UK Declaration of Conformity (DoC)

Banner Engineering Corp. herewith declares that these products are in conformity with the provisions of the listed directives and all essential health and safety requirements have been met. For the complete DoC, please go to www.bannerengineering.com.

| Product | Directive |
|---|---|
| SSA-EB1PLxx-02ED1Q5xx Series Emergency Stop Button | EU: Machinery Directive 2006/42/EC |
| | UKCA: Machinery (Safety) Regulation 2008 |

Representative in EU: Spiros Lachandidis, Managing Director, **Banner Engineering BV** Park Lane, Culliganlaan 2F bus 3, 1831 Diegem, BELGIUM

Representative in UK: Tony Coghlan, Managing Director, **Turck Banner LTD** Blenheim House, Blenheim Court, Wickford, Essex SS11 8YT, Great Britain

## Banner Engineering Corp Limited Warranty

Banner Engineering Corp. warrants its products to be free from defects in material and workmanship for one year following the date of shipment. Banner Engineering Corp. will repair or replace, free of charge, any product of its manufacture which, at the time it is returned to the factory, is found to have been defective during the warranty period. This warranty does not cover damage or liability for misuse, abuse, or the improper application or installation of the Banner product.

**THIS LIMITED WARRANTY IS EXCLUSIVE AND IN LIEU OF ALL OTHER WARRANTIES WHETHER EXPRESS OR IMPLIED (INCLUDING, WITHOUT LIMITATION, ANY WARRANTY OF MERCHANTABILITY OR FITNESS FOR A PARTICULAR PURPOSE), AND WHETHER ARISING UNDER COURSE OF PERFORMANCE, COURSE OF DEALING OR TRADE USAGE.**


© Banner Engineering Corp.

This Warranty is exclusive and limited to repair or, at the discretion of Banner Engineering Corp., replacement. **IN NO EVENT SHALL BANNER ENGINEERING CORP. BE LIABLE TO BUYER OR ANY OTHER PERSON OR ENTITY FOR ANY EXTRA COSTS, EXPENSES, LOSSES, LOSS OF PROFITS, OR ANY INCIDENTAL, CONSEQUENTIAL OR SPECIAL DAMAGES RESULTING FROM ANY PRODUCT DEFECT OR FROM THE USE OR INABILITY TO USE THE PRODUCT, WHETHER ARISING IN CONTRACT OR WARRANTY, STATUTE, TORT, STRICT LIABILITY, NEGLIGENCE, OR OTHERWISE.**

Banner Engineering Corp. reserves the right to change, modify or improve the design of the product without assuming any obligations or liabilities relating to any product previously manufactured by Banner Engineering Corp. Any misuse, abuse, or improper application or installation of this product or use of the product for personal protection applications when the product is identified as not intended for such purposes will void the product warranty. Any modifications to this product without prior express approval by Banner Engineering Corp will void the product warranties. All specifications published in this document are subject to change; Banner reserves the right to modify product specifications or update documentation at any time. Specifications and product information in English supersede that which is provided in any other language. For the most recent version of any documentation, refer to: www.bannerengineering.com.

For patent information, see www.bannerengineering.com/patents.


© Banner Engineering Corp.