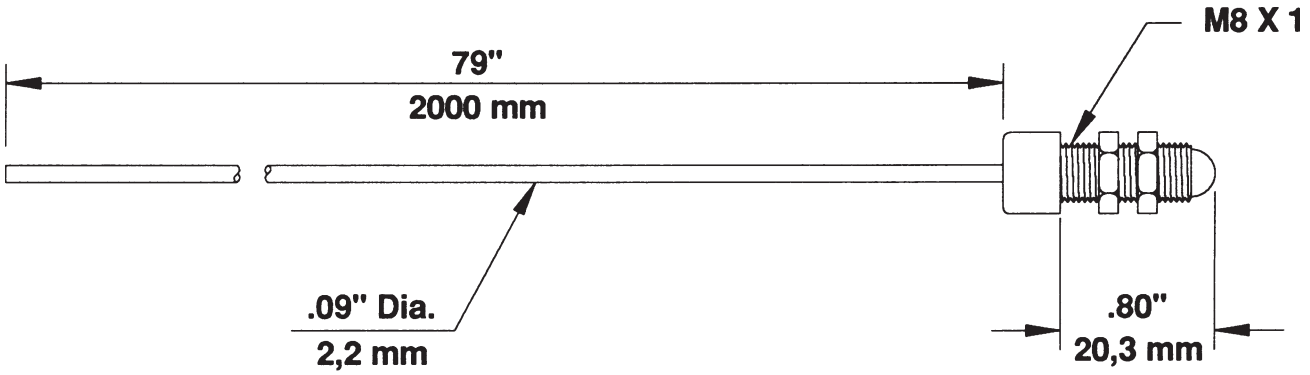

PIL46U*

Plastic Fiber Optic Cable

*PIL4xU; x = fiber length in feet.
Model PIL46U is standard length (6 feet).

Specifications, model PIL46U

OPERATING RANGE: refer to specifications for the sensor to be used with this fiberoptic assembly

OPERATING TEMPERATURE: -30 to +70 degrees C (-20 to +158 F)

CONSTRUCTION: plastic monofilament optical fiber, black polyethylene protective jacket; acrylic lens, black polyester nut and mounting nuts

MINIMUM BEND RADIUS: 1.0".

REPEAT BENDING/FLEXING: life expectancy of fiberoptic cable is in excess of one million cycles, assuming a bend radius no less than the minimum (stated above) and a bend of 90 degrees or less. Avoid stress at the points where the cable enters the sensor ("control end") and the sensing end tip ("sensing end"). Coiled plastic fiberoptic assemblies are recommended for any application requiring reciprocating fiber motion (e.g. model PIT46UC).

CHEMICAL RESISTANCE: the acrylic core of the monofilament optical fiber and the acrylic lens will be damaged by contact with acids, strong bases (alkalis), and solvents. The polyethylene jacket will protect the optical fiber from most chemical environments; however, materials may migrate through the jacket with long term exposure. Samples of fiberoptic material are available for testing and evaluation. The polyester nuts will be damaged by contact with strong bases (alkalis) and solvents.

TEMPERATURE EXTREMES: temperatures below -30 degrees C (-20F) will cause embrittlement of the plastic materials but will not cause transmission loss. Temperatures above +70 degrees C (+158F) will cause both transmission loss and fiber shrinkage.

Cutting plastic fibers

This Banner plastic fiber is designed to be cut by the customer to the length required for the particular application. To facilitate cutting, a Banner model PFC-2 cutting device (illustrated) is supplied with this fiber. Refer to the illustration and cut the fiber as follows:

1) Locate the "control end" of the fiber (the unfinished end). Determine the length of fiber required for the application. Lift the top (blade) of the cutter to open the cutting ports. Insert the control end of the fiber through one of the four *large* cutting ports on the PFC-2 cutter so that the excess fiber protrudes from the back of the cutter.

2) When you are certain you have the desired length, close the cutter until the fiber is cut.

3) Gently wipe the cut ends of the fiber with a clean, dry cloth to remove any contamination. *Do not use solvents or abrasives on any exposed optical fiber. Do not use a cutting port more than once (the blade may tend to dull after one cut).*

PFC-2 Cutting Device



ISO9002 DOCUMENTED QUALITY

BANNER the photoelectric specialist

WARRANTY: Banner Engineering Corporation warrants its products to be free of defects for a period of one year. Banner Engineering Corporation will repair or replace, free of charge, any product of its manufacture found to be defective at the time it is returned to the factory during the warranty period. This warranty does not cover damage or liability for the improper application of Banner products. This warranty is in lieu of any other warranty either expressed or implied.

Printed in USA

P/N 34081

ПРОМЭЛЕКТРОНИКА/ sales@prom-elec.com

Attaching Banner plastic fibers to MINI-BEAM and ECONO-BEAM sensors

1) First, cut the fibers to the proper length. Slip the bushings onto the control ends of the fibers until the fibers extend through about .25".

2) Slide the fibers with the bushings into the ports on the face of the sensor until the fibers stop. While holding the fibers in this position, slide the bushings farther into the ports until they seat up against the face of the sensor. Hold the fibers and bushings in this position.

3) While holding the fibers and bushings against the face of the sensor, tighten the clamp screw to secure the fibers and bushings in place.

NOTE: The drawing at the right shows a MINI-BEAM sensor. The fiber attachment procedure for ECONO-BEAM sensors is the same.

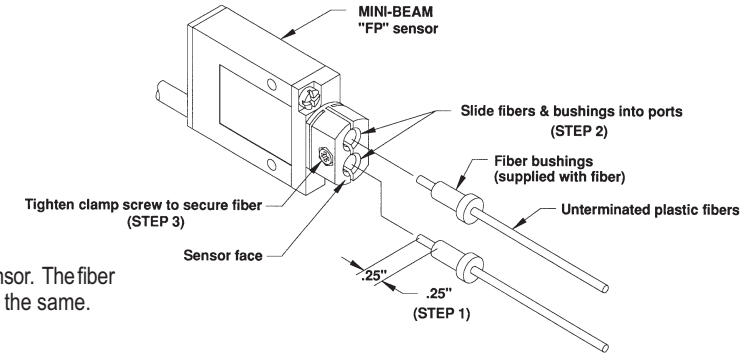

Attaching Banner plastic fibers to OMNI-BEAM, MAXI-BEAM, and VALU-BEAM sensors

1) First, cut the fibers to the proper length. Slip the bushings onto the control end of the fibers until the fiber ends are flush with the small end of the bushings.

2) While holding the bushings to the fibers, slide the fibers and bushings (supplied with the fiber) into the ports on the face of the sensor until the bushings stop. Grip the fibers gently but firmly, and push the fibers one inch further into the fiber ports (note: it may be easier to do this "one fiber at a time"). You will feel two "zones" of resistance over this one inch of travel: the first as the fiber slips through an o-ring seal, and the second as it slips through a friction fitting. Stop pushing when you feel the fibers "seat up" against the inner end of the port.

3) While holding the fibers and bushings against the face of the sensor, tighten the clamp screw to secure the fibers and bushings in place.

IMPORTANT NOTE: If it should ever become necessary to remove a fiber end from the sensor, proceed as follows. First loosen the clamp screw. Then, while holding the bushing firmly in place (so that it cannot move), gently pull the fiber end out of the sensor and through the bushing. To re-install the fiber end, follow steps 1 through 3.

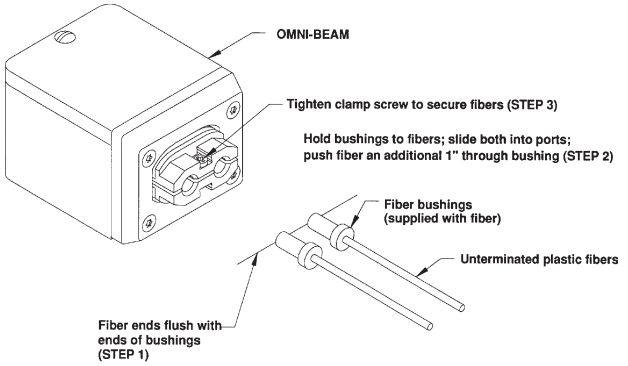

BANNER PLASTIC FIBER OPTIC CABLE MODEL NUMBERING SCHEME

The following is an explanation of the numbering scheme used to specify Banner plastic fibers. The example is for model PBP46UC.

P B P 4 6 U C

PLASTIC FIBER FAMILY
designator (same for all plastic fibers)

STYLE designator:
I = individual fiber
B = bifurcated fiber

SENSING END designator:
U = unterminated
F = ferruled
T = threaded
A = angled
P = 3.5" probe
L = Lensed

CORE FIBER DIAMETER designator:
2 = .020" (0,5mm)
4 = .040" (1,0mm)

FIBER LENGTH designator:
6 = 6 ft.
(standard length)

CONTROL END designator
(describes end of fiber which attaches to the sensor):
U = unterminated*
UC = coiled cable

*Plastic fibers having the letter "U" in the suffix of their model numbers have unterminated control ends, and may be cut by the customer to the required length. Use cutters supplied with fiberoptic cable.

Banner Engineering Corp. 9714 Tenth Ave. No. Minneapolis, MN 55441 Telephone: (612) 544-3164 FAX (applications): (612) 544-3573