PS24-1 and PS115-1 Sensor Interface Power Supplies

Datasheet



Optional mounts, plastic housing and brackets included.

- Low-cost interface between ac power supply and dc-operated sensors
- Power supply can source up to 100 milliamps
- Integral TEACH push button and remote TEACH function available on all models
- Integral SPDT relay isolates dc sensor output for ac applications
- LED indicators for Power ON and Output Active
- Easy-to-adjust 45° screw terminals for all electrical wiring
- Multiple mounting configurations using supplied hardware
- BENC-L enclosure available for NEMA 4X / IP55 applications
- Use a sinking (NPN) interface module model with an NPN-output sensor, and a sourcing (PNP) interface module model with a PNP-output sensor.

Models	Input	Output	Relay Input
PS24-1N	21 to 27V ac, 50/60 Hz	100 mA	Sinking (NPN)
PS24-1P			Sourcing (PNP)
PS115-1N	105 to 130V ac, 50/60 Hz		Sinking (NPN)
PS115-1P			Sourcing (PNP)

A sinking (NPN) interface module model must be used with an NPN-output sensor, and a sourcing (PNP) interface module model must be used with a PNP-output sensor.

Overview

This interface module combines the functions of a power supply, a TEACH button, and an SPDT relay to economically interface dc-operated sensors for ac applications. The interface accepts either a 24V ac or 115V ac power supply, depending on the model. It uses a transformer to isolate the input power supply from the dc sensor. The transformer output voltage is rectified and filtered to supply up to 100 milliamps to run dc sensors.

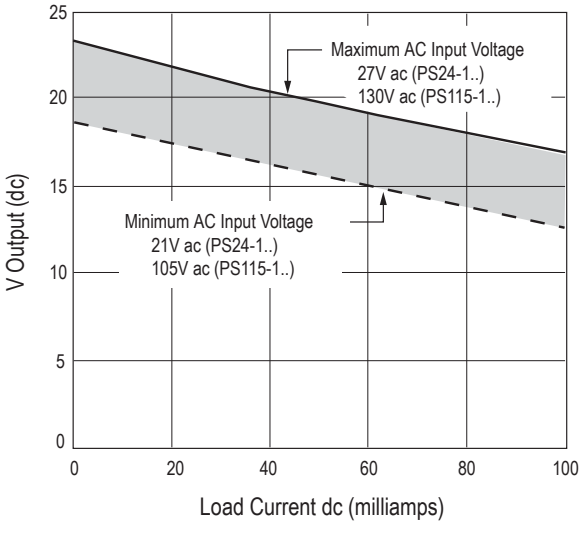

NOTE: Ripple voltage is less than 1.2V at 100 mA load

An integral TEACH button can be used to activate the TEACH functions of a Banner Expert™ sensor. Remote TEACH capability also is available on all models (refer to hookup diagrams and sensor literature).

The SPDT relay is controlled via the relay coil input. A dc sensor output (either sinking or sourcing, depending on interface module model) can be tied to the relay coil input. The module's amber LED is ON when the sensor output is active. The module's green LED is used as a power indicator.

For sensor supply voltage and current requirements, refer to the chart.

P/N 123566 Rev. C

9 Oct 2013

ПРОМЭЛЕКТРОНИКА/ sales@prom-elec.com

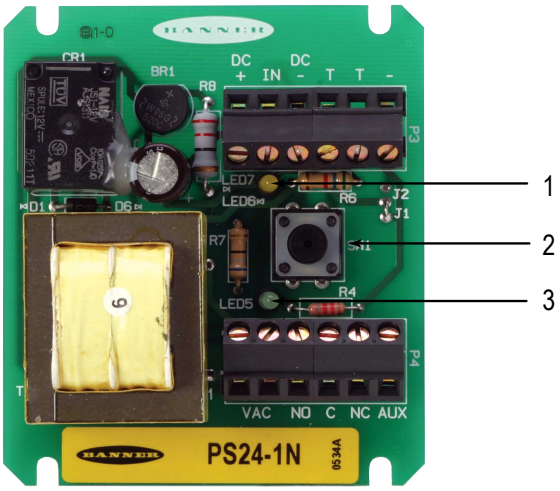

1. Output Indicator LED (amber)
2. TEACH button
3. Power Indicator LED (green)

Installing the PS24-1 or PS115-1 Power Supply

The module must be isolated from conductive surfaces. It may be installed in a user-supplied housing using the four slots in the board's corners, or it may be inserted into the supplied plastic housing.

When you use the supplied housing, either insert the two DIN clips into the grooves on the housing's underside and add the two end caps (shown), or install only the end caps and use the screw-holes in the end caps for mounting to a flat surface. Screws are provided for attaching the end caps to the housing.

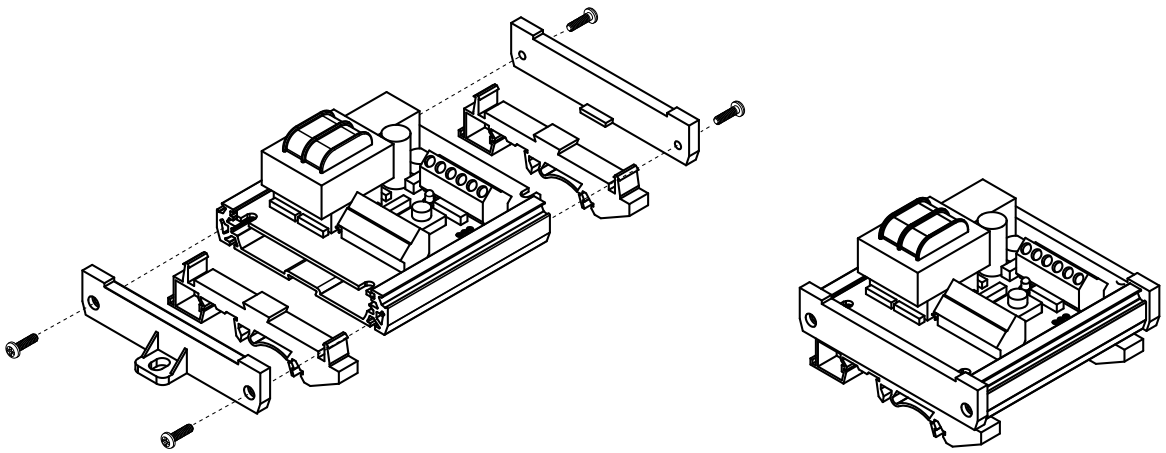

Specifications

Input Supply Voltage
PS24-1: 21–27V ac, 47/63 Hz
PS115-1: 105–130V ac, 47/63 Hz

Voltage and Current Output Rating
100 mA, exclusive of relay coil input; see load curves

Relay Input Voltage Range
12–30V dc

Relay Input Resistance
470 ohms ±10%

Indicators
Green LED: Power applied
Amber LED: Relay coil energized (output active)

Construction
Circuit board is shipped separate from housing. Plastic housing, end caps and DIN rail mounting hardware are supplied for user assembly.

Connections
Screw-clamp terminal block accepts 12–24 gauge wire

Relay Output Rating
SPDT Relay
Maximum Switched Power: 150W, 1200VA
Maximum Switched Current: 5A (resistive load)
Maximum Switched Voltage: 30V dc, 250V ac
Minimum Current and Voltage: 10 mA at 5V dc
Mechanical Life: 10,000,000 operations
Electrical Life: 100,000 operations at full load

Relay Response Time
10 milliseconds

Adjustments
TEACH button

Environmental Rating
IP00; use BENC-L enclosure for NEMA 4X / IP55 rating.

Operating Conditions
Temperature: –40 to 70 °C (–40 to 158 °F)
Max. Relative Humidity: 90% at 50 °C (122 °F) (non-condensing)

Certifications
CSA and UL approvals pending

Dimensions

Module

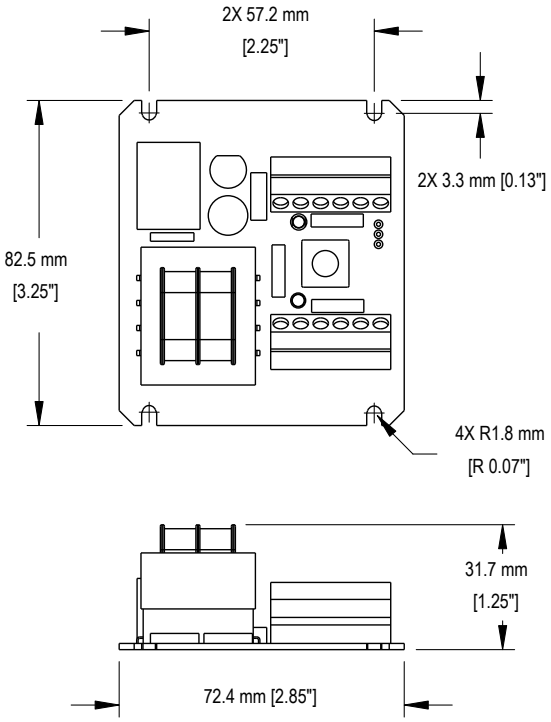

With Plastic Housing Assembly

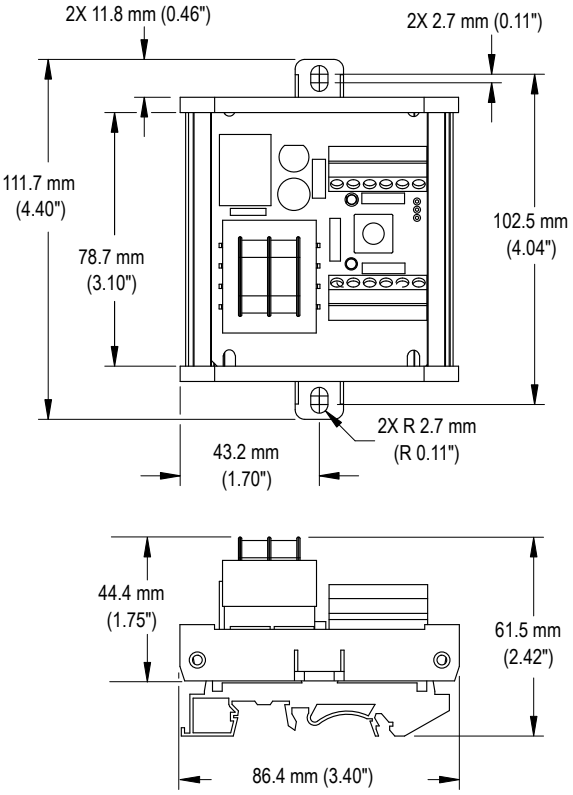

Hookup Diagrams

PNP Input	NPN Input

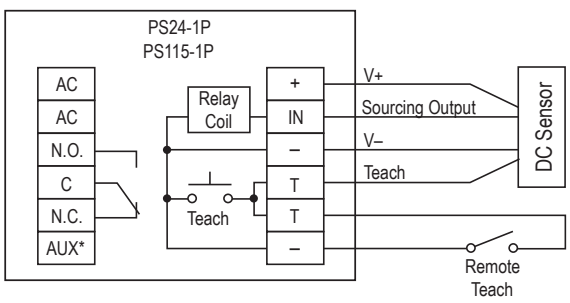

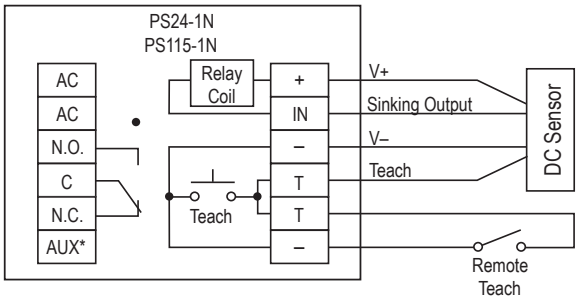

* AUX is an electrically isolated terminal.

Accessories

BENC-L

- Corrosion-resistant plastic enclosure with clear polycarbonate cover to protect module
- Rated NEMA 4X, IP55
- Includes o-ring and 4 each: 1/4"-20x30 and #8 self-tapping screws
- Temperature rating –40 to 70 °C (–40 to 158 °F)

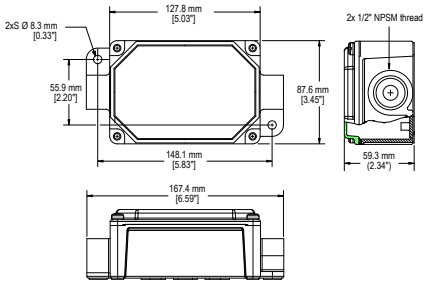

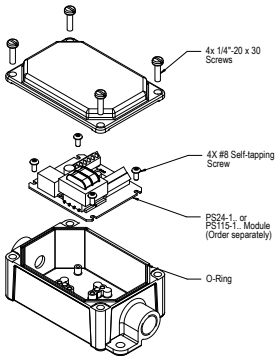

Banner Engineering Corp Limited Warranty

Banner Engineering Corp. warrants its products to be free from defects in material and workmanship for one year following the date of shipment. Banner Engineering Corp. will repair or replace, free of charge, any product of its manufacture which, at the time it is returned to the factory, is found to have been defective during the warranty period. This warranty does not cover damage or liability for misuse, abuse, or the improper application or installation of the Banner product.

THIS LIMITED WARRANTY IS EXCLUSIVE AND IN LIEU OF ALL OTHER WARRANTIES WHETHER EXPRESS OR IMPLIED (INCLUDING, WITHOUT LIMITATION, ANY WARRANTY OF MERCHANTABILITY OR FITNESS FOR A PARTICULAR PURPOSE), AND WHETHER ARISING UNDER COURSE OF PERFORMANCE, COURSE OF DEALING OR TRADE USAGE.

This Warranty is exclusive and limited to repair or, at the discretion of Banner Engineering Corp., replacement. IN NO EVENT SHALL BANNER ENGINEERING CORP. BE LIABLE TO BUYER OR ANY OTHER PERSON OR ENTITY FOR ANY EXTRA COSTS, EXPENSES, LOSSES, LOSS OF PROFITS, OR ANY INCIDENTAL, CONSEQUENTIAL OR SPECIAL DAMAGES RESULTING FROM ANY PRODUCT DEFECT OR FROM THE USE OR INABILITY TO USE THE PRODUCT, WHETHER ARISING IN CONTRACT OR WARRANTY, STATUTE, TORT, STRICT LIABILITY, NEGLIGENCE, OR OTHERWISE.

Banner Engineering Corp. reserves the right to change, modify or improve the design of the product without assuming any obligations or liabilities relating to any product previously manufactured by Banner Engineering Corp.