EZSS Series Snap-On Lens Shields

For use with EZ-SCREEN® Type 4 Emitters and Receivers



Features

- Provides impact protection for EZ-SCREEN 14 mm and 30 mm resolution emitters and receivers
- Clear PETG co-polyester lens shields snap into place; need no foam gasket for attachment
- Can be removed and reinstalled easily
- Foam gasket (neoprene sponge) included to prevent debris from falling between lens shield and sensor window
- Reduces sensing range by approximately 10% per shield (20% per pair)

Models

Lens Shield Model	Fits Emitter/Receiver Models	Lens Shield Overall Length
EZSS-150	**SLS..-150..**	236 mm
EZSS-300	**SLS..-300..**	346 mm
EZSS-450	**SLS..-550..**	496 mm
EZSS-600	**SLS..-600..**	645 mm
EZSS-750	**SLS..-750..**	795 mm
EZSS-900	**SLS..-900..**	945 mm
EZSS-1050	**SLS..-1050..**	1094 mm
EZSS-1200	**SLS..-1200..**	1244 mm
EZSS-1350	**SLS..-1350..**	1394 mm
EZSS-1500	**SLS..-1500..**	1543 mm
EZSS-1650	**SLS..-1650..**	1693 mm
EZSS-1800	**SLS..-1800..**	1843 mm

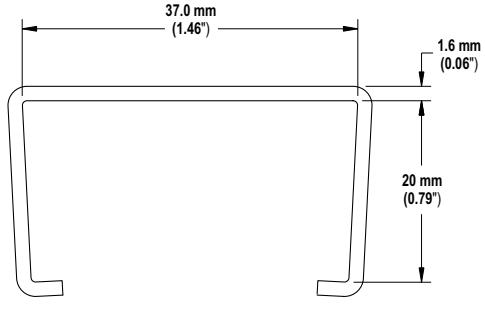

Figure 1. Lens shield dimensions – cross-section

ПРОМЭЛЕКТРОНИКА/ sales@prom-elec.com

EZSS Series Snap-On Lens Shields

Installation

The EZSS series lens shield can be installed either by sliding it over the emitter/receiver housing or by snapping it into place. Sliding it on must be done prior to installing the sensors; snapping it into place can be done after sensor installation. If side brackets are used, notches must be cut into the sides of the shield, before snapping it into place. Each shield is 2 mm longer than the sensor housing section; it will overlap the blind end-cap by 2 mm.

To slide the shield onto the housing:

1. Remove the protective film from both the inside and outside surfaces of the shield. (NOTE: Take care; the shield's cut edges may be sharp.)
2. If desired, install gasket across one end of the shield; this gasket should be positioned at the top edge of the sensor (whether the QD end is mounted up or down).
3. Carefully slide the shield onto the housing from the blind-end-cap end, aligning the shield's tabs in the sensor's T-nut slot, until the edge of the shield touches the edge of the far end cap.
4. If the gasket shifted its position during step 3, press it into place and install sensor.
5. Perform the trip test with the lens shield in place, before using system.

To snap the shield onto the housing:

1. Remove the protective film from both the inside and outside surfaces of the shield. (NOTE: Take care; the shield's cut edges may be sharp.)
2. If desired, install gasket across one end of the shield; this gasket should be positioned at the top edge of the sensor (whether the QD end is mounted up or down).
3. Holding the end of the shield to be located at the cabled end of the sensor, spread the sides of the shield apart. Butt the edge of the shield up to the edge of the cabled end cap and ease the sides of the shield around the housing, until the tabs are in the sensor's T-nut slots. From that end, gradually press the rest of the shield into place.
4. Perform the trip test with the lens shield in place, before using system.

Banner Engineering Corp. • Minneapolis, MN U.S.A.
www.bannerengineering.com • Tel: 763.544.3164

WARNING . . .

Avoid Installation Near Reflective Surfaces

Avoid locating the defined area near a reflective surface; it could reflect sensing beam(s) around an object or person within the defined area, and prevent its detection by the EZ-SCREEN System. Perform the trip test, as described in Section 3.4.4 of the EZ-SCREEN Instruction Manual, to detect such reflection(s) and the resultant optical short circuit.

Failure to prevent reflection problems will result in incomplete guarding and could result in serious bodily injury or death.

Adjacent Reflective Surfaces

Use of the EZSS series lens shield may increase the distance "d" shown in Figure 2 below. The surface of the shield may increase the potential angle of the beams from that shown in the figure (without the shield in place). **It is important to perform the trip test with the lens shield in place.** If the trip test indicates an optical short circuit, refer to the EZ-SCREEN Instruction Manual, Section 3.1.6 for information on eliminating problem reflections.

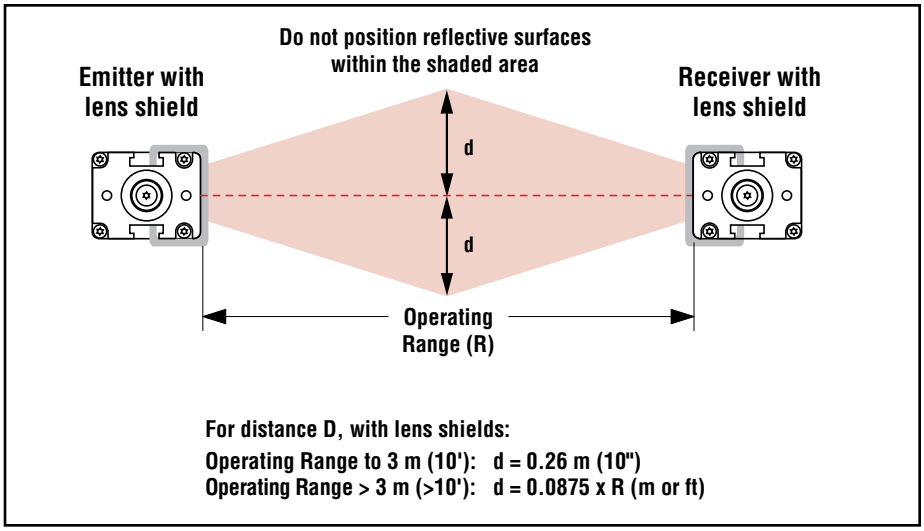

Figure 2. Adjacent reflective surfaces

Maintenance

To prevent loss of excess gain, the shields should be cleaned when they become dirty. Remove dirt and/or oil from the front face of the shield using a mild detergent or window cleaner and a soft cloth. Avoid industrial cleaning agents or cleaning agents containing alcohol, as they may damage the polycarbonate shield material.

Replacement

The shield should be replaced when it becomes pitted or scratched, or excess gain will be decreased.

Banner Engineering Corp Limited Warranty

Banner Engineering Corp. warrants its products to be free from defects in material and workmanship for one year following the date of shipment. Banner Engineering Corp. will repair or replace, free of charge, any product of its manufacture which, at the time it is returned to the factory, is found to have been defective during the warranty period.This warranty does not cover damage or liability for misuse, abuse, or the improper application or installation of the Banner product.

THIS LIMITED WARRANTY IS EXCLUSIVE AND IN LIEU OF ALL OTHER WARRANTIES WHETHER EXPRESS OR IMPLIED (INCLUDING, WITHOUT LIMITATION, ANY WARRANTY OF MERCHANTABILITY OR FITNESS FOR A PARTICULAR PURPOSE), AND WHETHER ARISING UNDER COURSE OF PERFORMANCE, COURSE OF DEALING OR TRADE USAGE.

This Warranty is exclusive and limited to repair or, at the discretion of Banner Engineering Corp., replacement. **IN NO EVENT SHALL BANNER ENGINEERING CORP. BE LIABLE TO BUYER OR ANY OTHER PERSON OR ENTITY FOR ANY EXTRA COSTS, EXPENSES, LOSSES, LOSS OF PROFITS, OR ANY INCIDENTAL, CONSEQUENTIAL OR SPECIAL DAMAGES RESULTING FROM ANY PRODUCT DEFECT OR FROM THE USE OR INABILITY TO USE THE PRODUCT, WHETHER ARISING IN CONTRACT OR WARRANTY, STATUTE, TORT, STRICT LIABILITY, NEGLIGENCE, OR OTHERWISE.**

Banner Engineering Corp. reserves the right to change, modify or improve the design of the product without assuming any obligations or liabilities relating to any product previously manufactured by Banner Engineering Corp.

P/N 127944 rev. B

Banner Engineering Corp., 9714 Tenth Ave. No., Minneapolis, MN 55441 • Phone: 763.544.3164 • www.bannerengineering.com • Email: sensors@bannerengineering.com