TABLE OF LENGTHS			
P/N	MODEL NO.	"L1" (m)	"L2" (m)
810504	CSE5A-M125M125	0.30	0.30

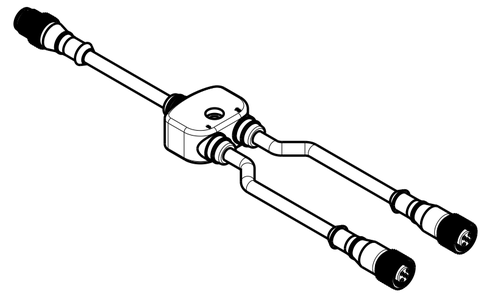

ISOMETRIC VIEW
SCALE 1:2

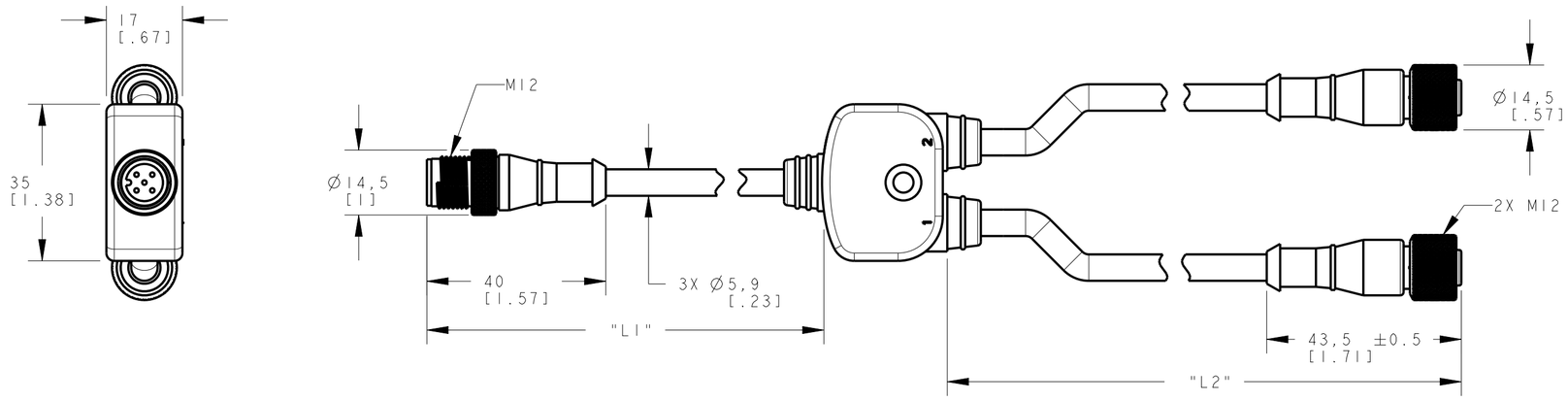

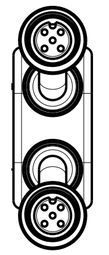

NOTES:
1. ALL DIMENSIONS ARE MILLIMETERS [INCHES] UNLESS OTHERWISE NOTED.
2. REFER TO "www.bannerengineering.com" FOR ADDITIONAL DATA AND SPECIFICATIONS.

This drawing is the property of BANNER ENGINEERING CORP. Any use or reproduction, in any form, without prior written permission of Banner is prohibited.
© 2015 Banner Engineering Corp.

THIRD ANGLE PROJECTION

BANNER ENGINEERING CORP.
www.bannerengineering.com

TITLE
CSE5A-M125XM125X

SIZE	DRAWING NO.	REV.
C	220987	A
SCALE 1:1	SHEET 1 OF 1	

CREO

ПРОМЭЛЕКТРОНИКА/ sales@prom-elec.com