MODEL NO.	"L"	P/N
PBF250U	15240 [600]	74203
PBF230U	10000 [394]	74135
PBF21U	305 [12]	56111
PBF26U	2000 [79]	28131

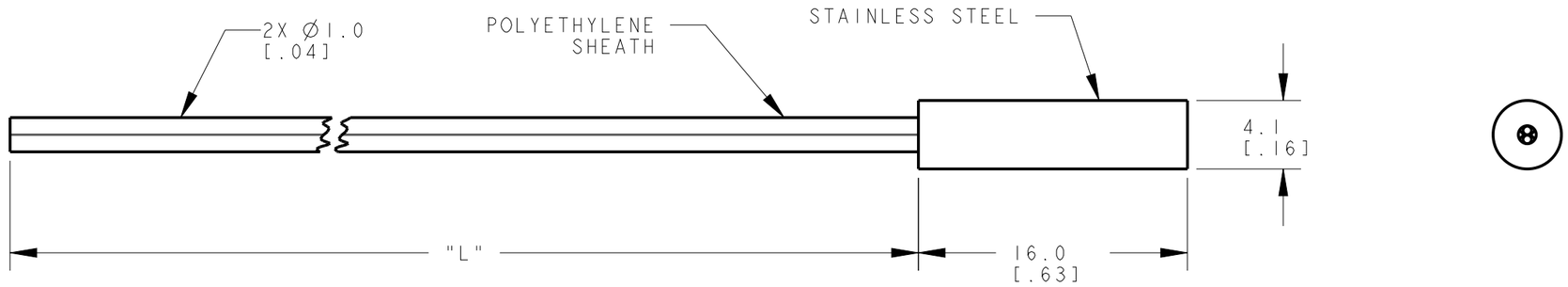

NOTES:
1. ALL DIMENSIONS ARE MILLIMETERS [INCHES] UNLESS OTHERWISE NOTED.
2. REFER TO "www.bannerengineering.com" FOR ADDITIONAL DATA AND SPECIFICATIONS.

A UPDATED DRAWING TO MILLIMETERS OVER INCHES 8-5-99 JBC

This drawing is the property of BANNER ENGINEERING CORP. Any use or reproduction, in any form, without prior written permission of Banner is prohibited.
© 2015 Banner Engineering Corp.

THIRD ANGLE PROJECTION

BANNER ENGINEERING CORP.
www.bannerengineering.com

TITLE

PBF2 SERIES UNTERMINATED

SIZE	DRAWING NO.	REV.
B	188698	A
SCALE 3:1	SHEET 1 OF 1	

CREO

ПРОМЭЛЕКТРОНИКА/ sales@prom-elec.com