TABLE 1						
P/N	MODEL NO.	"L1"	"L2"	"L3"	"LABEL"	"COIL"
47104	MQDC-406RA	2000 +50/-0	57.7 ±6.35	6.9 ±3.18	150mm	80mm
26848	MQDC-415RA	5000 +150/-0	57.7 ±6.35	6.9 ±3.18	150mm	80mm
10861	MQDC-415RA-10861	5000 +150/-0	305 ±5.00	6.9 ±3.18	150mm	80mm
30341	MQDC-420RA	6000 +150/-0	57.7 ±6.35	6.9 ±3.18	150mm	80mm
27080	MQDC-430RA	9000 +250/-0	57.7 ±6.35	6.9 ±3.18	150mm	80mm
10872	MQDC-430RA-10872	9000 +250/-0	305 ±5.00	6.9 ±3.18	150mm	80mm
13231	MQDC-440RA	12200 +250/-0	57.7 ±6.35	6.9 ±3.18	150mm	230mm
49213	MQDC-450RA	15000 +300/-0	57.7 ±6.35	6.9 ±3.18	150mm	230mm
86055	MQDC-460RA	18300 +250/-0	57.7 ±6.35	6.9 ±3.18	150mm	230mm
73720	MQDC-470RA	22000 +300/-0	57.7 ±6.35	6.9 ±3.18	150mm	230mm
13237	MQDC-475RA	23000 +250/-0	57.7 ±6.35	6.9 ±3.18	150mm	230mm
65559	MQDC-4100RA	31000 +450/-0	57.7 ±6.35	6.9 ±3.18	150mm	230mm
18046	MQDC-4170RA	52000 +450/-0	57.7 ±6.35	6.9 ±3.18	150mm	230mm
807055	MQDC-4200RA	61000 +450/-0	57.7 ±6.35	6.9 ±3.18	150mm	230mm
808720	MQDC-4130RA	40000 +450/-0	57.7 ±6.35	6.9 ±3.18	150mm	230mm

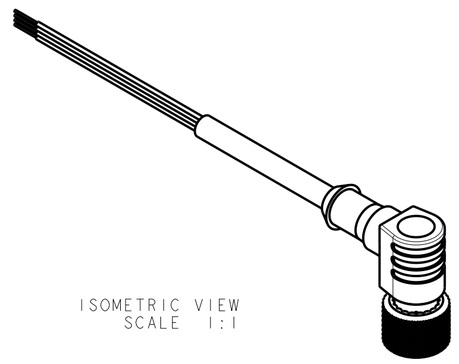

ISOMETRIC VIEW
SCALE 1:1

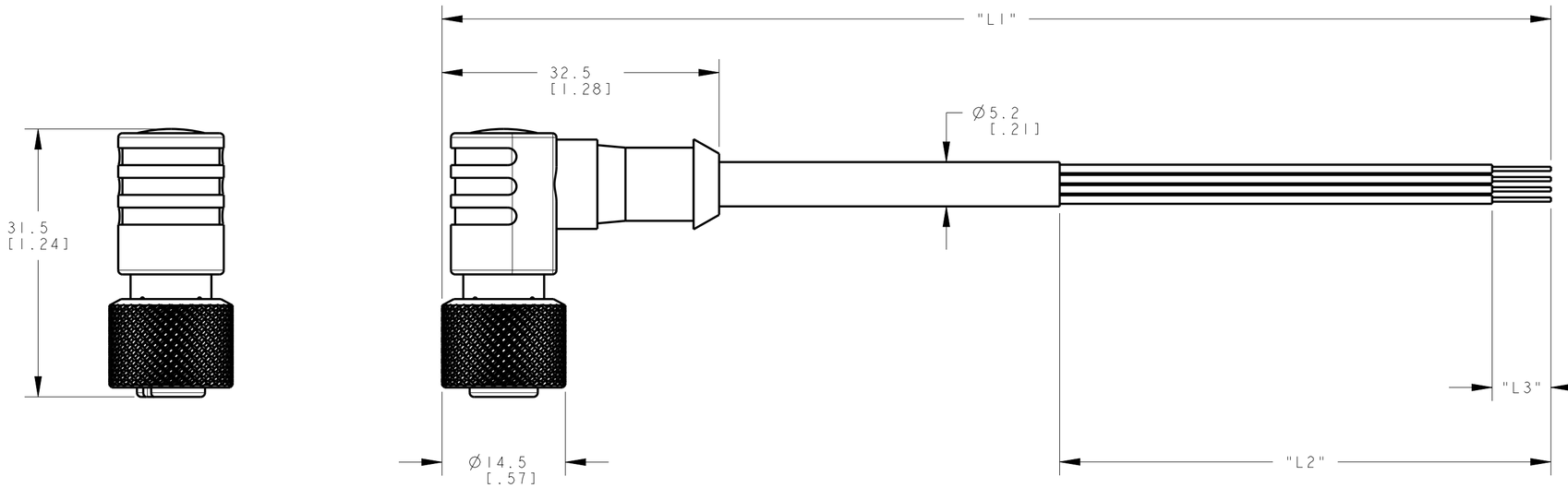

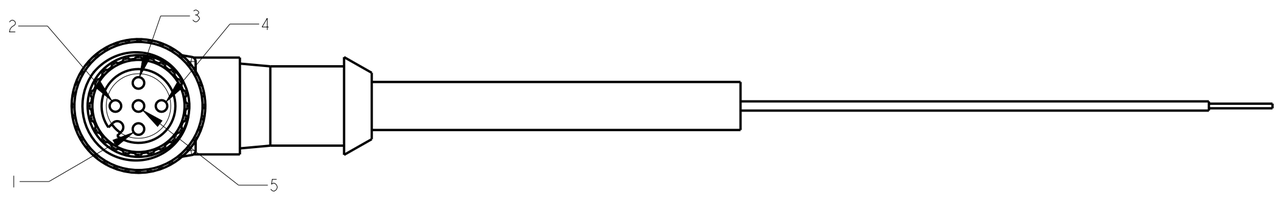

FEMALE POLES
1. BROWN
2. WHITE
3. BLUE
4. BLACK
5. (UNUSED)

NOTES:
1. ALL DIMENSIONS ARE MILLIMETERS [INCHES] UNLESS OTHERWISE NOTED.
2. REFER TO "www.bannerengineering.com" FOR ADDITIONAL DATA AND SPECIFICATIONS.

This drawing is the property of BANNER ENGINEERING CORP. Any use or reproduction, in any form, without prior written permission of Banner is prohibited.
© 2015 Banner Engineering Corp.

THIRD ANGLE PROJECTION

BANNER ENGINEERING CORP.
www.bannerengineering.com

TITLE
MQDC-4XXXRA

SIZE	DRAWING NO.	REV.
C	214717	A
SCALE 2:1	SHEET 1 OF 1	

CREO

ПРОМЭЛЕКТРОНИКА/ sales@prom-elec.com