BANNER
more sensors, more solutions

EZ-LIGHT™ TL70 Series

Special Products Model **B-TL70-Q2PMA**



Modifications

- Custom 2 Euro PUR pigtails.
- For further information see standard literature; 182215
- Derived from model B-TL70-QP5, p/n 92228.
- This product has been modified from the standard product, for further information, contact the Applications Department at (763) 544-3164.

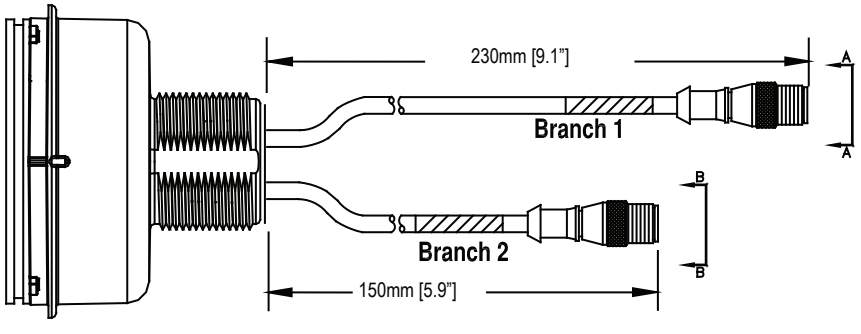

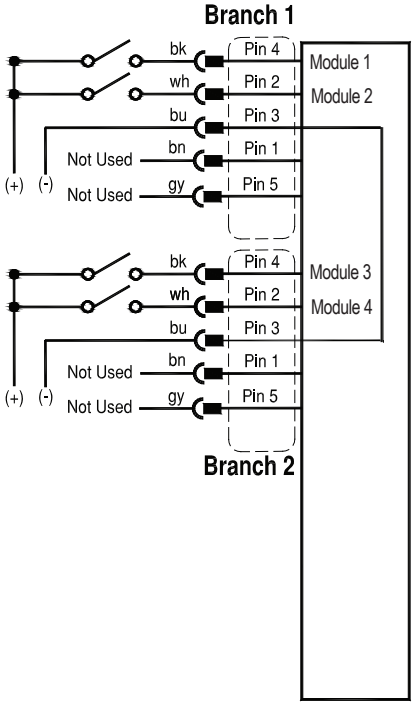

For further information, contact the Applications Engineering Department at (763) 544-3164.

⚠ WARNING . . . Not To Be Used for Personnel Protection

Never use these products as sensing devices for personnel protection. Doing so could lead to serious injury or death.

These sensors do NOT include the self-checking redundant circuitry necessary to allow their use in personnel safety applications. A sensor failure or malfunction can cause either an energized or de-energized sensor output condition. Consult your current Banner Safety Products catalog for safety products which meet OSHA, ANSI and IEC standards for personnel protection.

186849

Printed in USA 05/07/15 Rev. A

ПРОМЭЛЕКТРОНИКА/ sales@prom-elec.com