SSA-EB1xxED1Q Series Emergency Stop Push Buttons Product Manual

Features

Non-Illuminated Flush Mount Electro-Mechanical Push Buttons

- Rugged design; easy installation with no assembly or individual wiring required
- Push-to-stop, twist-to-release (all models), or pull-to-release (standard and large) operation per IEC 60947-5-5
- Latching design complies with ISO 13850; direct (positive) opening operation per EN 60947-5-1
- Compliant with ANSI B11.19, NFPA 79, and IEC/EN 60204-1 Emergency Stop requirements
- “Safe Break Action” ensures normally closed (NC) contacts will open if the contact block is separated from the actuator
- 4-, 5-, or 8-pin M12 quick disconnect
- Model available with red LED indication of actuation in button (depressed/latched)
- Models designed to interface with Safety BUS nodes/gateways
- "Emergency Stop" legend included



SSA-EB… series models are "mushroom-style" electro-mechanical emergency stop push buttons. When the button is armed, the switch's safety contacts (normally closed/NC) are closed and its monitoring contacts (normally open/NO), if present, are open. When the button is pushed, the switch's safety contacts open, and the monitoring contacts close. The contacts remain in this condition until the push button is manually rearmed by twisting clockwise the red push button actuator, or by pulling on the models with the standard actuator.

The SSA-EB1 Series Emergency Stop Button series has a flat mounting base for ease of mounting without requiring an additional enclosure. The illuminated models provide a red indication in the face of the button that allows for easy identification of a pushed/actuated button.

SSA-EB1M… series padlock-style lockable emergency stop push buttons are intended to prevent unauthorized or accidental resetting of a pushed/latched button. The SSA-EB1M… series are not to be used as an energy isolating device or as the sole means of complying with Lockout/Tagout or with the requirements of the isolation of hazardous energy (see OSHA 29CFR1910.147, ANSI Z244.1, CSA Z460, ISO 14118). The locking feature can be used to provide supervisory/personal control and provide an additional safety measure(s) to reduce the likelihood of inadvertent arming and energization of the emergency stop circuit.

Models

Non-Illuminated Models

Model	Push Button	E-Stop Contacts	Connection
SSA-EB1P-02ED1Q4	Standard 40 mm	2 N.C.	4-pin M12 QD
SSA-EB1MP-02ED1Q4	Lockable 44 mm		
SSA-EB1P-02ED1Q4A	Standard 40 mm	2 N.C.	4-pin M12 QD—Alternate pinout
SSA-EB1MP-02ED1Q4A	Lockable 44 mm		
SSA-EB1P-11ED1Q4	Standard 40 mm	1 N.C. / 1 N.O.	4-pin M12 QD
SSA-EB1MP-11ED1Q4	Lockable 44 mm		
SSA-EB1P-02ED1Q5A	Standard 40 mm	2 N.C.	Safety BUS node compatible(1) 5-pin M12 QD CH1 = pins 1 & 2, CH2 = pins 4 & 5
SSA-EB1MP-02ED1Q5A	Lockable 44 mm		
SSA-EB2P-02ED1Q5A	Large 60 mm		
SSA-EB1P-02ED1Q5B	Standard 40 mm	2 N.C.	Safety BUS node compatible(2) 5-pin M12 QD CH1 = pins 1 & 4, CH2 = pins 2 & 5
SSA-EB1MP-02ED1Q5B	Lockable 44 mm		
SSA-EB2P-02ED1Q5B	Large 60 mm		
SSA-EB1P-22ED1Q8	Standard 40 mm	2 N.C. / 2 N.O.	8-pin M12 QD
SSA-EB1MP-22ED1Q8	Lockable 44 mm		
SSA-EB2P-04ED1Q8	Large 60 mm	4 N.C.	8-pin M12 QD

(1) Compatible with AllenBradley ArmorBlock® 1732DS Safe DeviceNet remote I/O
(2) Compatible with Siemens ET 200pro PROFIsafe gateway

Original Instructions
28-Sep-26

© Banner Engineering Corp. All rights reserved.
www.bannerengineering.com

162756
p/n: 162756 Rev. H

ПРОМЭЛЕКТРОНИКА/ sales@prom-elec.com

Illuminated Button Models (face, PUSH ON)

Model	Push Button	E-Stop Contacts	Connection
SSA-EB1PL2-12ED1Q8	Standard 40 mm	2 N.C. / 1 N.O.	8-pin M12 QD
SSA-EB1ML2P-12ED1Q8	Lockable 44 mm		

Important... Read this before proceeding!

The user is responsible for satisfying all local, state, and national laws, rules, codes, and regulations relating to the use of this product and its application. Banner Engineering Corp. has made every effort to provide complete application, installation, operation, and maintenance instructions. Please contact a Banner Applications Engineer with any questions regarding this product.

The user is responsible for making sure that all machine operators, maintenance personnel, electricians, and supervisors are thoroughly familiar with and understand all instructions regarding the installation, maintenance, and use of this product, and with the machinery it controls. The user and any personnel involved with the installation and use of this product must be thoroughly familiar with all applicable standards, some of which are listed within the specifications. Banner Engineering Corp. makes no claim regarding a specific recommendation of any organization, the accuracy or effectiveness of any information provided, or the appropriateness of the provided information for a specific application.

WARNING:
- **Not a safeguarding device**
- Failure to follow these instructions could result in serious injury or death.
- This device is not considered a safeguarding device because it requires an overt action by an individual to stop machine motion or hazards. A safeguarding device limits or eliminates an individual's exposure to a hazard without action by the individual or others. This device cannot be substituted for required safeguarding. Refer to the applicable standards to determine those requirements.

EU Declaration of Conformity (DoC)

Banner Engineering Corp. herewith declares that these products are in conformity with the provisions of the listed directives and all essential health and safety requirements have been met. For the complete DoC, please go to www.bannerengineering.com.

Product	Directive
SSA-EB1 Series Emergency Stop Button	EU: Machinery Directive 2006/42/EC

Representative in EU: Spiros Lachandidis, Managing Director, Banner Engineering BV | Park Lane | Culliganlaan 2F bus 3 | 1831 Diegem, BELGIUM

Emergency Stop Considerations

NFPA 79, ANSI B11.19, IEC/EN 60204-1, and ISO 13850 specify emergency stop requirements, including the following:
- Emergency-stop push buttons shall be located at each operator control station and at other operating stations where emergency shutdown is required.
- Stop and emergency-stop push buttons shall be continuously operable and readily accessible from all control and operating stations where located. Do not mute or bypass E-stop buttons.
- Actuators of emergency-stop devices shall be colored red. The background immediately around the device actuator shall be colored yellow (where possible). The actuator of a push-button-operated device shall be of the palm or mushroom-head type.
- The emergency-stop actuator shall be a self-latching type.

WARNING:
- **Do not mute or bypass any emergency stop device**
- Muting or bypassing the safety outputs renders the emergency stop function ineffective.
- ANSI B11.19, NFPA 79 and IEC/EN 60204-1 require that the emergency stop function remains active at all times.

© Banner Engineering Corp. All rights reserved.
www.bannerengineering.com

WARNING:
- **Connect two or more devices to the same safety module (controller) in series**
- Connecting devices in parallel defeats the switch contact monitoring ability of the module and creates an unsafe condition that could result in serious injury or death.
- Failure to test each device individually in this manner could result in undetected faults and create an unsafe condition that could result in serious injury or death.
- Connect the contacts of the corresponding pole of each switch in series. Never connect the contacts of multiple switches in parallel. Individually actuate (engage) each device, then release (or re-arm) and reset the safety module. This allows the module to check each switch and its wiring to detect faults. Perform this check during the prescribed checkouts.

Installation and Maintenance

The device must not be affected by environmental conditions. **Install the device so that operation is not impeded, but should be protected against inadvertent operation** (for example, accidental actuation by being bumped or leaned against). Do not operate the switch using a tool. Do not expose the switch to excessive shocks and vibrations, otherwise the switch may be deformed or damaged, causing malfunction or operation failure. M5 mounting hardware is included.

Electrical installation must be made by a Qualified Person[3] and must comply with NEC (National Electrical Code), NFPA 79 or IEC/EN 60204-1, and all applicable local standards. It is not possible to give exact wiring instructions for a device that interfaces to a multitude of machine control configurations. The following is general in nature; it is recommended to perform a risk assessment to ensure appropriate application, interfacing/hookup, and risk reduction (see ISO 12100 or ANSI B11.0).

For SSA-EB1M… series padlock-style lockable emergency stop push buttons, make sure that an applicable padlock and hasp is used. The total weight of the padlock and hasp must not exceed 1500 g (3.3 lbs) or the switch may malfunction or fail.

WARNING:
- **Risk of electric shock**
- Use extreme caution to avoid electrical shock. Serious injury or death could result.
- Always disconnect power from the safety system (for example, device, module, interfacing, etc.), guarded machine, and/or the machine being controlled before making any connections or replacing any component. Lockout/tagout procedures might be required. Refer to OSHA 29CFR1910.147, ANSI Z244-1, or the applicable standard for controlling hazardous energy.
- Make no more connections to the device or system than are described in this manual. Electrical installation and wiring must be made by a Qualified Person[4] and must comply with the applicable electrical standards and wiring codes, such as the NEC (National Electrical Code), NFPA 79, or IEC 60204-1, and all applicable local standards and codes.

SSA-EB1xx-02ED1Q4(A) (2 N.C.) and SSA-EB1xx-11ED1Q4 (1 N.C. / 1 N.O.)

Pin	Color	SSA-EB1xx-02ED1Q4		SSA-EB1xx-02ED1Q4A		SSA-EB1xx-11ED1Q4		Pinout
		Function	Contacts	Function	Contacts	Function	Contacts	
1	Brown	CH1b	N.C.	CH1b	N.C.	CH1b	N.C.	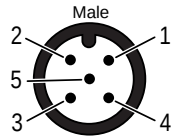
2	White	CH2a	N.C.	CH2a	N.C.	CH2a	N.O.	
3	Blue	Ch2b	N.C.	Ch1a	N.C.	Ch2b	N.O.	
4	Black	CH1a	N.C.	CH2b	N.C.	CH1a	N.C.	
5	n.a.	n.a.		n.a.		n.a.		

SSA-EB1(2)xx-02ED1Q5A (2 N.C.) and SSA-EB1(2)xx-02ED1Q5B (2 N.C.)

Pin	Color	SSA-EB1(2)xx-02ED1Q5A[5]		SSA-EB1(2)xx-02ED1Q5B[6]		Pinout
		Function	Contacts	Function	Contacts	
1	Brown	CH1a	N.C.	CH1b	N.C.	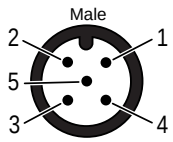
2	White	CH1b	N.C.	CH2a	N.C.	
3	Blue	n.a.				
4	Black	CH2a	N.C.	CH1a	N.C.	

Continued on page 4

[3] A Qualified Person is a person who, by possession of a recognized degree or certificate of professional training, or who, by extensive knowledge, training, and experience, has successfully demonstrated the ability to solve problems relating to the subject matter and work.
[4] A Qualified Person is a person who, by possession of a recognized degree or certificate of professional training, or who, by extensive knowledge, training and experience, has successfully demonstrated the ability to solve problems relating to the subject matter and work.
[5] Compatible with AllenBradley ArmorBlock® 1732DS Safe DeviceNet remote I/O
[6] Compatible with Siemens ET 200pro PROFIsafe gateway

© Banner Engineering Corp. All rights reserved.
www.bannerengineering.com

Continued from page 3

Pin	Color	SSA-EB1(2)xx-02ED1Q5A		SSA-EB1(2)xx-02ED1Q5B		Pinout
		Function	Contacts	Function	Contacts	
5	Gray	CH2b	N.C.	Ch2b	N.C.	

SSA-EB2P-04ECQ8 (4 N.C.) and SSA-EB1xx-22ECQ8 (2 N.C./2 N.O.)

Pin	Color	SSA-EB2P-04ECQ8		SSA-EB1P-22ED1Q8		Pinout
		Function	Contacts	Function	Contacts	
1	White	CH3a	N.C.	AUX1a	N.O.	
2	Brown	CH4a	N.C.	AUX2a	N.O.	
3	Green	CH3b	N.C.	AUX1b	N.O.	
4	Yellow	CH2a	N.C.	CH2a	N.C.	
5	Gray	CH2b	N.C.	CH2b	N.C.	
6	Pink	CH1a	N.C.	CH1a	N.C.	
7	Blue	CH4b	N.C.	AUX2b	N.O.	
8	Red	CH1b	N.C.	CH1b	N.C.	

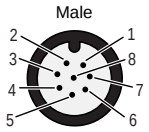

SSA-EB1xx-12ED1Q8 (Illuminated Button)

Pin	Color	Function	Contacts	Pinout
1	White	AUX1a	N.O.	
2	Brown	LED +	+ V DC	
3	Green	AUX1b	N.O.	
4	Yellow	CH2a	N.C.	
5	Gray	CH2b	N.C.	
6	Pink	CH1a	N.C.	
7	Blue	LED com.	0 V DC	
8	Red	CH1b	N.C.	

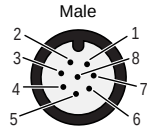

Checkout

At machine set up, a *Designated Person*[7] should test each safety point for proper machine shutdown response. A *Designated Person* should check the safety point for proper operation, physical damage, button looseness, and excessive environmental contamination. This should take place on a periodic schedule determined by the user, based on the severity of the operating environment and the frequency of switch actuations.

Adjust or replace components as needed. If inspection reveals contamination on the switch, thoroughly clean the switch and eliminate the cause of the contamination. Replace the switch when any parts or assemblies are damaged, broken, deformed, or badly worn; or if the electrical/mechanical specifications (for the environment and operating conditions) have been exceeded.

Always test the control system for proper functioning under machine control conditions after performing maintenance or replacing the device.

Specifications

Housing / Button / Collar
Polycarbonate / Polyamide / Aluminum
#10 or M5 (M5 hardware included); Maximum Tightening Torque: 0.56 N·m (5 in·lbf)

Operating Conditions
–25 °C to +55 °C (–13 °F to +131 °F)
45% to 85% relative humidity (no condensation)

Environmental Rating
For Indoor Use Only
IP65 (IEC 60529)
UL Type 4X, UL Type 13

Insulation Resistance
100 MΩ minimum (500 V DC megger)

Impulse Withstand Voltage
2.5 kV

Pollution Degree
3

Output Configuration
See "Installation and Maintenance" on page 3

Overvoltage Category
II

[7] A *Designated Person* is identified in writing by the employer as being appropriately trained to perform a specified checkout procedure. A Qualified Person possesses a recognized degree or certificate or has extensive knowledge, training, and experience to solve problems relating to the emergency stop installation.

© Banner Engineering Corp. All rights reserved.
www.bannerengineering.com

Contact Material/Bounce

Gold plated silver / 20 ms

When the button is reset, the normally closed contacts will chatter. When pressing the button, the normally open contacts will chatter. When designing a control circuit, take the contact chatter time into consideration. Do not expose the switch to external shocks, otherwise the contacts will bounce.

Electrical Life

100,000 operations minimum, 250,000 operations minimum at 24 V AC/DC, 100 mA

Mechanical Life

250,000 operations

Shock Resistance

Operating extremes: 150 m/s^2 (15G)

Vibration Resistance

Operating extremes: 10 Hz to 500 Hz, amplitude 0.35 mm acceleration 50 m/s^2

LED Color

Red

LED Voltage / Current

24 V AC/DC ±10%, 15 mA

Total Weight of Padlock and Hasp (SSA-EB1M..-..only)

1500 g (3.3 lb) maximum

Electrical Rating

Minimum load: 1 mA at 5 V AC/DC

SSA-EB1(2)xx-..Q4 and **-..Q5:** 3 A at 250 V AC maximum

SSA-EB1(2)xx-..Q8: 2 A at 60 V AC/75 V DC maximum

UL Applications: 1.5 A at 250 V AC, 1 A at 30 V DC (pilot duty)

CE Applications: AC-15: 1.5 A at 250 V AC, DC-13: 1 A at 30 V DC

Rated Insulation Voltage (Ui)

250 V

Rated Current (Ith)

3A

B10d

100,000 (based on ISO13849-1)

Design Standards

Compliant with EN 60497-1 / -5-1, ISO 13850, ANSI B11.19, NFPA 79, IEC/EN 60204-1

Date code format (U.S. Standard Format)

YYWWX: 2-digit year, 2-digit week, "X" internal code

Rated Operating Current and Voltage (Ue)

Safety Contact (N.C.)		30 V	125 V	250 V
AC 50/60 Hz	Resistive Load (AC-12)	-	-	3 A
	Inductive Load (AC-15)	-	3 A	1.5 A
DC	Resistive Load (DC-12)	2 A	0.4 A	0.2 A
	Inductive Load (DC-13)	1 A	0.22 A	0.1 A

Monitor Contacts (N.O.)		30 V	125 V	250 V
AC 50/60 Hz	Resistive Load (AC-12)	-	1.2 A	0.6 A
	Inductive Load (AC-14)	-	0.6 A	0.3 A
DC	Resistive Load (DC-12)	2 A	0.4 A	0.2 A
	Inductive Load (DC-13)	1 A	0.22 A	0.1 A

The operating current is classified according to EN 60947-5-1 making and breaking capacities and are measured at resistive/inductive load types specified in EN 60947-5-1. See "Electrical Rating" above for specific model and UL/CE maximum ratings.

Certifications

Banner Engineering BV
Park Lane, Culliganlaan 2F bus 3
1831 Diegem, BELGIUM

Required Overcurrent Protection

WARNING: Electrical connections must be made by qualified personnel in accordance with local and national electrical codes and regulations.

Overcurrent protection is required to be provided by end product application per the supplied table.

Overcurrent protection may be provided with external fusing or via Current Limiting, Class 2 Power Supply.

Supply wiring leads < 24 AWG shall not be spliced.

For additional product support, go to www.bannerengineering.com.

Supply Wiring (AWG)	Required Overcurrent Protection (A)	Supply Wiring (AWG)	Required Overcurrent Protection (A)
20	5.0	26	1.0
22	3.0	28	0.8
24	2.0	30	0.5

Dimensions

All measurements are listed in millimeters [inches], unless noted otherwise. The measurements provided are subject to change.

© Banner Engineering Corp. All rights reserved.
www.bannerengineering.com

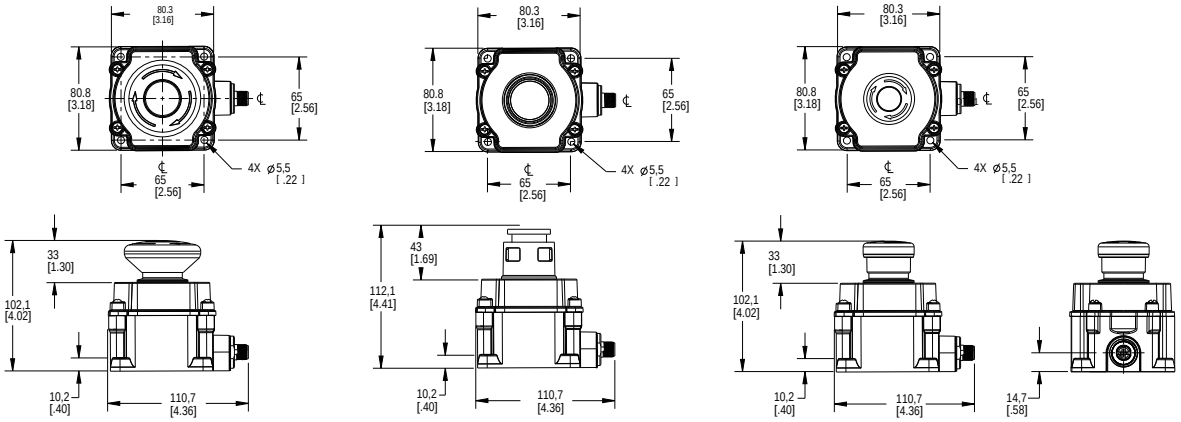

60 mm Push Button | Lockable Push Button | Standard Push Button

a	b	c	d
7 mm max	19 mm max	39 mm min	15 mm min[8]

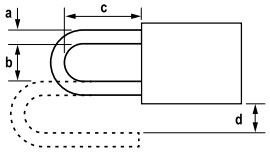

Accessories

Cordsets

4-Pin Single-Ended M12 Female Cordsets					
Model	**Length**	**Style**	**Dimensions**	**Pinout (Female)**	
MQDC-406	2 m (6.56 ft)	Straight	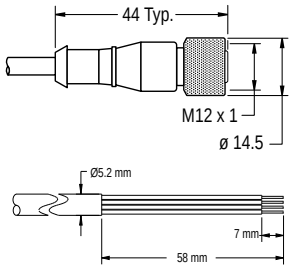	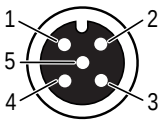	1 = Brown 2 = White 3 = Blue 4 = Black 5 = Not used
MQDC-415	5 m (16.4 ft)				
MQDC-430	9 m (29.5 ft)				
MQDC-450	15 m (49.2 ft)				
MQDC-406RA	2 m (6.56 ft)	Right-Angle	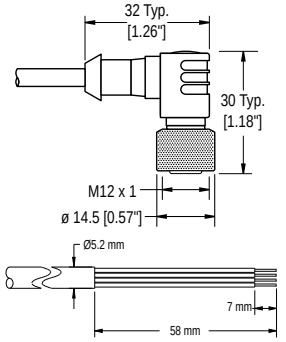	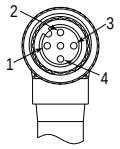	
MQDC-415RA	5 m (16.4 ft)				
MQDC-430RA	9 m (29.5 ft)				
MQDC-450RA	15 m (49.2 ft)				

[8] Dimension d is 6 mm or more when attaching a padlock from the side of a switch

© Banner Engineering Corp. All rights reserved.
www.bannerengineering.com

5-Pin Single-Ended M12 Female Cordsets				
Model	**Length**	**Style**	**Dimensions**	**Pinout (Female)**
MQDC1-501.5	0.5 m (1.5 ft)	Straight	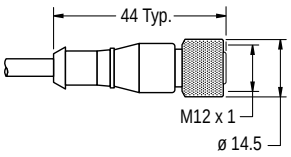	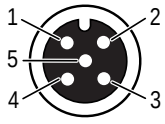 1 = Brown 2 = White 3 = Blue 4 = Black 5 = Gray
MQDC1-503	0.9 m (2.9 ft)			
MQDC1-506	2 m (6.5 ft)			
MQDC1-515	5 m (16.4 ft)			
MQDC1-530	9 m (29.5 ft)			
MQDC1-560	18 m (59 ft)			
MQDC1-5100	31 m (101.7 ft)			
MQDC1-506RA	2 m (6.5 ft)	Right-Angle	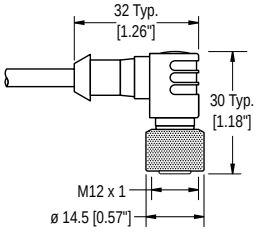	
MQDC1-515RA	5 m (16.4 ft)			
MQDC1-530RA	9 m (29.5 ft)			
MQDC1-560RA	19 m (62.3 ft)			

5-Pin Double-Ended M12 Female to M12 Male Cordsets					
Model	**Length**	**Style**	**Dimensions**	**Pinout (Male)**	**Pinout (Female)**
DEE2R-51D	0.3 m (1 ft)	Female Straight/Male Straight	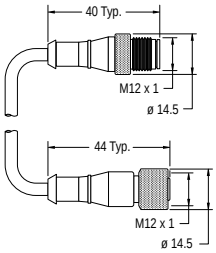		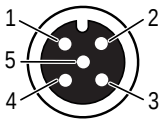
DEE2R-53D	0.91 m (3 ft)				
DEE2R-58D	2.44 m (8 ft)				
DEE2R-515D	4.57 m (15 ft)				
DEE2R-525D	7.62 m (25 ft)				
DEE2R-550D	15.2 m (50 ft)			1 = Brown 2 = White 3 = Blue	4 = Black 5 = Green/Yellow
DEE2R-575D	22.9 m (75 ft)				
DEE2R-5100D	30.5 m (100 ft)				

8-Pin A-Code Single-Ended M12 Female Cordsets (datasheet p/n 235941)				
Model	**Length**	**Dimensions (mm)**	**Pinout (Female)**	
BC-M12F8-24-1	1 m (3.28 ft)	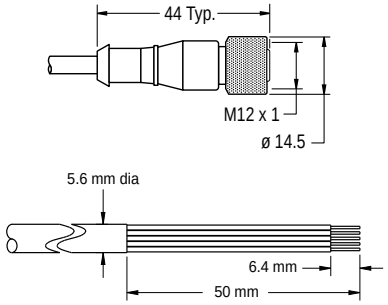	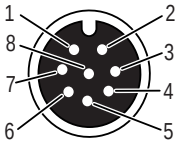	1 = White 2 = Brown 3 = Green 4 = Yellow 5 = Gray 6 = Pink 7 = Blue 8 = Red
BC-M12F8-24-2	2 m (6.56 ft)			
BC-M12F8-24-5	5 m (16.4 ft)			
BC-M12F8-24-10	10 m (30.81 ft)			

© Banner Engineering Corp. All rights reserved.
www.bannerengineering.com

8-Pin Double-Ended M12 Female to M12 Male Cordsets				
Model (8-pin/8-pin)	**Length**	**Style**	**Dimensions**	**Pinout**
DEE2R-81D	0.3 m (1 ft)	Female Straight/ Male Straight	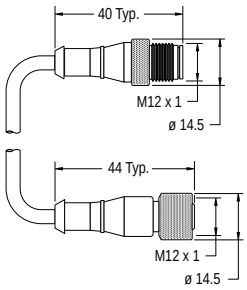	Female 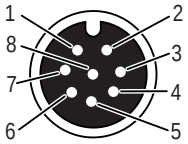 Male 
DEE2R-82D	0.91 m (3 ft)			
DEE2R-88D	2.44 m (8 ft)			
DEE2R-815D	4.57 m (15 ft)			
DEE2R-825D	7.62 m (25 ft)			
DEE2R-850D	15.24 m (50 ft)			
DEE2R-875D	22.86 m (75 ft)			
DEE2R-8100D	30.48 m (100 ft)			1 = Brown 2 = Orange/Black 3 = Orange 4 = White 5 = Black 6 = Blue 7 = Green/Yellow 8 = Violet

See Banner Engineering catalog or go to www.bannerengineering.com for additional models and complete information.

Series Connection Cordset Solution

This interconnection solution allows for quick wiring of a series of string emergency stop buttons. For the models listed below, Branch #1 and Branch #2 are 300 mm (12 in) in length and the length of the trunk is listed below.

WARNING: Intentional Defeat
The CSS Series Connection Cordsets must be installed so that they cannot be easily defeated. Ensure that mounting and routing of the cordsets that are connected to the Trunk, Branch #1, Branch #2, and the E-Stop QD connector does not allow access to the QD connectors or allow improper connection bypassing the function of the Emergency Stop.

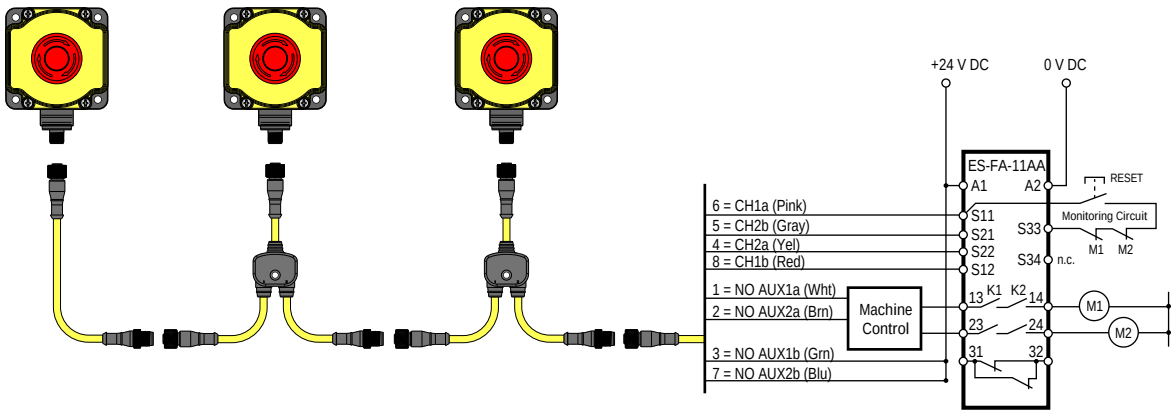

Model	Length	Description
CSS-M12F41M12M41M12F41	0.30 m (1 ft)	4-pin M12 QD splitter cordset for use with SSA-EB1xx-02ED1Q4
CSS-M12F43M12M41M12F41	0.91 m (3 ft)	
CSS-M12F48M12M41M12F41	2.44 m (8 ft)	

Continued on page 9

© Banner Engineering Corp. All rights reserved.
www.bannerengineering.com

Continued from page 8

Model	Length	Description

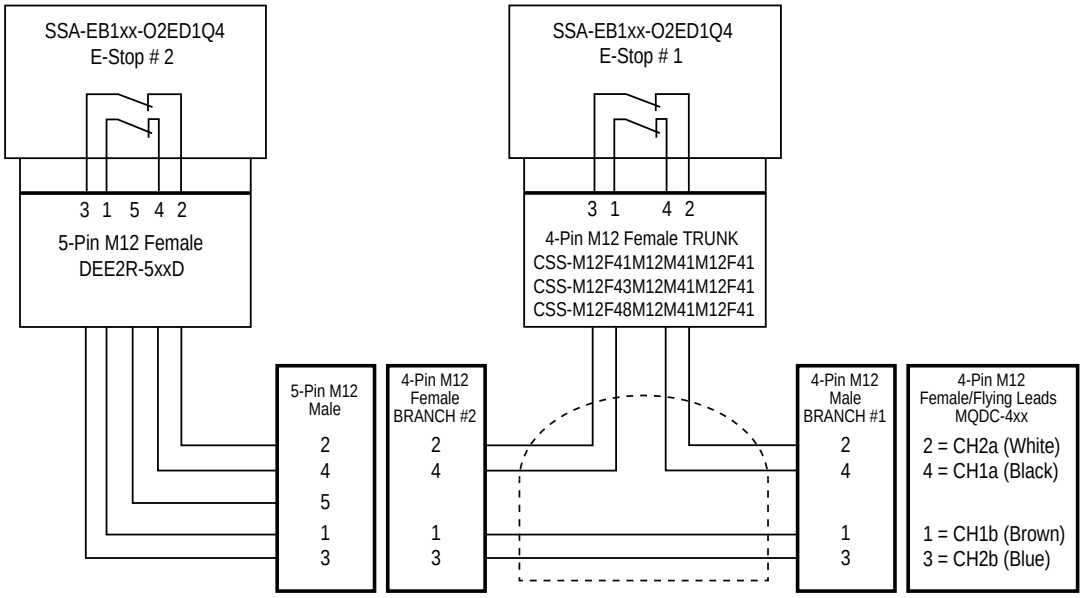

Model	Length	Description
CSS-M12F81M12M81M12F81	0.30 m (1 ft)	8-pin M12 QD splitter cordset for use with SSA-EB1xx-22ED1Q8
CSS-M12F83M12M81M12F81	0.91 m (3 ft)	
CSS-M12F88M12M81M12F81	2.44 m (8 ft)	

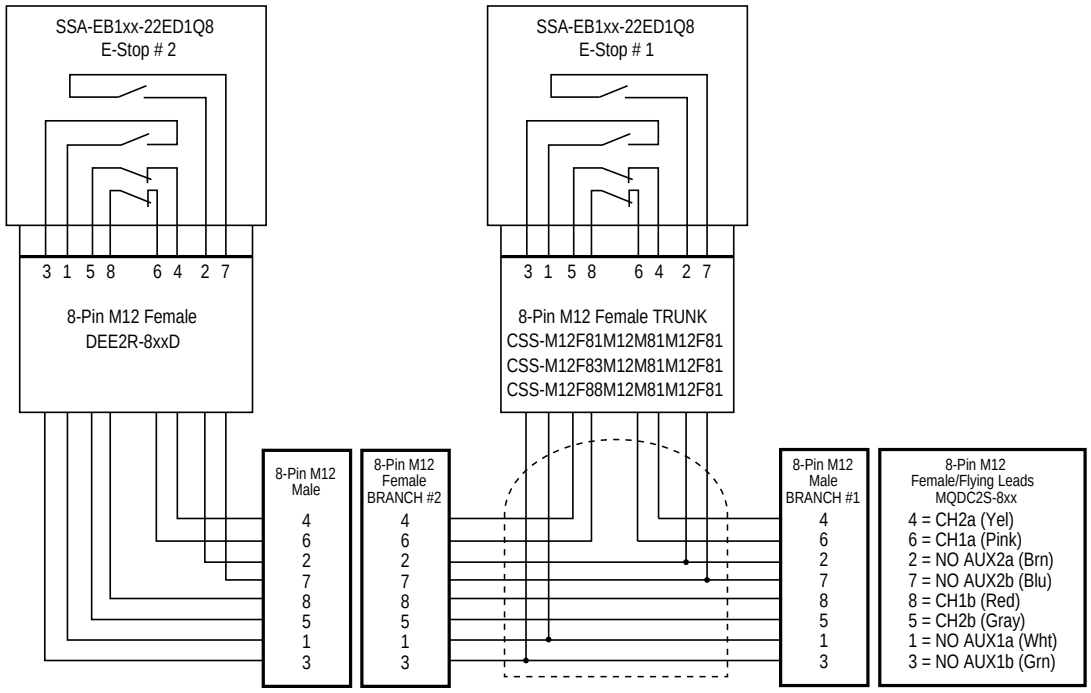

Model	Length	Description
CSS-M12F81M12M81M12F81	0.30 m (1 ft)	8-pin M12 QD splitter cordset for use with SSA-EB1xx-12ED1Q8
CSS-M12F83M12M81M12F81	0.91 m (3 ft)	
CSS-M12F88M12M81M12F81	2.44 m (8 ft)	

Continued on page 10

© Banner Engineering Corp. All rights reserved.
www.bannerengineering.com

Continued from page 9

Model	Length	Description

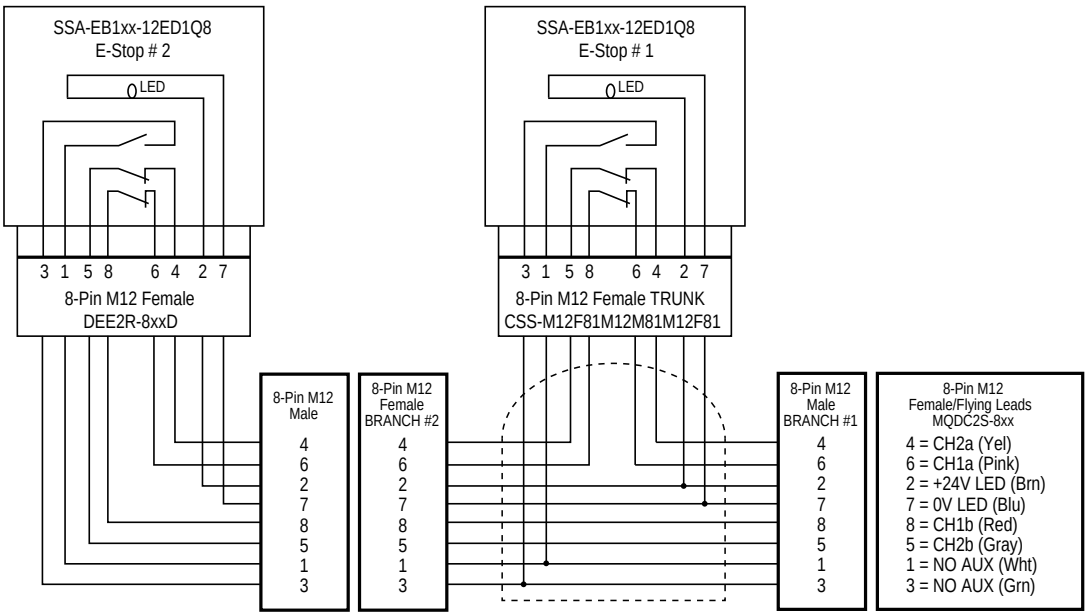

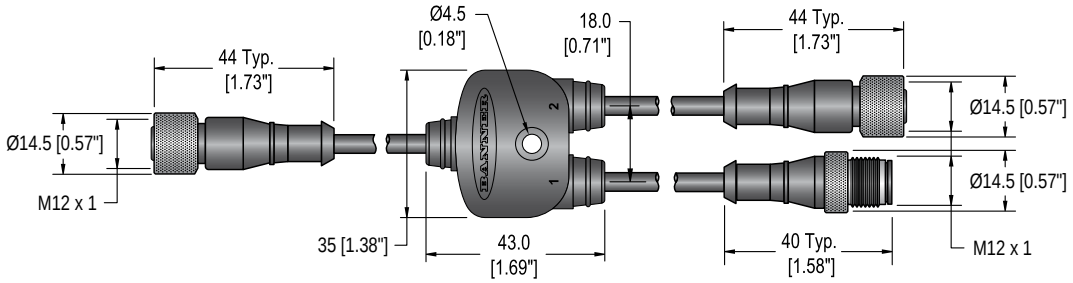

Product Support and Maintenance

Repairs and Translations

English

Contact Banner Engineering for troubleshooting of this device. **Do not attempt any repairs to this Banner device; it contains no field-replaceable parts or components.** If the device, device part, or device component is determined to be defective by a Banner Applications Engineer, they will advise you of Banner's RMA (Return Merchandise Authorization) procedure.

```
IMPORTANT: If instructed to return the device, pack it with care. Damage that occurs in return shipping is
not covered by warranty.
```

Obtain assistance with product repairs by contacting your local Banner Engineering Corp distributor or by calling Banner directly at (763) 544-3164. Access literature translated into your native language on the Banner website at www.bannerengineering.com or contact Banner directly at (763) 544-3164.

© Banner Engineering Corp. All rights reserved.
www.bannerengineering.com

Deutsch

Wenden Sie sich zur Fehlerbehebung dieses Geräts an Banner Engineering. **Versuchen Sie nicht, Reparaturen an diesem Banner-Gerät vorzunehmen. Das Gerät enthält keine am Einsatzort auszuwechselnden Teile oder Komponenten.** Wenn ein Banner-Anwendungstechniker zu dem Schluss kommt, dass dieses Gerät, ein Teil oder eine Komponente davon defekt ist, erhalten Sie von dem Techniker Erläuterungen zu Banners RMA-Verfahren (Return Merchandise Authorization) für die Warenrückgabe.

WICHTIG: Wenn Sie der Techniker anweist, das Gerät zurückzusenden, verpacken Sie es bitte sorgfältig. Transportschäden bei der Rücksendung werden von der Garantie nicht abgedeckt.

Unterstützung bei Produktreparaturen erhalten Sie von Ihrem örtlichen Banner Engineering Corp Händler oder direkt von Banner unter Tel. (763) 544-3164. Die in Ihre Muttersprache übersetzte Literatur finden Sie auf der Banner-Website unter www.bannerengineering.com oder kontaktieren Sie Banner direkt unter Tel. (763) 544-3164.

Français

Pour plus d'informations sur le dépannage du produit, contactez Banner Engineering. **Ne tentez pas de réparer ce dispositif Banner. Il ne contient aucun composant ou pièce qui puisse être remplacé sur place.** Si un ingénieur de Banner conclut que le dispositif ou l'une de ses pièces ou composants est défectueux, il vous informera de la procédure à suivre pour le retour des produits (RMA).

Important : Si vous devez retourner le dispositif, emballez-le avec soin. Les dégâts occasionnés pendant le transport de retour ne sont pas couverts par la garantie.

Pour vous aider lors de la réparation de produits, contactez votre distributeur Banner local our appelez directement Banner au (763) 544-3164. La documentation traduite dans votre langue est disponible sur le site internet de Banner www.bannerengineering.com ou contactez directement Banner au (763) 544-3164.

Italiano

Per le procedure di individuazione e riparazione dei guasti di questo dispositivo, contattare Banner Engineering. **Non tentare di riparare questo dispositivo Banner, in quanto non contiene parti o componenti sostituibili dall'utente.** Se il dispositivo, una parte del dispositivo o un componente del dispositivo viene riscontrato difettoso da un tecnico Banner, il nostro personale vi comunicherà la procedura da seguire per ottenere l'autorizzazione al reso.

Importante: Se si ricevono istruzioni di rispedire il dispositivo al produttore, imballarlo con cura. I danni dovuti al trasporto non sono coperti dalla garanzia.

Per assistenza nelle riparazioni dei prodotti, contattare il distributore locale Banner Engineering Corp o contattare direttamente Banner al numero (763) 544-3164. È possibile accedere alla documentazione tradotta nella propria lingua madre sul sito Web Banner all'indirizzo www.bannerengineering.com o contattare direttamente Banner al numero (763) 544-3164.

Español

Comuníquese con Banner Engineering para solucionar de problemas de este dispositivo. **No intente ninguna reparación a este dispositivo de Banner, contiene piezas o componente que no se pueden cambiar en terreno.** Si algún ingeniero de aplicaciones de Banner determina que el dispositivo, alguna de las piezas o alguno de los componentes del dispositivo está defectuoso, le informará el procedimiento de autorización de devolución de mercancía (RMA, por sus siglas en inglés) de Banner.

Importante: Si se le solicita devolver el dispositivo, empáquelo con cuidado. Puede haber daños durante el envío de devolución que no estén cubiertos por la garantía.

Para reparaciones de productos, por favor contacte a su distribuidor local de Banner Engineering o llame a Banner directamente al 00 1 (763) 544-3164. Vea la literatura traducida en su idioma en el sitio web Banner en www.bannerengineering.com o comuníquese con Banner directamente al 00 1 (763) 544-3164.

中国人

如需对本装置进行故障排查，请联系邦纳。**请勿尝试自行维修该邦纳装置；本装置不包含任何可在现场更换的部件或组件。** 若经邦纳应用工程师确认设备、设备部件或组件存在缺陷，他们将告知您邦纳退货授权 (RMA) 流程。

重要注意事项： 如被要求退回装置，请妥善包装后寄回。退货运输过程中发生的损坏不在保修范围内。

请联系当地的 Banner Engineering Corp 经销商或直接致电 Banner +1 (763) 544-3164，以获得产品维修帮助。请访问邦纳网站 www.bannerengineering.com 或直接拨打 +1 (763) 544-3164 联系邦纳，获取翻译成您母语的资料。

한국인

이 장치의 문제를 해결하려면 Banner Engineering에 문의하십시오. **이 Banner 장치에는 현장에서 교체할 수 있는 부품 또는 구성품이 없으므로 수리를 시도하지 마십시오.** Banner 애플리케이션 엔지니어가 장치, 장치 부품 또는 장치 구성품에 결함이 있는 것으로 판정하면, Banner의 RMA(제품 반송 승인)절차에 대해 안내해 드립니다.

중요: 제품을 반송하도록 안내 받으셨다면 잘 포장해주십시오. 반송 도중에 발생한 손상은 보증 서비스가 적용되지 않습니다.

제품 수리에 대한 지원은 지역 Banner Engineering Corp 대리점에 문의하거나 Banner에 직접 (763) 544-3164로 문의하실 수 있습니다. 사용자의 모국어로 번역된 자료는 Banner 웹사이트 www.bannerengineering.com에서 액세스하거나 Banner에 직접 (763) 544-3164로 문의하실 수 있습니다.

© Banner Engineering Corp. All rights reserved.
www.bannerengineering.com

日本語

この装置のトラブルシューティングについては、バナーエンジニアリングにお問い合わせください。**このバナー装置には、現場では交換できない部品またはコンポーネントが含まれているため、修理を試みてはいけません。** バナーのアプリケーションエンジニアが装置、装置の部品、または装置のコンポーネントに欠陥があると判断した場合、バナーのRMA（返品承認）手続きについてお知らせします。

> **重要 ：** 返品を指示された場合は、装置を丁寧に梱包してください。返品時に発生した破損は保証の対象外となります。

製品の修理については、最寄りのBanner Engineering Corp代理店にお問い合わせいただくか、米国+1 (763) 544-3164まで直接お電話でお問い合わせください。バナーのウェブサイト（www.bannerengineering.com）でお客様の言語に翻訳された資料にアクセスするか、米国+1 (763) 544-3164まで直接お電話でお問い合わせください。

čeština

Pro řešení problémů se zařízením kontaktujte společnost Banner Engineering. **Neprovádějte žádné opravy zařízení Banner. Neobsahují žádné komponenty nebo části, které by byly vyměnitelné.** Pokud je zařízení, jeho část nebo díl označen technikem společnosti Banner jako poškozený, bude Vám doporučeno vyplnit reklamační RMA protokol.

> **Důležité:** Pokud byl vydán požadavek na vrácení zařízení, pečlivě ho zabalte. Poškození vzniklé při dopravě není považováno za záruční opravu.

Pokud produkt potřebuje opravu, vyžádejte si pomoc od místního distributora společnosti Banner Engineering Corp nebo přímo na telefonním čísle (763) 544-3164. Dokumentaci přeloženou do vašeho jazyka si vyhledejte na webových stránkách společnosti Banner na adrese www.bannerengineering.com nebo se obraťte přímo na společnost Banner na telefonním čísle (763) 544-3164.

Polski

W celu rozwiązania problemów z urządzeniem należy skontaktować się z działem technicznym firmy Banner Engineering. **Pod żadnym pozorem nie próbuj naprawiać tego urządzenia firmy Banner; nie zawiera ono części ani elementów, które można wymieniać samodzielnie.** Jeśli urządzenie, jego część lub element zostaną uznane za wadliwe przez inżyniera technicznego Banner, poinformuje on użytkownika o firmowej procedurze zwrotu towaru (RMA) firmy Banner.

> **Ważne:** Jeśli urządzenie ma zostać zwrócone, należy je starannie zapakować. Uszkodzenia powstałe podczas odsyłki nie są objęte gwarancją.

Aby uzyskać pomoc w zakresie naprawy produktu, należy skontaktować się z lokalnym dystrybutorem Banner Engineering Corp lub zadzwonić bezpośrednio do firmy Banner pod numer (763) 544-3164. Dostęp do literatury przetłumaczonej na swój język ojczysty można uzyskać na stronie internetowej firmy Banner pod adresem www.bannerengineering.com lub kontaktując się bezpośrednio z firmą Banner pod numerem (763) 544-3164.

Português

Entre em contato com a Engenharia da Banner para a solução de problemas deste dispositivo. **Não tente fazer nenhum reparo neste dispositivo Banner; ele não contém peças ou componentes substituíveis em campo.** Se um técnico de aplicações da Banner determinar que o dispositivo, peça ou componente do dispositivo está com defeito, ele o informará sobre o procedimento de RMA (Autorização de Devolução de Mercadoria) da Banner.

> **Importante:** Se for instruído a devolver o dispositivo, embale-o com cuidado. Os danos ocorridos no transporte de devolução não são cobertos pela garantia.

Obtenha assistência para reparos do produto entrando em contato com o distribuidor local da Banner Engineering Corp ou ligando diretamente para a Banner no telefone (763) 544-3164. Acesse a literatura traduzida para seu idioma nativo no site da Banner em www.bannerengineering.com ou entre em contato diretamente com a Banner pelo telefone (763) 544-3164.

Türkçe

Bu cihazda sorun giderme işlemleri için Banner Engineering ile iletişime geçin. **Bu Banner cihazını onarmaya çalışmayın; cihaz sahada değiştirilebilir parça veya bileşen içermez.** Bir Banner Uygulama Mühendisi tarafından cihazın, cihazın bir parçasının veya bir cihaz bileşeninin kusurlu olduğu tespit edilirse, Banner RMA (İade Mal Yetkilendirme) prosedürü hakkında bilgilendirilirsiniz.

> **ÖNEMLİ:** İade etmeniz istenirse, cihazı dikkatli bir şekilde paketleyin. İade nakliyesinde meydana gelecek hasarlar garanti kapsamında değildir.

Yerel Banner Engineering Corp distribütörünüzle iletişime geçerek veya doğrudan (763) 544-3164 numaralı telefondan Banner'ı arayarak ürün onarımlarıyla ilgili yardım alın. Ana dilinize çevrilmiş dokümanlara www.bannerengineering.com adresindeki Banner web sitesinden erişebilir veya (763) 544-3164 numaralı telefondan doğrudan Banner ile iletişime geçebilirsiniz.

Contact Us

Banner Engineering Corp. | 9714 Tenth Avenue North | Plymouth, MN 55441, USA | Phone: + 1 888 373 6767

For worldwide locations and local representatives, visit www.bannerengineering.com.

Banner Engineering Corp Limited Warranty

Banner Engineering Corp. warrants its products to be free from defects in material and workmanship for one year following the date of shipment. Banner Engineering Corp. will repair or replace, free of charge, any product of its manufacture which, at the time it is returned to the factory, is found to have been defective during the warranty period. This warranty does not cover damage or liability for misuse, abuse, or the improper application or installation of the Banner product.

THIS LIMITED WARRANTY IS EXCLUSIVE AND IN LIEU OF ALL OTHER WARRANTIES WHETHER EXPRESS OR IMPLIED (INCLUDING, WITHOUT LIMITATION, ANY WARRANTY OF MERCHANTABILITY OR FITNESS FOR A PARTICULAR PURPOSE), AND WHETHER ARISING UNDER COURSE OF PERFORMANCE, COURSE OF DEALING OR TRADE USAGE.

© Banner Engineering Corp. All rights reserved.
www.bannerengineering.com

This Warranty is exclusive and limited to repair or, at the discretion of Banner Engineering Corp., replacement. **IN NO EVENT SHALL BANNER ENGINEERING CORP. BE LIABLE TO BUYER OR ANY OTHER PERSON OR ENTITY FOR ANY EXTRA COSTS, EXPENSES, LOSSES, LOSS OF PROFITS, OR ANY INCIDENTAL, CONSEQUENTIAL OR SPECIAL DAMAGES RESULTING FROM ANY PRODUCT DEFECT OR FROM THE USE OR INABILITY TO USE THE PRODUCT, WHETHER ARISING IN CONTRACT OR WARRANTY, STATUTE, TORT, STRICT LIABILITY, NEGLIGENCE, OR OTHERWISE.**

Banner Engineering Corp. reserves the right to change, modify or improve the design of the product without assuming any obligations or liabilities relating to any product previously manufactured by Banner Engineering Corp. Any misuse, abuse, or improper application or installation of this product or use of the product for personal protection applications when the product is identified as not intended for such purposes will void the product warranty. Any modifications to this product without prior express approval by Banner Engineering Corp will void the product warranties. All specifications published in this document are subject to change; Banner reserves the right to modify product specifications or update documentation at any time. Specifications and product information in English supersede that which is provided in any other language. For the most recent version of any documentation, refer to: www.bannerengineering.com.

For patent information, see www.bannerengineering.com/patents.

Standards and Regulations

The list of standards below is included as a convenience for users of this device. Inclusion of the standards below does not imply that the device complies specifically with any standard, other than those specified in the Specifications/Design Standards section of this manual. See the American National Standards Institute (ANSI) at https://webstore.ansi.org/ or another source for applicable documents.

Applicable U.S. Standards

Not inclusive

ANSI B11 Standards for Machine Tools Safety

ANSI/RIA R15.06 Safety Requirements for Industrial Robots and Robot Systems

NFPA 79 Electrical Standard for Industrial Machinery

ANSI/PMMI B155.1 Package Machinery and Packaging-Related Converting Machinery — Safety Requirements

ANSI/ASSP Z244.1-2024 The Control of Hazardous Energy – Lockout, Tagout, and Alternative Methods

OSHA 29 CFR 1910 Occupational Safety and Health Standards

Applicable European and International Standards

Not Inclusive

ISO 12100 Safety of Machinery – General Principles for Design – Risk Assessment and Risk Reduction

EN 60204-1 Electrical Equipment of Machines Part 1: General Requirements

ISO 13849-1 Safety of Machinery – Safety-Related Parts of Control Systems – Part 1: General Principles for Design

IEC 61508 Functional Safety of Electrical/Electronic/Programmable Electronic Safety-Related Systems

ISO 13850 Emergency Stop Devices, Functional Aspects – Principles for Design

EN 13855 The Positioning of Protective Equipment in Respect to Approach Speeds of Parts of the Human Body

ISO 13857 Safety of Machinery – Safety Distances to Prevent Hazard Zones Being Reached

ISO 14119 Interlocking Devices Associated with Guards – Principles for Design and Selection

ISO 14120 Safety of machinery – Guards – General requirements for the design and construction of fixed and movable guards

Acquire a type C standard for your specific machinery.

© Banner Engineering Corp. All rights reserved.