S18 Series Sensor (DC Voltage) Datasheet

Features

For complete technical information about this product, including installation instructions, application requirements and guidelines, technical specifications, and accessories, go to www.bannerengineering.com and search for instruction manual part number 121522.

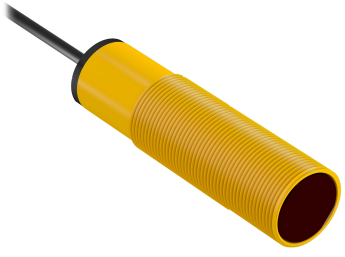

WARNING:
- **Do not use this device for personnel protection**
- Using this device for personnel protection could result in serious injury or death.
- This device does not include the self-checking redundant circuitry necessary to allow its use in personnel safety applications. A device failure or malfunction can cause either an energized (on) or de-energized (off) output condition.

Models

Sensing Mode	Model [1]		Range	LED	Output
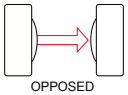 OPPOSED	**S186E**	Emitter	20 m (66 ft)	Infrared 950 nm	-
	S18SN6R	Receiver			NPN
	S18SP6R				PNP
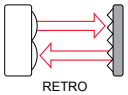 RETRO	**S18SN6L**		2 m (79 in)	Infrared 950 nm	NPN
	S18SP6L				PNP
 POLAR RETRO [2]	**S18SN6LP**		2 m (79 in)	Visible Red 680 nm	NPN
	S18SP6LP				PNP
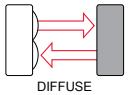 DIFFUSE	**S18SN6D**		100 mm (4 in)	Infrared 880 nm	NPN
	S18SP6D				PNP
	S18SN6DL		300 mm (12 in)		NPN
	S18SP6DL				PNP
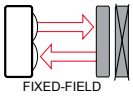 FIXED-FIELD	**S18SN6FF25**		25 mm (1 in) cutoff	Infrared 880 nm	NPN
	S18SP6FF25				PNP
	S18SN6FF50		50 mm (2 in) cutoff		NPN
	S18SP6FF50				PNP
	S18SN6FF100		100 mm (4 in) cutoff		NPN
	S18SP6FF100				PNP

NOTE: Users must purchase one emitter and one receiver for opposed mode sensors.

Wiring Diagrams

Wiring for the quick disconnect (QD) models is functionally identical.

[1] Standard 2 m (6.5 ft) cable models are listed.
- To order the 9 m (30 ft) cable models, add suffix **W/30** (for example, **S186E W/30**).
- To order the 4-pin M12 QD models, add suffix **Q** (for example, **S186EQ**). A model with a QD connector requires a mating cable.

[2] Use polarized models when shiny objects will be sensed.

Original Instructions
17-Dec-25

© Banner Engineering Corp. All rights reserved.
www.bannerengineering.com

116159
p/n: 116159 Rev. F

ПРОМЭЛЕКТРОНИКА/ sales@prom-elec.com

Cabled Emitters	QD Emitters	Pinout (male)	Key
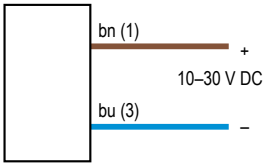	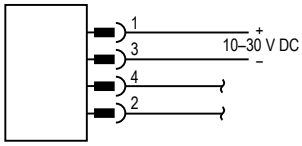	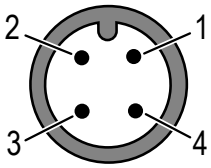	1. Brown 2. White 3. Blue 4. Black

NPN Standard	NPN Alarm	PNP Standard	PNP Alarm
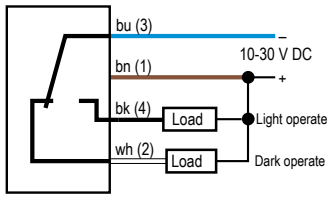	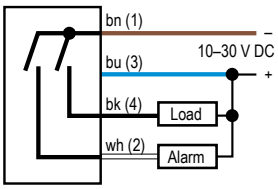	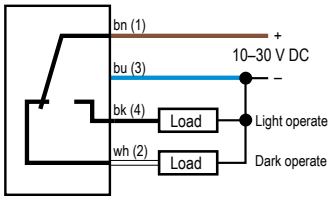	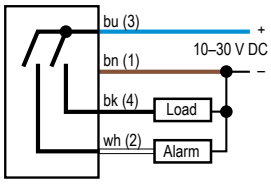

In light operate (LO) mode, the output is ON when the target returns the same or more light to the sensor and OFF when the sensor detects less light than the configured/taught target. In **opposed and retroreflective sensing modes**, light operate is active when the beam is unblocked. In **diffuse, fixed field, and adjustable field sensor modes**, light operate is active when the target is present.

In dark operate (DO) mode, the output is ON when the target returns less light to the sensor than the configured target and OFF when the sensor detects more light than the configured/taught target. In **opposed and retroreflective sensing modes**, dark operate is active when the beam is blocked. In **diffuse, fixed field, and adjustable field sensor modes**, dark operate is active when the target is absent.

Specifications

Supply Voltage and Current

10 to 30 V DC (10% maximum ripple)

Supply current (exclusive of load current):

Emitters, non-polarized retroreflective, retroreflective, diffuse models: 25 mA

Receivers: 20 mA

Polarized retroreflective models: 30 mA

Fixed-field models: 35 mA

Supply Protection Circuitry

Protected against reverse polarity and transient voltages

Output Protection Circuitry

Protected against false pulse on power-up and continuous overload or short circuit of outputs

Indicators

Two LEDs (green and amber):

Green on: power to sensor is on

Green flashing: output is overloaded

Amber on: normally open (NO) output is conducting

Amber flashing: excess gain marginal (1 to 1.5×) in light condition

Construction

Housing: PBT polyester housing

Lens: polycarbonate (opposed-mode) or acrylic (other models)

Connections

2 m (6.5 ft) integral cable; 9 m (30 ft) integral cable; or 4-pin M12 quick-disconnect fitting

Repeatability

Opposed mode models: 375 µs

Retroreflective, fixed-field, and diffuse mode models: 750 µs

Repeatability and response are independent of signal strength.

Output Configuration

SPDT solid-state DC switch; Choose NPN (current sinking) or PNP (current sourcing) models

Light Operate: Normally open (NO) output conducts when sensor sees its own (or the emitter's) modulated light

Dark Operate: Normally closed (NC) output conducts when the sensor sees dark; the NC output may be wired as a normally open marginal signal alarm output, depending upon wiring to power supply (U.S. patent 5087838)

Output Rating

150 mA maximum (each) in standard wiring. When wired for alarm output, the total load may not exceed 150 mA.

OFF-state leakage current: < 1 microamp at 30 V DC

ON-state saturation voltage: < 1 V at 10 mA DC; < 1.5 V at 150 mA DC

Output Response Time

Opposed mode models: 3 ms ON, 1.5 ms OFF

Retroreflective, fixed-field, and diffuse mode models: 3 ms ON and OFF

NOTE: 100 ms delay on power-up; outputs do not conduct during this time.

Operating Conditions

–40 °C to +70 °C (–40 °F to +158 °F)

90% at +50 °C maximum relative humidity (non-condensing)

Environmental Rating

Leakproof design rated NEMA 6P and IEC IP67 per IEC 60529

IP69K per DIN40050 for quick disconnect and cable models when the cables are protected from direct spray

Vibration and Mechanical Shock

All models meet MIL-STD-202F, Method 201A (Vibration: 10 Hz to 60 Hz maximum, 0.06 inch (1.52 mm) double amplitude, 10G acceleration) requirements.

Method 213B conditions H&I.

Shock: 75G with device operating; 100G for non-operation

Certifications

Banner Engineering BV
Park Lane, Culliganlaan 2F bus 3
1831 Diegem, BELGIUM

Turck Banner LTD Blenheim House
Blenheim Court
Wickford, Essex SS11 8YT
GREAT BRITAIN

Required Overcurrent Protection

WARNING: Electrical connections must be made by qualified personnel in accordance with local and national electrical codes and regulations.

Overcurrent protection is required to be provided by end product application per the supplied table.

Overcurrent protection may be provided with external fusing or via Current Limiting, Class 2 Power Supply.

Supply wiring leads < 24 AWG shall not be spliced.

For additional product support, go to www.bannerengineering.com.

Supply Wiring (AWG)	Required Overcurrent Protection (A)	Supply Wiring (AWG)	Required Overcurrent Protection (A)
20	5.0	26	1.0
22	3.0	28	0.8
24	2.0	30	0.5

FCC Part 15 Class B for Unintentional Radiators

(Part 15.105(b)) This equipment has been tested and found to comply with the limits for a Class B digital device, pursuant to part 15 of the FCC Rules. These limits are designed to provide reasonable protection against harmful interference in a residential installation. This equipment generates, uses, and can radiate radio frequency energy and, if not installed and used in accordance with the instructions, may cause harmful interference to radio communications. However, there is no guarantee that interference will not occur in a particular installation. If this equipment does cause harmful interference to radio or television reception, which can be determined by turning the equipment off and on, the user is encouraged to try to correct the interference by one or more of the following measures:

- Reorient or relocate the receiving antenna.
- Increase the separation between the equipment and receiver.
- Connect the equipment into an outlet on a circuit different from that to which the receiver is connected.
- Consult the dealer or an experienced radio/TV technician for help.

(Part 15.21) Any changes or modifications not expressly approved by the party responsible for compliance could void the user's authority to operate this equipment.

© Banner Engineering Corp. All rights reserved. www.bannerengineering.com

Industry Canada ICES-003(B)

This device complies with CAN ICES-3 (B)/NMB-3(B). Operation is subject to the following two conditions: 1) This device may not cause harmful interference; and 2) This device must accept any interference received, including interference that may cause undesired operation.

Cet appareil est conforme à la norme NMB-3(B). Le fonctionnement est soumis aux deux conditions suivantes : (1) ce dispositif ne peut pas occasionner d'interférences, et (2) il doit tolérer toute interférence, y compris celles susceptibles de provoquer un fonctionnement non souhaité du dispositif.

Dimensions

Cabled models

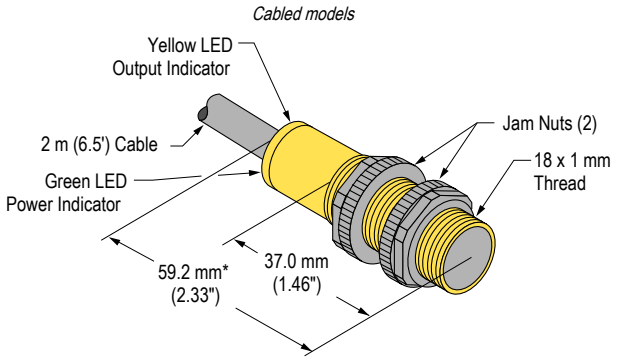

*Polarized retro and fixed-field models = 65.0 mm (2.56")

Quick disconnect models

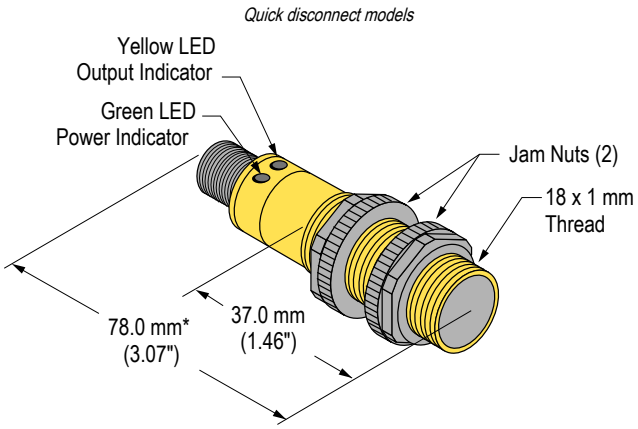

*Polarized retro and fixed-field models = 83.8 mm (3.30")

Accessories

Cordsets

4-pin Single-Ended M12 Female Cordsets (datasheet p/n 235937)

Model	Length	Dimensions (mm)	Pinout (Female)	
BC-M12F4-22-1	1 m (3.28 ft)	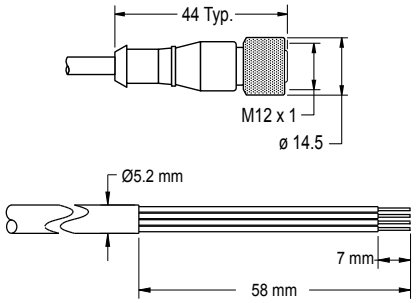	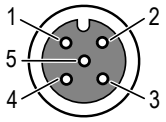	1 = Brown 2 = White 3 = Blue 4 = Black 5 = Unused
BC-M12F4-22-2	2 m (6.56 ft)			
BC-M12F4-22-5	5 m (16.4 ft)			
BC-M12F4-22-8	8 m (26.25 ft)			
BC-M12F4-22-10	10 m (30.81 ft)			
BC-M12F4-22-15	15 m (49.2 ft)			
BC-M12F4-22-20	20 m (65.61 ft)			
BC-M12F4-22-25	25 m (82.02 ft)			
BC-M12F4-22-30	30 m (98.42 ft)			

4-pin Single-Ended M12 Female Right-Angle Cordsets (datasheet p/n 235937)

Model	Length	Dimensions (mm)	Pinout (Female)	
BC-M12F4A-22-1	1 m (3.28 ft)	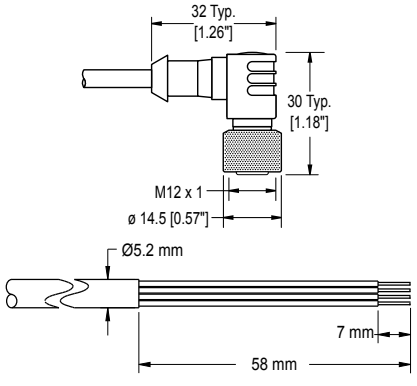	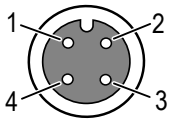	1 = Brown 2 = White 3 = Blue 4 = Black 5 = Unused
BC-M12F4A-22-2	2 m (6.56 ft)			
BC-M12F4A-22-5	5 m (16.4 ft)			
BC-M12F4A-22-8	8 m (26.25 ft)			
BC-M12F4A-22-10	10 m (30.81 ft)			
BC-M12F4A-22-15	15 m (49.2 ft)			

© Banner Engineering Corp. All rights reserved. www.bannerengineering.com

Sensor Status Indicators

S15L Series In-Line Sensor Status Indicator						
Model	**Input Type**	**LED Color**	**Dimensions**	**Female**	**Male**	**Wiring**
S15LGYPQ	PNP	Power ON = Green Input Active = Yellow	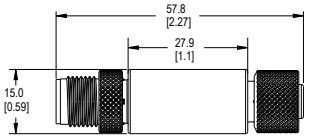	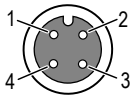		1 = Brown, 10 to 30 V DC 2 = White 3 = Blue, DC common 4 = Black, Sensor Input
S15LGYNQ	NPN					

Banner Engineering Corp Limited Warranty

Banner Engineering Corp. warrants its products to be free from defects in material and workmanship for one year following the date of shipment. Banner Engineering Corp. will repair or replace, free of charge, any product of its manufacture which, at the time it is returned to the factory, is found to have been defective during the warranty period. This warranty does not cover damage or liability for misuse, abuse, or the improper application or installation of the Banner product.

THIS LIMITED WARRANTY IS EXCLUSIVE AND IN LIEU OF ALL OTHER WARRANTIES WHETHER EXPRESS OR IMPLIED (INCLUDING, WITHOUT LIMITATION, ANY WARRANTY OF MERCHANTABILITY OR FITNESS FOR A PARTICULAR PURPOSE), AND WHETHER ARISING UNDER COURSE OF PERFORMANCE, COURSE OF DEALING OR TRADE USAGE.

This Warranty is exclusive and limited to repair or, at the discretion of Banner Engineering Corp., replacement. **IN NO EVENT SHALL BANNER ENGINEERING CORP. BE LIABLE TO BUYER OR ANY OTHER PERSON OR ENTITY FOR ANY EXTRA COSTS, EXPENSES, LOSSES, LOSS OF PROFITS, OR ANY INCIDENTAL, CONSEQUENTIAL OR SPECIAL DAMAGES RESULTING FROM ANY PRODUCT DEFECT OR FROM THE USE OR INABILITY TO USE THE PRODUCT, WHETHER ARISING IN CONTRACT OR WARRANTY, STATUTE, TORT, STRICT LIABILITY, NEGLIGENCE, OR OTHERWISE.**

Banner Engineering Corp. reserves the right to change, modify or improve the design of the product without assuming any obligations or liabilities relating to any product previously manufactured by Banner Engineering Corp. Any misuse, abuse, or improper application or installation of this product or use of the product for personal protection applications when the product is identified as not intended for such purposes will void the product warranty. Any modifications to this product without prior express approval by Banner Engineering Corp will void the product warranties. All specifications published in this document are subject to change; Banner reserves the right to modify product specifications or update documentation at any time. Specifications and product information in English supersede that which is provided in any other language. For the most recent version of any documentation, refer to: www.bannerengineering.com.

For patent information, see www.bannerengineering.com/patents.

© Banner Engineering Corp. All rights reserved. www.bannerengineering.com