MODEL NO.	"L"	P/N
PLIS-I-29332	2000 [79]	29332
PLIS-IUM3M	3000 [118]	94637
PLIS-IUM5M	5000 [197]	87082
PLIS-I	2000 [79]	71208

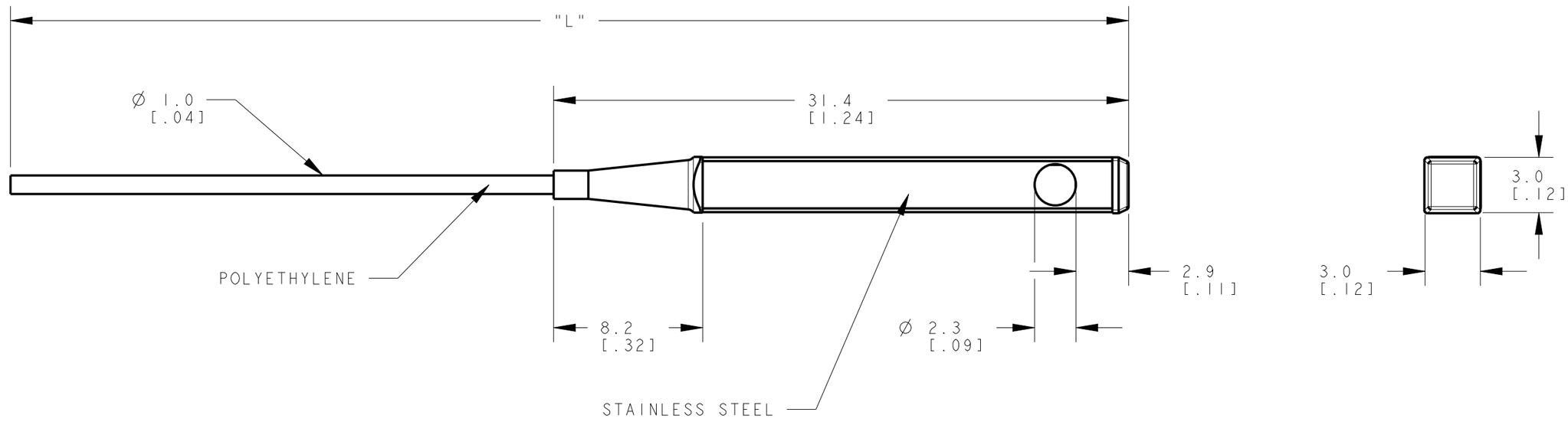

NOTES:
1. ALL DIMENSIONS ARE MILLIMETERS [INCHES] UNLESS OTHERWISE NOTED.
2. REFER TO "www.bannerengineering.com" FOR ADDITIONAL DATA AND SPECIFICATIONS.

This drawing is the property of BANNER ENGINEERING CORP. Any use or reproduction, in any form, without prior written permission of Banner is prohibited.
© Banner Engineering Corp.

THIRD ANGLE PROJECTION

BANNER ENGINEERING CORP.
www.bannerengineering.com

TITLE

PLIS SERIES UNTERMINATED

SIZE	DRAWING NO.	REV.
B	161875	A
SCALE 4:1	SHEET 1 OF 1	

CREO

ПРОМЭЛЕКТРОНИКА/ sales@prom-elec.com