ES-FA-6G 1-Channel Emergency Stop Safety Module

Datasheet

24 V ac/dc Operation

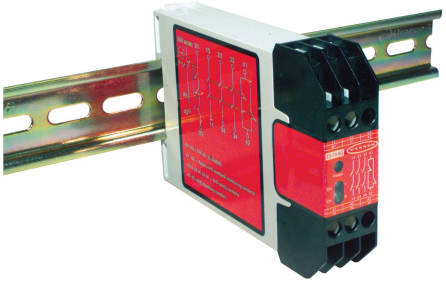

- Monitors one single-channel, normally closed Emergency Stop switch circuit for a contact failure or wiring fault
- Three output switching channels for connection to control-reliable power interrupt circuits
- Auto reset or manual reset
- One auxiliary non-safety N/C output contact for status monitoring by a process controller
- Design complies with standards UL991 and EN418 (Safety Category 2)
- For use in functional stop category 0 applications per NFPA 79 and EN418
- 6 amp safety output contacts

WARNING:

- **Not a stand-alone point-of-operation guarding device**
- This Banner device is not a stand-alone point-of-operation guarding device, as defined by OSHA regulations. Failure to install point-of-operation guards on hazardous machinery can result in a dangerous condition that could lead to serious injury or death.
- Install point-of-operation guarding devices, such as safety light screens and/or hard guards, to protect personnel from hazardous machinery.

Important: Read this First

The user is responsible for satisfying all local, state, and national laws, rules, codes, and regulations relating to the use of this product and its application. Banner Engineering Corp. has made every effort to provide complete application, installation, operation, and maintenance instructions. Please contact a Banner Applications Engineer with any questions regarding this product.

The user is responsible for making sure that all machine operators, maintenance personnel, electricians, and supervisors are thoroughly familiar with and understand all instructions regarding the installation, maintenance, and use of this product, and with the machinery it controls. The user and any personnel involved with the installation and use of this product must be thoroughly familiar with all applicable standards, some of which are listed within the specifications. Banner Engineering Corp. makes no claim regarding a specific recommendation of any organization, the accuracy or effectiveness of any information provided, or the appropriateness of the provided information for a specific application.

Applicable U.S. Standards

ANSI B11 Standards for Machine Tools Safety

Contact: Safety Director, AMT – The Association for Manufacturing Technology, 7901 Westpark Drive, McLean, VA 22102, Tel.: 703-893-2900

ANSI NFPA 79 Electrical Standard for Industrial Machinery

Contact: National Fire Protection Association, 1 Batterymarch Park, P.O. Box 9101, Quincy, MA 02269-9101, Tel.: 800-344-3555

ANSI/RIA R15.06 Safety Requirements for Industrial Robots and Robot Systems

Contact: Robotic Industries Association, 900 Victors Way, P.O. Box 3724, Ann Arbor, MI 48106, Tel.: 734-994-6088

Applicable International Standards

EN ISO 12100 Safety of Machinery – Basic Concepts, General Principles for Design

EN 60204-1 Electrical Equipment of Machines Part 1: General Requirements

ISO 13850 (EN 418) Emergency Stop Devices, Functional Aspects – Principles for Design

Contact: Global Engineering Documents, 15 Inverness Way East, Englewood, CO 80112-5704, Tel.: 800-854- 7179

Overview

The purpose of an Emergency Stop Safety Module (E-Stop Safety Module) is to increase the control reliability of an emergency stop circuit. The ANSI B11.19 standard states: “Control reliability of electrical, electronic, or pneumatic systems frequently consists of multiple, independent parallel or series circuitry or components so arranged that any single failure ... either sends a stop command to the machine tool or prevents a successive cycle from being initiated.”

In a functional Category 0 emergency stop circuit, opening of the E-Stop switch contact(s) immediately removes power from the machine control elements, which react to arrest machine hazards. The model ES-FA-6G Stop Safety Module is designed for use with a 1-channel E-stop switch (see *Figure 2* (p. 4) and *Dimensions* (p. 6)). A 1-channel E-stop switch has one contact.

The customer-supplied E-stop switch must be a positive-opening device. This means that its contact will open when the actuator is pushed with a certain minimum force, even if that contact was welded in the closed state.

As shown in the *Wiring Diagram* (p. 3), the E-stop switch becomes an input to the E-Stop Safety Module. A short circuit between the two wires which connect the E-Stop switch to the E-Stop Safety Module results in an unsafe condition. To reduce the possibility of a short circuit, the wires connecting the E-stop switch to the E-stop Safety Module must be physically separated from each other and run in separate wireways or conduit.

The output of the E-Stop Safety Module consists of three redundant output switching channels, each of which is the series connection of two forced-guided relay contacts (K1 and K2 in the *Wiring Diagram* (p. 3)).

ПРОМЭЛЕКТРОНИКА/ sales@prom-elec.com

As recommended by the control reliability section of ANSI B11.19, relays K1 and K2 in the output circuit of the E-Stop Safety Module have mechanically linked contacts which allow the Safety Module circuitry to monitor the contacts of K1 and K2 for failure. If the Safety Module detects failure of any contact of the output relays, the Safety Module output is disabled and cannot be reset.

The E-Stop Safety Module also provides a necessary reset function. ANSI B11 and NFPA 79 standards require that a reset routine be performed after returning the E-stop switch to its closed-contact position. This prevents the controlled machinery from restarting by simply closing the E-stop switch. Model ES-FA-6G may be configured for automatic reset by connecting terminals Y1 and Y2 together (see *Wiring Diagram* (p. 3)). The automatic reset mode is useful for some automated processes. However, when automatic reset is used, an alternate means must be established to require a reset routine after the E-stop switch is returned to its closed contact position (see Warning in the section *Connection of Reset Switch* (p. 4)).

The three switching output circuits of the E-Stop Safety Module are rated for up to 250 V ac at up to 6 amps. A normally closed non-safety auxiliary contact (between terminals #41 and 42) provides a monitoring signal for a process controller. This auxiliary contact is closed when the output circuits are open, and it is open when the output circuits are closed.

This E-stop Safety Module complies with the following design standards:

UL991 Tests for Safety Related Control Employing Solid-state Devices

ISO 13850 (EN 418) Emergency Stop Devices, Functional Aspects – Principles for Design

EN ISO 13849-1 Safety-Related Parts of Control Systems

The Safety Module has indicators for input power and output relay contact status (K1 and K2); see *Figure 1* (p. 2). There are no adjustments and no user-serviceable parts. See *Repairs* (p. 5) for more information regarding repair service.

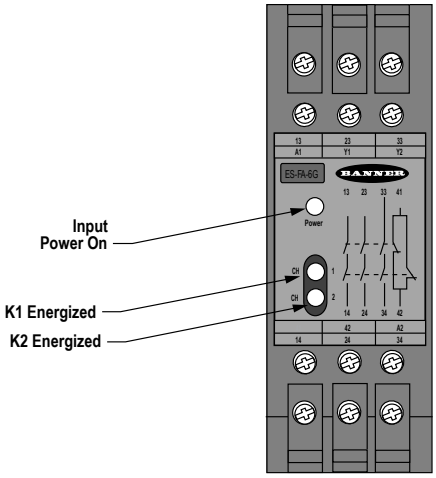

Figure 1. ES-FA-6G Status Indicators

E-Stop Switch Requirements

As shown in *Figure 2* (p. 4) and *Dimensions* (p. 6), the E-stop switch must provide one contact which is closed when the switch is in the armed position. Once activated, the E-stop switch must open this contact. The switch may be returned to the closed-contact position only by a deliberate action (such as twisting, pulling, or unlocking). Additionally, NFPA79 section 13.2, Emergency Stop Devices, specifies the following switch (or stop control) requirements:

- Emergency Stop push buttons shall be located at each operator control station and at other operating stations where emergency shutdown shall be required
- Stop and Emergency Stop push buttons shall be continuously operable from all control and operating stations where located
- Actuators of Emergency Stop devices shall be colored red. The background immediately around the device actuator shall be colored yellow. The actuator of a push-button-operated device shall be of the palm or mushroom-head type
- The Emergency Stop actuator shall be a self-latching type

Note: Some applications may have additional requirements. The user must refer to all relevant regulations.

Mechanical Installation

The ES-FA-6G must be installed inside an enclosure.

The Safety Module is not designed for exposed wiring. It is the user's responsibility to house the ES-FA-6G in an enclosure with NEMA 3 (IEC IP54) rating, or better. The ES-FA-6G mounts directly to standard 35 mm DIN rail.

Heat Dissipation Considerations: For reliable operation, ensure that the operating specifications are not exceeded. The enclosure must provide adequate heat dissipation, so that the air closely surrounding the ES-FA-6G does not exceed the maximum operating temperature stated in the Specifications. Methods to reduce heat build-up include venting, forced airflow (for example, exhaust fans), adequate enclosure exterior surface area, and spacing between modules and other sources of heat.

Electrical Installation

It is not possible to give exact wiring instructions for a Safety Module that interfaces to a multitude of machine control configurations. The following guidelines are general in nature.

The ES-FA-6G has no delay function. Its output relay contacts open within **35 milliseconds** after the E-stop switch contact opens. This classifies the Safety Module as a functional stop Category 0 control, as defined by ANSI NFPA 79 and IEC/EN 60204-1.

WARNING:
- **Risk of electric shock**
- Use extreme caution to avoid electrical shock. Serious injury or death could result.
- Always disconnect power from the safety system (for example, device, module, interfacing, etc.), guarded machine, and/or the machine being controlled before making any connections or replacing any component. Lockout/tagout procedures might be required. Refer to OSHA 29CFR1910.147, ANSI Z244-1, or the applicable standard for controlling hazardous energy.
- Make no more connections to the device or system than are described in this manual. Electrical installation and wiring must be made by a Qualified Person[1] and must comply with the applicable electrical standards and wiring codes, such as the NEC (National Electrical Code), ANSI NFPA79, or IEC 60204-1, and all applicable local standards and codes.

Wiring Diagram

WARNING:
- **Properly install arc or transient suppressors**
- Failure to follow these instructions could result in serious injury or death.
- Install any suppressors as shown across the coils of the machine primary control elements. Do not install suppressors directly across the output contacts of the safety or interface module. In such a configuration, it is possible for suppressors to fail as a short circuit.

WARNING:
- **Interfacing safety outputs**
- Failure to follow these instructions could result in serious injury or death.
- Never wire or interface an intermediate device (PLC, PES, PC) that can fail in such a manner that there is a loss of the safety stop command to the master primary control element(s).

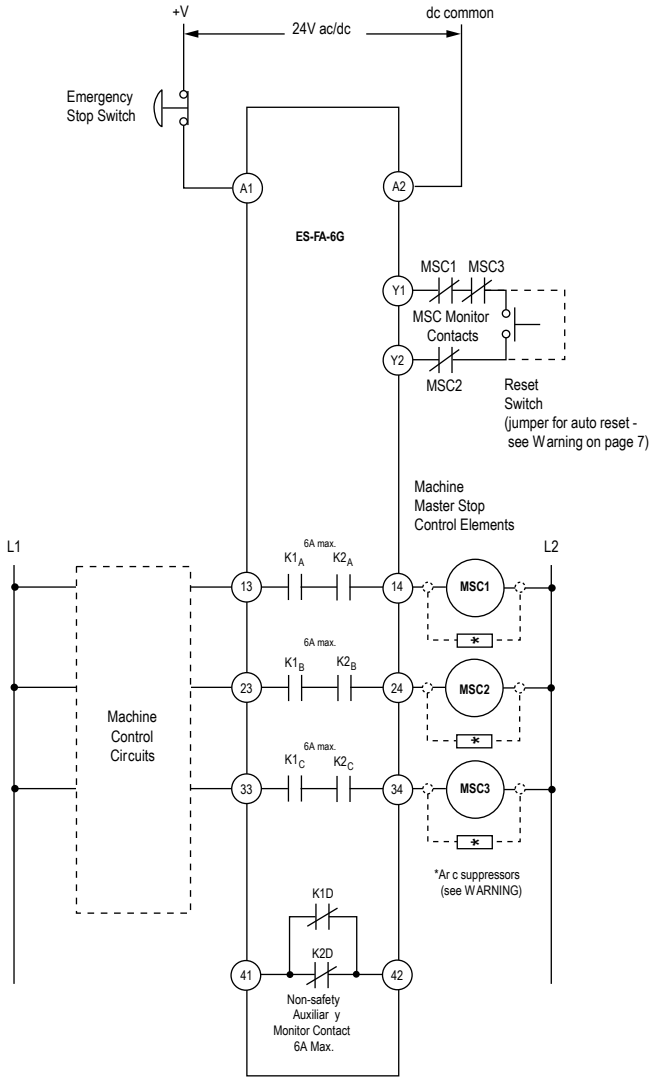

[1] A person who, by possession of a recognized degree or certificate of professional training, or who, by extensive knowledge, training and experience, has successfully demonstrated the ability to solve problems relating to the subject matter and work.

Connection of E-Stop Switch

Connect the poles of the E-stop switches as shown in the *Wiring Diagram* (p. 3). The switches in the *Wiring Diagram* (p. 3) are shown in the armed position with both contacts closed. Multiple E-stop switches connected to one E-stop Safety Module must be series connected (see *Figure 2* (p. 4) and the warning in *Connection of Multiple Switches* (p. 4)).

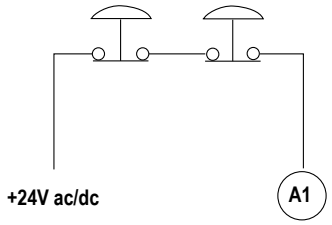

Figure 2. Series Connection of Multiple E-stop Switches

Connection of Multiple Switches

Multiple enabling devices connected to one safety module must be series connected (see wiring diagram and the following warning).

WARNING: Multiple Switching Devices

Whenever two or more devices are connected to the same safety module (controller):

- **Contacts of the corresponding pole of each switch must be connected together in series. *Never connect the contacts of multiple switches in parallel.*** Such a parallel connection defeats the switch contact monitoring ability of the Module and creates an unsafe condition which could result in serious injury or death.
- **Each device must be individually actuated (engaged), then released (or re-armed) and the safety module reset.** This allows the module to check each switch and its wiring to detect faults.

This check must be performed during the prescribed checkouts. **Failure to test each device individually in this manner could result in undetected faults and create an unsafe condition which could result in serious injury or death.**

Connection to the Machine to be Controlled

The machine hookup diagram shows a generic connection of the Safety Module's redundant output circuits to the master stop control elements (MSCs). An MSC is defined as an electrically powered device, external to the Safety Module, which stops the machinery being controlled by immediately removing electrical power to the machine and (when necessary) by applying braking to dangerous motion. This stopping action is accomplished by removing power to the actuator of either MSC.

External Device Monitoring

To satisfy the requirements of Control Reliability (OSHA and ANSI), Category 3 and 4 of ISO 13849-1, the master stop control elements (MSCs) must each offer a normally closed, forced-guided (mechanically linked) monitor contact. Connect one normally closed monitor contact from each master stop control element as shown in the single-channel wiring diagrams.

In operation, if one of the switching contacts of either MSC fails in the energized condition, the associated monitor contact will remain open. Therefore, it will not be possible to reset the Safety Module. If no MSC-monitor contacts are monitored, a jumper must be installed as shown in the wiring diagrams. It is the user's responsibility to ensure that any single failure will not result in a hazardous condition and will prevent a successive machine cycle.

Connection of Reset Switch

The reset circuit switch can be any mechanical switch, such as a normally open momentary switch, or a two-position key switch. The reset switch must be capable of reliably switching 12 V dc to 18 V dc at 40 mA to 100 mA. As shown in the wiring diagrams, the reset switch connects between Safety Module terminals Y1 and Y2.

The reset switch must be located outside of – and not be accessible from – the area of dangerous motion, and must be positioned so that any area of dangerous motion may be observed by the switch operator during the reset procedure. See warning below.

WARNING: Reset Switch Location

All reset switches must be accessible only from outside, and in full view of, the hazardous area. Reset switches must also be out of reach from within the safeguarded space, and must be protected against unauthorized or inadvertent operation (for example, through the use of rings or guards). If any areas are not visible from the reset switch(es), additional means of safeguarding must be provided. **Failure to follow these instructions could result in serious injury or death.**

Automatic Reset Mode

The Safety Module may be configured (via wiring) for automatic reset. If no MSC contacts are monitored, install a jumper between terminals Y1 and Y2 (see wiring diagrams). The Safety Module will reset (and its outputs energize) as soon as the switch returns to its armed (closed-contact) position.

Automatic reset is useful for some automated processes. **However, if automatic reset is used, it is necessary to provide a means of preventing resumption of hazardous machine motion, until an alternate reset procedure is performed.** The alternate procedure must include a reset/restart switch, located outside the area of dangerous motion and positioned so that any area of dangerous motion may be observed by the switch operator during the reset procedure. See Warning.

Note: The MSC monitor contacts must remain in a series connection between Y1 and Y2. DO NOT install a jumper wire directly between Y1 and Y2.

WARNING:
- **Reset routine required**
- Failure to prevent the machine from restarting without actuating the normal start command/device can create an unsafe condition that could result in serious injury or death.
- Do not allow the machine to restart without actuating the normal start command/device. Perform the reset routine after clearing the cause of a stop condition, as required by U.S. and international standards.

Connection to Auxiliary Monitor Contact

The action of the auxiliary monitor contact, 41–42, inversely follows the action of output contacts 13–14, 23–24, and 33–34 when power is applied to the E-stop Safety Module. The contact 41–42 is open when the three normally open output contacts are closed, and vice versa. The 41–42 auxiliary monitor contact is to be used only for control functions that are NOT safety-related. A typical use is to communicate the status of the Safety Module output to a programmable logic controller (PLC). The switching capacity of the 41–41 auxiliary monitor contact is 250 V ac/dc maximum at 6 A maximum (see *Specifications* (p. 6)).

Initial Checkout Procedure

1. Remove power from the machine control elements.
2. Activate the E-stop switch (open its contact).
3. Apply power to one side of the E-stop switch.
   No indicator should be ON at this time. If any of the three indicators is ON, disconnect the power to the E-stop switch, then check all wiring and the E-stop switch. Return to step 2 after the cause of the problem has been corrected.
4. Arm the E-stop switch (close its contact.)
   The Power LED must come ON.
5. If configured for:
   - Automatic reset: K1 and K2 indicators should come ON, and the safety output contacts should close.
   - Manual reset: close the Reset switch. The K1 and K2 indicators should come ON. Open the Reset switch. The K1 and K2 indicators should both stay ON. If none or only one of the two K1 or K2 indicators comes ON, check the wiring. If the wiring is OK, the unit has an internal fault.
6. Activate the E-stop switch (open its contact).
   The K1 and K2 indicators should turn OFF simultaneously. If either indicator is not OFF, disconnect the input power and check all wiring. Return to step 2 after the cause of the problem has been corrected.
7. Close the enclosure.
8. Apply power to the Machine Control Elements and perform the Periodic Checkout Procedure.

Note: If more than one E-stop switch is series-connected to one E-stop Safety Module, the above checkout procedure must be run individually for EACH switch.

CAUTION:
- **Disconnect power prior to checkout**
- Dangerous voltages might be present along the module wiring barriers whenever power to the machine control elements is on.
- Before performing the initial checkout procedure, disconnect all power from the machine to be controlled. Exercise extreme caution whenever machine control power is or might be present. Always disconnect power to the machine control elements before opening the enclosure housing of the module.

Periodic Checkout Procedure

The functioning of the E-stop system must be verified on a regular periodic basis to ensure proper operation (see also the machine manufacturer's recommendations).

1. With the machine running, engage the E-stop switch (open its contact). Verify that the machine stops.
2. Return the E-stop switch to its closed-contact position. Verify that the machine does not start.
3. Close and then open the Reset switch (if using manual reset mode). Verify that the machine restarts.

Note: If two or more E-stop switches are series-connected to one E-stop Safety Module, this test must be individually run for EACH switch.

Repairs

Contact Banner Engineering for troubleshooting of this device. **Do not attempt any repairs to this Banner device; it contains no field-replaceable parts or components.** If the device, device part, or device component is determined to be defective by a Banner Applications Engineer, they will advise you of Banner's RMA (Return Merchandise Authorization) procedure.

Important: If instructed to return the device, pack it with care. Damage that occurs in return shipping is not covered by warranty.

WARNING:
- **Do not abuse the module after failure**—If an internal fault has occurred and the module will not reset, do not tap, strike, or otherwise attempt to correct the fault with a physical impact to the housing.
- Failure to follow these instructions could result in serious injury or death.
- An internal relay might have failed in such a manner that its replacement is required. If the module is not immediately replaced or repaired, multiple simultaneous failures might accumulate such that the safety function cannot be guaranteed.

Specifications

Supply Voltage and Current
24 V ac/dc, ±10%; 50/60 Hz
Power consumption: approx. 2 W/0.75 VA

Supply Protection Circuitry
Protected against reverse polarity and transient voltages

Output Configuration
Outputs (K1 and K2): three redundant (total of six) safety relay (forced-guided) contacts - $AgSnO_2$ and one auxiliary non-safety monitor output (open when both K1 and K2 are energized; closed when either K1 or K2 are de-energized)
Contact ratings:
- Maximum voltage: 250 V ac or 250 V dc
- Maximum current: 6 A ac or 6 A dc
- Minimum current: 30 mA at 10 V dc
- Maximum power: 1500 VA, 150 W
- Mechanical life: 10,000,000 operations
- Electrical life: 100,000 at full resistive load

Note: Transient suppression is recommended when switching inductive loads. Install suppressors across load. Never install suppressors across output contacts (see warning in section titled *Wiring Diagram* (p. 3)).

Output Response Time
35 milliseconds typical

Input Requirements
E-stop switch must have a normally closed contact capable of switching 40 mA to 100 mA at 13 V ac/dc to 27 V ac/dc. Reset switch must have one normally open contact capable of switching 20 mA to 30 mA at 13 V ac/dc to 27 V ac/dc.

Status Indicators
Three green LED indicators:
- Power ON
- K1 energized
- K2 energized

Housing
Polycarbonate. Rated NEMA 1; IEC IP40, Terminals IP20.

Mounting
Mounts to standard 35 mm DIN rail track. The Safety Module must be installed inside an enclosure rated NEMA 3 (IEC IP54), or better.

Vibration Resistance
Vibration: 10 Hz to 55 Hz, 0.35 mm displacement per IEC 60068-2-6

Operating Conditions
Temperature: 0 °C to +50 °C (+32 °F to +122 °F)
90% at +50 °C maximum relative humidity (non-condensing)

Dimensions

All measurements are listed in millimeters [inches], unless noted otherwise.

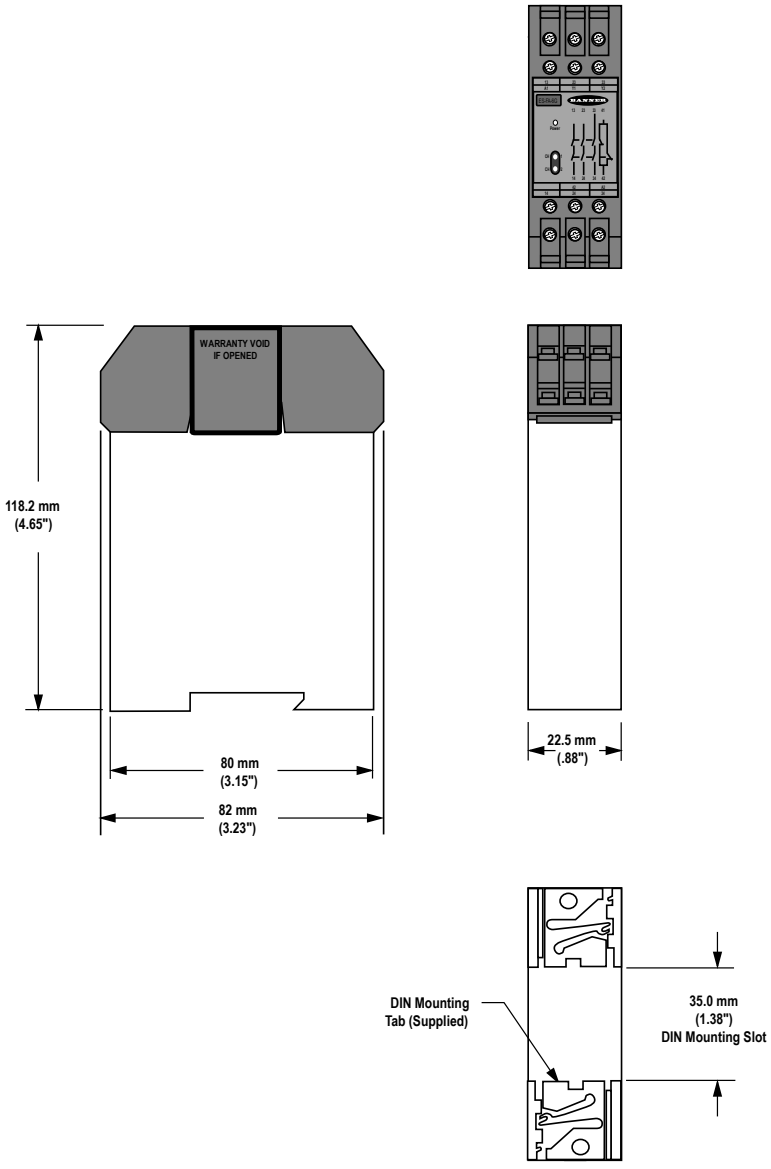

Banner Engineering Corp Limited Warranty

Banner Engineering Corp. warrants its products to be free from defects in material and workmanship for one year following the date of shipment. Banner Engineering Corp. will repair or replace, free of charge, any product of its manufacture which, at the time it is returned to the factory, is found to have been defective during the warranty period. This warranty does not cover damage or liability for misuse, abuse, or the improper application or installation of the Banner product.

THIS LIMITED WARRANTY IS EXCLUSIVE AND IN LIEU OF ALL OTHER WARRANTIES WHETHER EXPRESS OR IMPLIED (INCLUDING, WITHOUT LIMITATION, ANY WARRANTY OF MERCHANTABILITY OR FITNESS FOR A PARTICULAR PURPOSE), AND WHETHER ARISING UNDER COURSE OF PERFORMANCE, COURSE OF DEALING OR TRADE USAGE.

This Warranty is exclusive and limited to repair or, at the discretion of Banner Engineering Corp., replacement. **IN NO EVENT SHALL BANNER ENGINEERING CORP. BE LIABLE TO BUYER OR ANY OTHER PERSON OR ENTITY FOR ANY EXTRA COSTS, EXPENSES, LOSSES, LOSS OF PROFITS, OR ANY INCIDENTAL, CONSEQUENTIAL OR SPECIAL DAMAGES RESULTING FROM ANY PRODUCT DEFECT OR FROM THE USE OR INABILITY TO USE THE PRODUCT, WHETHER ARISING IN CONTRACT OR WARRANTY, STATUTE, TORT, STRICT LIABILITY, NEGLIGENCE, OR OTHERWISE.**

Banner Engineering Corp. reserves the right to change, modify or improve the design of the product without assuming any obligations or liabilities relating to any product previously manufactured by Banner Engineering Corp. Any misuse, abuse, or improper application or installation of this product or use of the product for personal protection applications when the product is identified as not intended for such purposes will void the product warranty. Any modifications to this product without prior express approval by Banner Engineering Corp will void the product warranties. All specifications published in this document are subject to change; Banner reserves the right to modify product specifications or update documentation at any time. Specifications and product information in English supersede that which is provided in any other language. For the most recent version of any documentation, refer to: *www.bannerengineering.com*.

For patent information, see *www.bannerengineering.com/patents*.

© Banner Engineering Corp. All rights reserved